626 679 3588
cleo@trendytotesinc.com
162 Atlantic St, Pomona, CA 91768

NTQ®
Better Life Together

DIMENSION DETAILS

BATHROOM VANITY TOP

MODEL NFX54-BY3K8

cleo@trendytotesinc.com
626 679 3588

SCAN ME
PRODUCT INSTRUCTION VIDEO

TOP VIEW

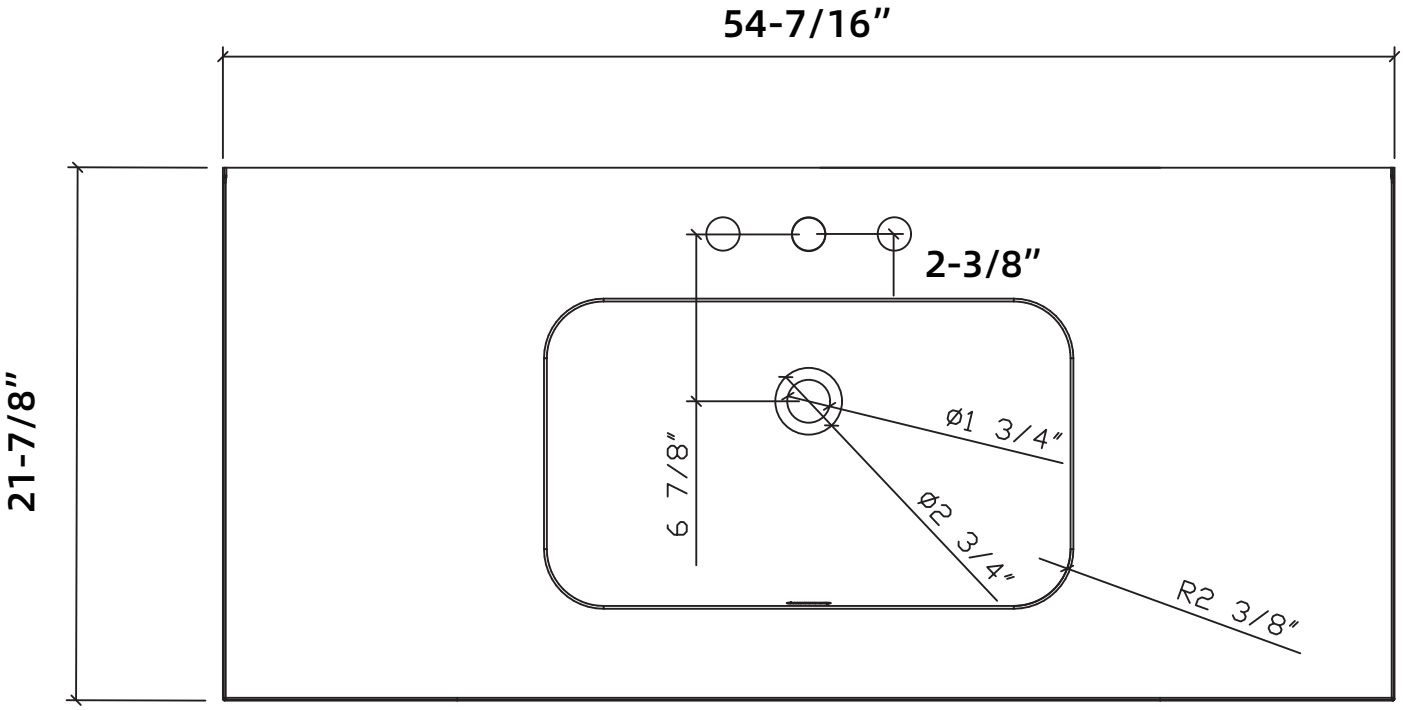

FRONT VIEW

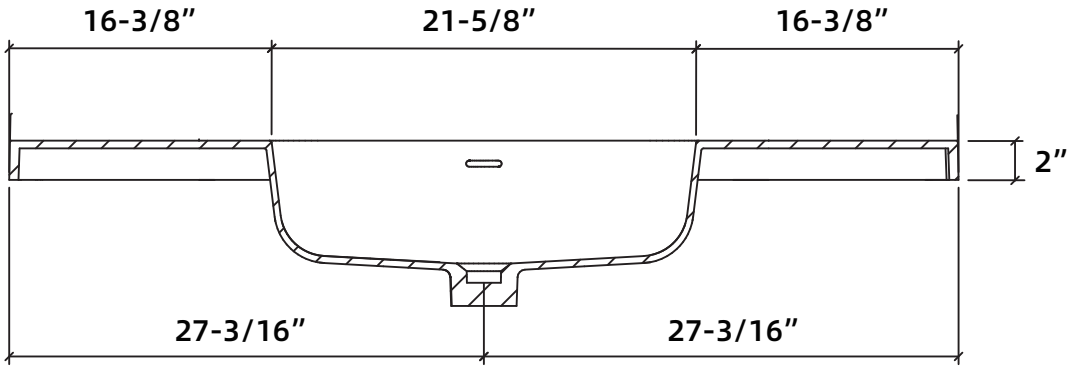

SIDE VIEW

