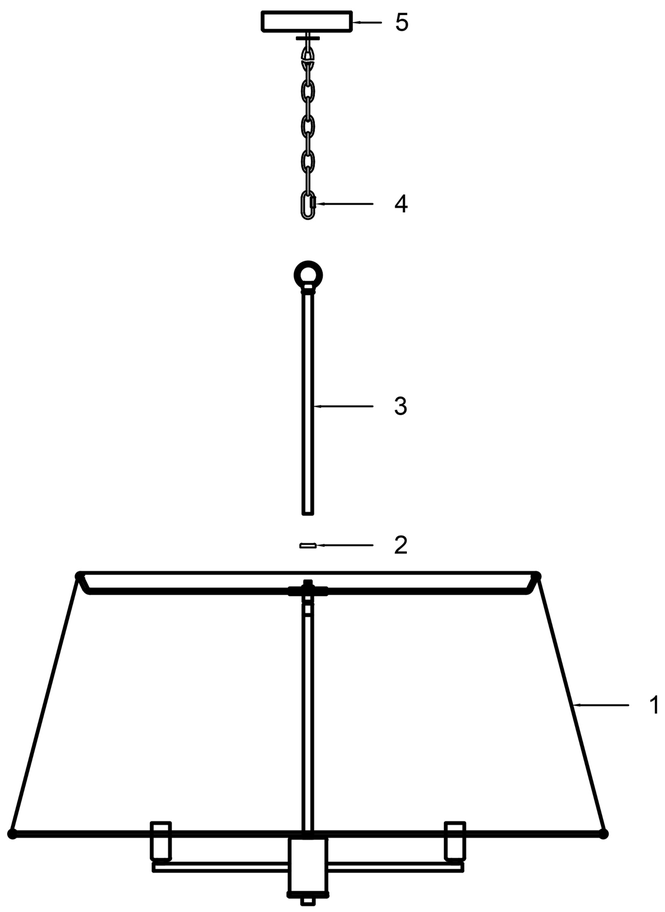

1. Put the nut (2) through the dental tube and twist it on the lamp body (1) with the chain ring (3). Then, the lamp body (1) is connected to the chain (5) with the buckle (4).

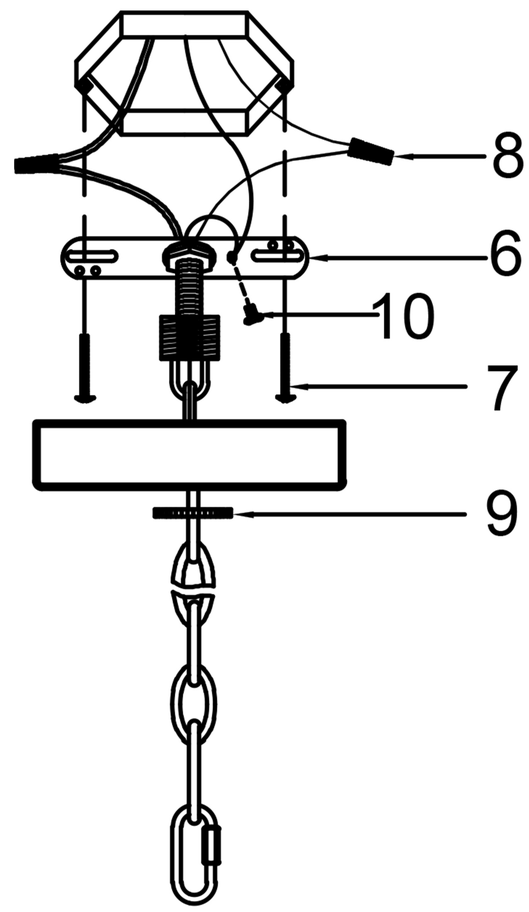

2. Install the mounting plate (6) on the junction box with screws (7).
3. Connect the upper outlet cable of the junction box to the wiring cap (8) of the lamp body.
4. Tighten the mounting plate and the canopy with the ring (9).

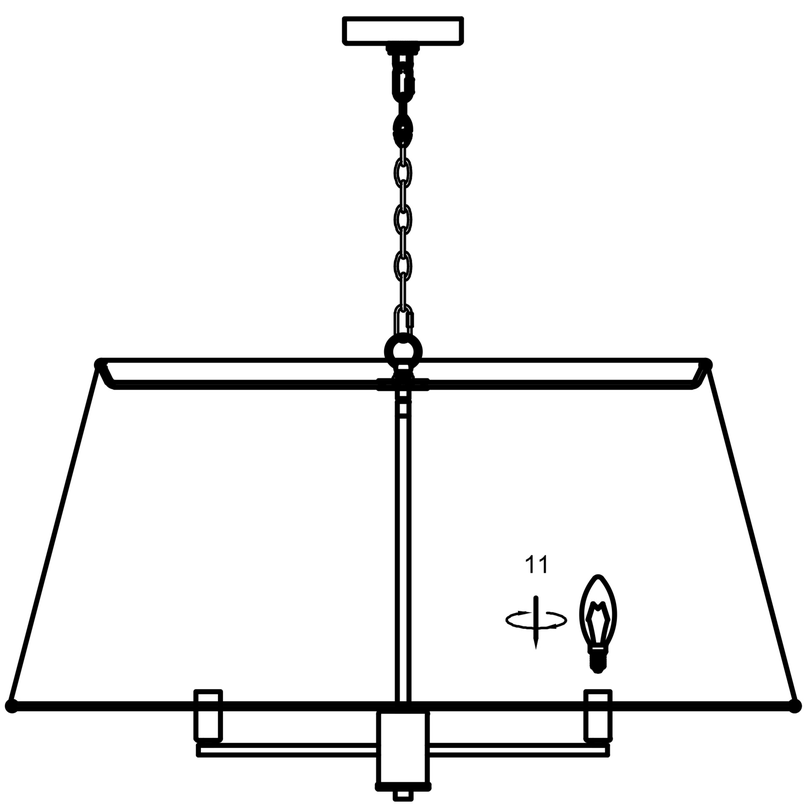

5. Install light bulbs (not included).

Accessories：

1：Lamp Body*1	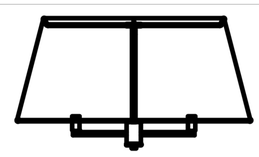
2：Nut*1	
3：Chain Ring*1	
4：Buckle*2	
5：Chain*1	
6：Mounting Plate*1	
7：Screws*2	
8：Wiring Cap*3	
9：Ring*1	
10：Screws*1	

Notice： This light fixture should be installed in accordance with all applicable,local installation codes, and by a person familiar with the construction and operation of it, as well as the hazards involved. Inspect items and contents carefully. If any damage or defect is found, do not install it.