SKU:
LX-TC7093T-HY-BL
LX-TC7093T-HY-WHT
LX-SB7093T-HY-BL01/02
LX-SB7093T-HY-WHT01/02

Twin Loft Bed with Lower Twin Bed Frame, Storage Stairs, Power Outlet and LED Light Strip Assembly Instructions

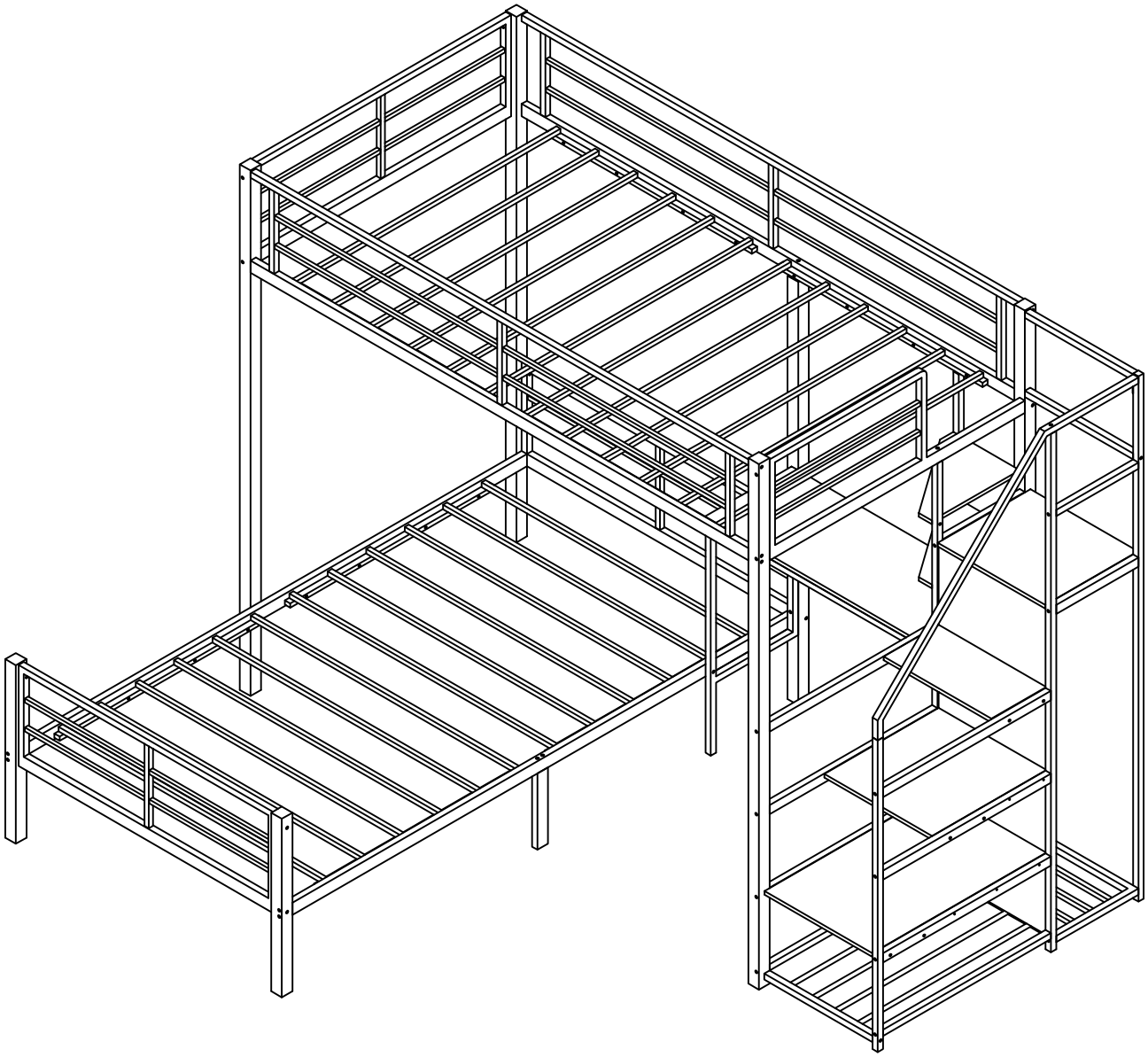

SAFETY WARNINGS AND GENERAL NOTES

1. Follow all warning information on the loft bed frame and shipping carton. Do not remove any warning labels from the bed.
2. Always use the recommended mattress size on the mattress support to help prevent entrapment or falls.
3. Do not allow children under 6 years of age to use the upper bunk.
4. Periodically check the guardrails, stair unit, and all other components to make sure they are in the correct position, free from damage, and that all fasteners are tight.
5. Do not allow horseplay on or under the bed.
6. Do not allow jumping or rough play on the bed.
7. Do not exceed weight capacity. (see product specifications)
8. Mattress must fit securely within the frame.
9. Always secure the bed to the wall using the anti-tip kit.
10. Do not allow more than one person on the upper bunk at a time.
11. Always use the stair unit when entering or leaving the upper bunk.
12. Do not use substitute parts. Contact the manufacturer or dealer for replacement parts only.
13. Using a night light may provide additional safety for anyone using the upper bunk.
14. Always use guardrails on both long sides of the upper bunk.
15. If the loft bed is placed next to a wall, the full-length guardrail should be positioned against the wall to help prevent entrapment between the bed and the wall. The use of water mattresses or sleep flotation mattresses are prohibited.
16. STRANGULATION HAZARD: Never attach or hang items to any part of the loft bed that is not designed for use with the bed, including but not limited to hooks, belts, and jump ropes.
17. Keep these instructions for future reference.
18. We recommend assembling the loft bed on the shipping carton or on a protected surface to help protect your floor or carpet.
19. Make sure all staples are removed from the carton before beginning assembly.
20. Use only the mattress sizes specified below.

Upper Bed Mattress	Lower Bed Mattress
Bed Type: Twin Standard	Bed Type: Twin Standard
Length: 75"	Length: 75"
Width: 38"	Width: 38"
Maximum Thickness: 6" max	Maximum Thickness: 8" max

21. The top surface of the mattress must be at least 5" (127 mm) below the upper edge of the guardrails.
22. Replacement parts, including additional guardrails, may be obtained from the manufacturer or dealer.
23. This product must be secured to a wall using the included anti-tip hardware. Failure to do so may result in serious injury or death.

Before Assembly:
·Check all parts and hardware against the parts list
·Leave all bolts slightly loose until the frame is fully assembled and aligned. Tighten all bolts during the final check.
·Assembly requires 2 adults
·Estimated assembly time: 1–2 hours

ELECTRICAL SAFETY NOTICE:

·This product includes a power outlet module and an LED light strip. Read all electrical safety instructions before use.
·Keep all electrical components away from water, moisture, and heat sources.
·Do not allow children to play with or handle electrical components.
·Adult supervision is recommended when children are using the upper bunk.
·Make sure the power cord is securely fastened to the metal frame as instructed.
·Do not use any electrical component if the cord or plug is damaged.
·Disconnect the power before moving, adjusting, or servicing the bed.
·For indoor use only.
·Do not exceed the rated capacity of the power outlet module. Check the rating label on the power outlet module before use.
·Keep the power cord away from the stair path and any area where it may be stepped on.
·Keep all cords away from walking paths to prevent tripping.

Bed Parts View

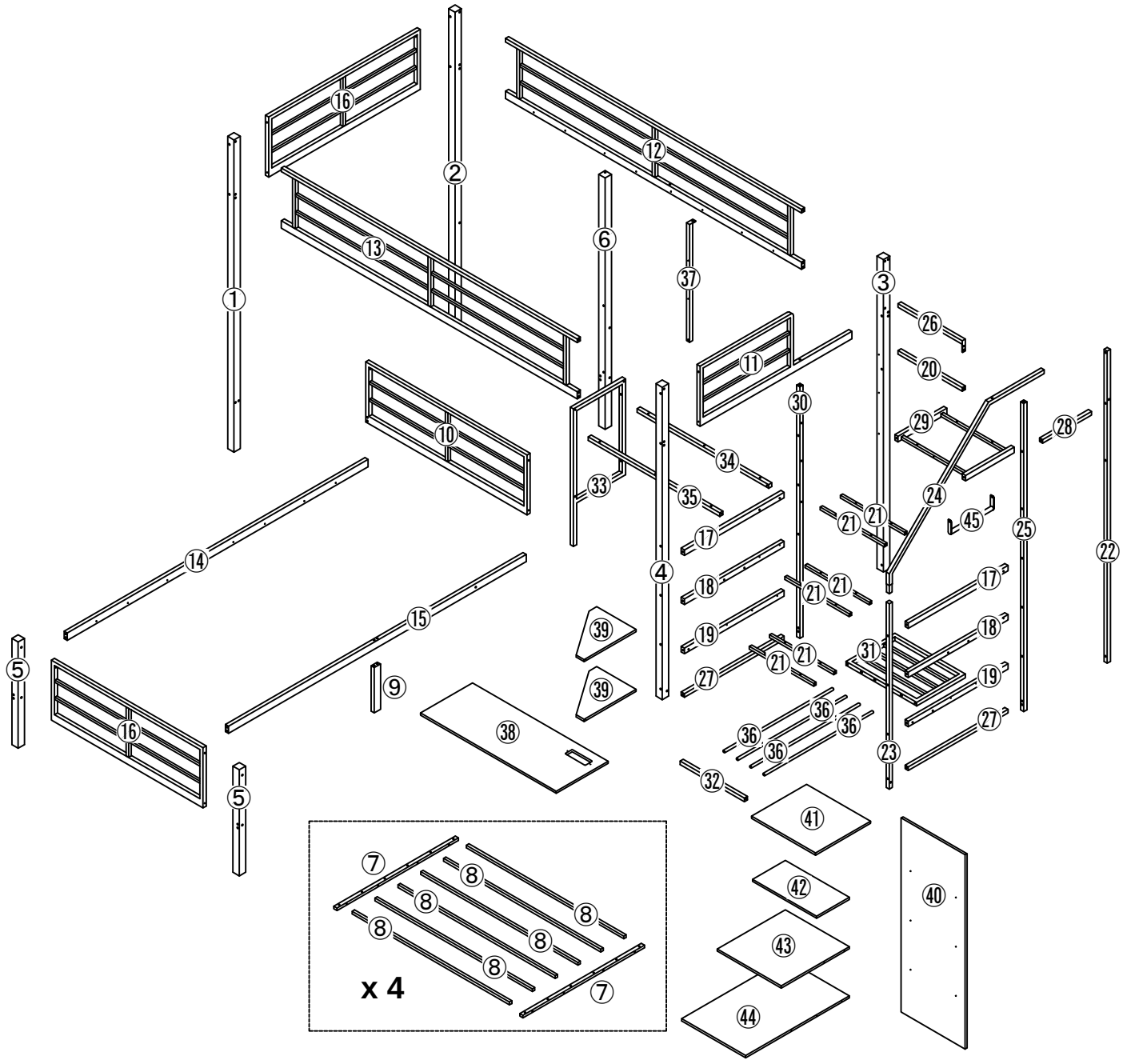

Two adults are recommended for assembly.

A power drill with a hex bit may be used at low speed only. Do not over-tighten.
Hand tightening is recommended for final adjustment.

Part List

①-1pc	②-1pc	③-1pc	④-1pc	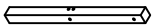 ⑤-2pcs
⑥-1pc	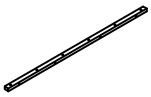 ⑦-8pcs	 ⑧-24pcs	 ⑨-1pc	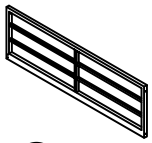 ⑩-1pc
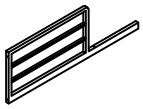 ⑪-1pc	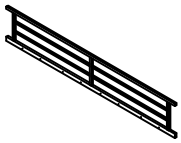 ⑫-1pc	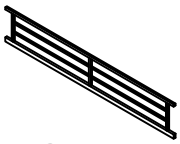 ⑬-1pc	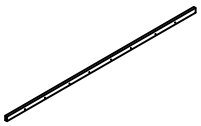 ⑭-1pc	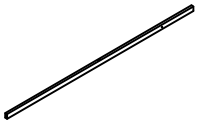 ⑮-1pc
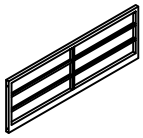 ⑯-2pcs	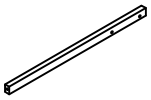 ⑰-2pcs	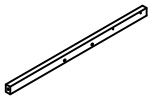 ⑱-2pcs	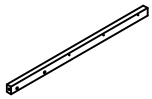 ⑲-2pcs	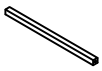 ⑳-1pc
 ㉑-6pcs	㉒-1pc	㉓-1pc	 ㉔-1pc	㉕-1pc
 ㉖-1pc	 ㉗-2pcs	 ㉘-1pc	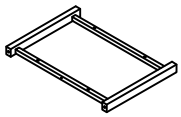 ㉙-1pc	㉚-1pc
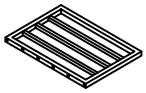 ㉛-1pc	 ㉜-1pc	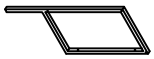 ㉝-1pc	 ㉞-1pc	 ㉟-1pc
 ㊱-4pcs	㊲-1pc	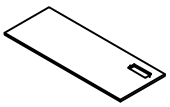 ㊳-1pc	 ㊴-2pcs	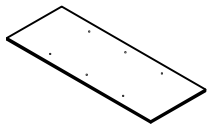 ㊵-1pc
㊶-1pc	㊷-1pc	㊸-1pc	㊹-1pc	㊺-1pc

Hardware List

 M8*60mm Ⓐ-39pcs	 M8*55mm Ⓑ-9pcs	 M8*35mm Ⓒ-28pcs	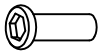 M8*15mm Ⓓ-9pcs	 M6*35mm Ⓕ-15pcs
 M6*28mm Ⓖ-6pcs	 M6*12mm Ⓗ-7pcs	 M6*25mm Ⓘ-64pcs	 M6*55mm Ⓙ-2pcs	 M6*30mm Ⓛ-32pcs
 M5*60mm Ⓜ-22pcs	 M3.5*12mm Ⓟ-2pcs	 M8*35mm Ⓢ-1pc	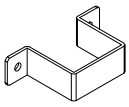 Ⓣ-2pcs	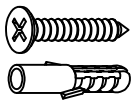 Ⓤ-4sets
 Ø6*30mm Ⓦ-1pc	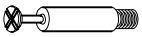 Ⓧ-2pcs	 Ⓨ-2pcs		

Tool List

 M5mm Ⓔ-2pcs	 M4mm Ⓝ-1pc	 M3mm Ⓠ-1pc	 Attention: Please wear gloves during assembly

Electrical Components

 Ⓚ-1pc	 Light Strip Ⓥ-1pc	 Battery not included. The remote control for Light Strip V requires one CR2025 3V lithium coin cell battery before use.  CR2025	

Step 1: Attach Part #16 between Parts #1 and #2 as shown.

Required:
Bolt A M8×60 mm: 2 pcs
Bolt B M8×55 mm: 2 pcs
Bolt D M8×15 mm: 2 pcs
Allen Key E M5: 2 pcs

Do not fully tighten bolts at this stage.

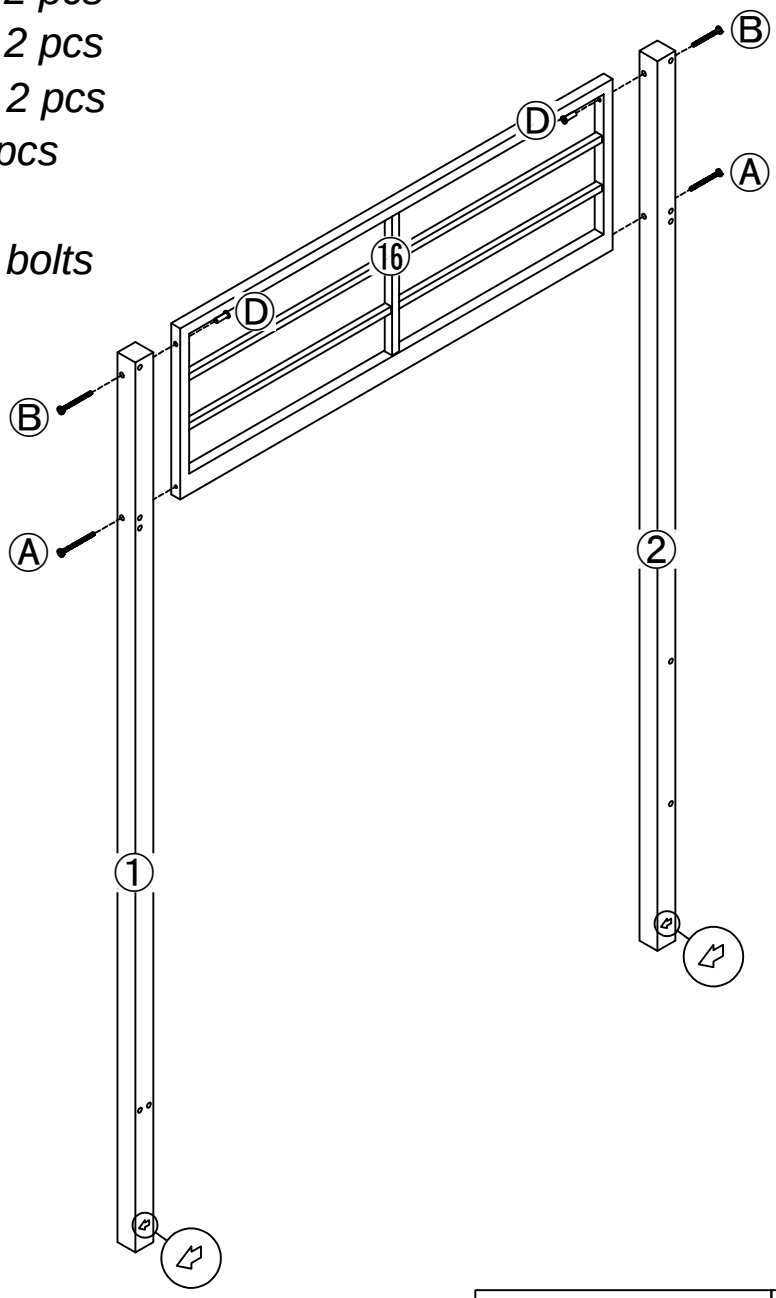

			①-1pc	②-1pc
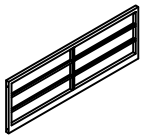 ⑯-1pc	 M8*60mm Ⓐ-2pcs	 M8*55mm Ⓑ-2pcs	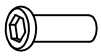 M8*15mm Ⓓ-2pcs	 M5mm Ⓔ-2pcs

Step 2: Assemble the second side frame as shown. Attach Parts #11, #17, #18, #19, #27, and #30 between Parts #3 and #4. Keep all bolts loose until the frame is fully aligned.

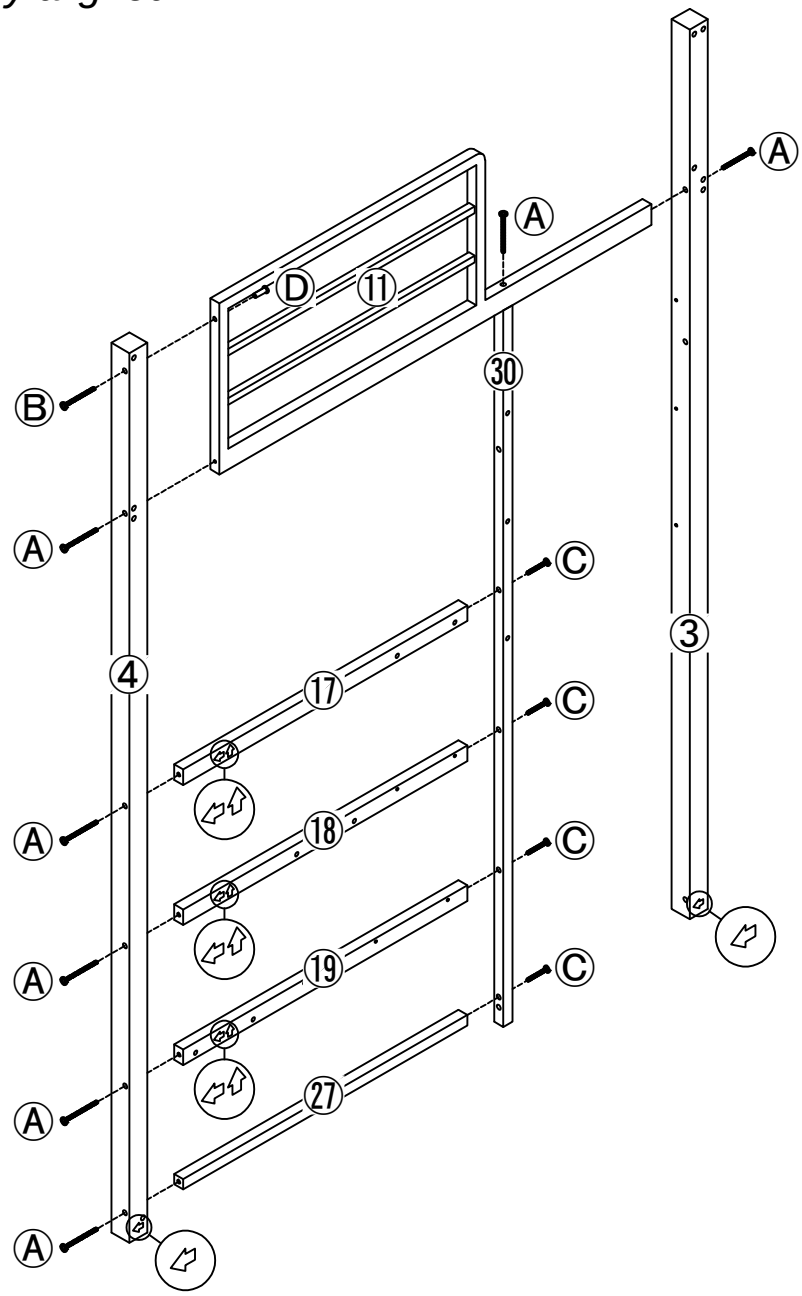

③-1pc				
④-1pc				
⑪-1pc				
⑰-1pc	⑱-1pc	⑲-1pc	㉗-1pc	㉚-1pc
M8*60mm Ⓐ-7pcs	M8*55mm Ⓑ-1pc	M8*35mm Ⓒ-4pcs	M8*15mm Ⓓ-1pc	M5mm Ⓔ-2pcs

Step 3: Attach Parts #12 and #13 to the side frames using Bolts A and Allen Key E.

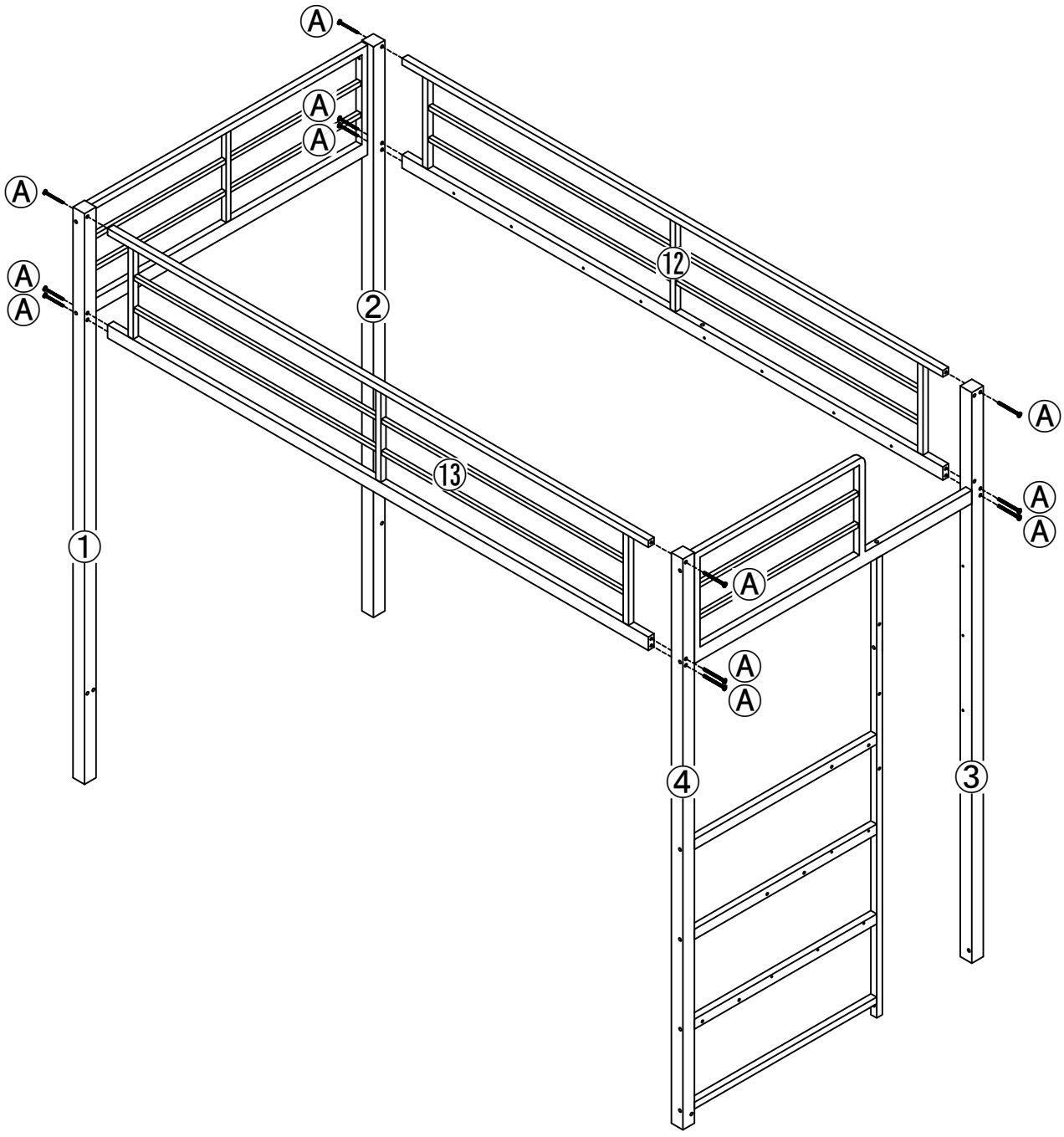

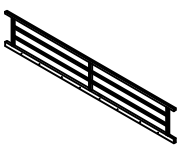	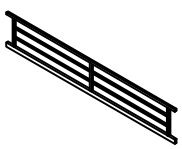		
⑫-1pc	⑬-1pc	M8*60mm Ⓐ-12pcs	M5mm Ⓔ-1pc

Step 4: Attach Parts #6 and #10 to the bed frame using Bolts A, B, and D with Allen Key E.

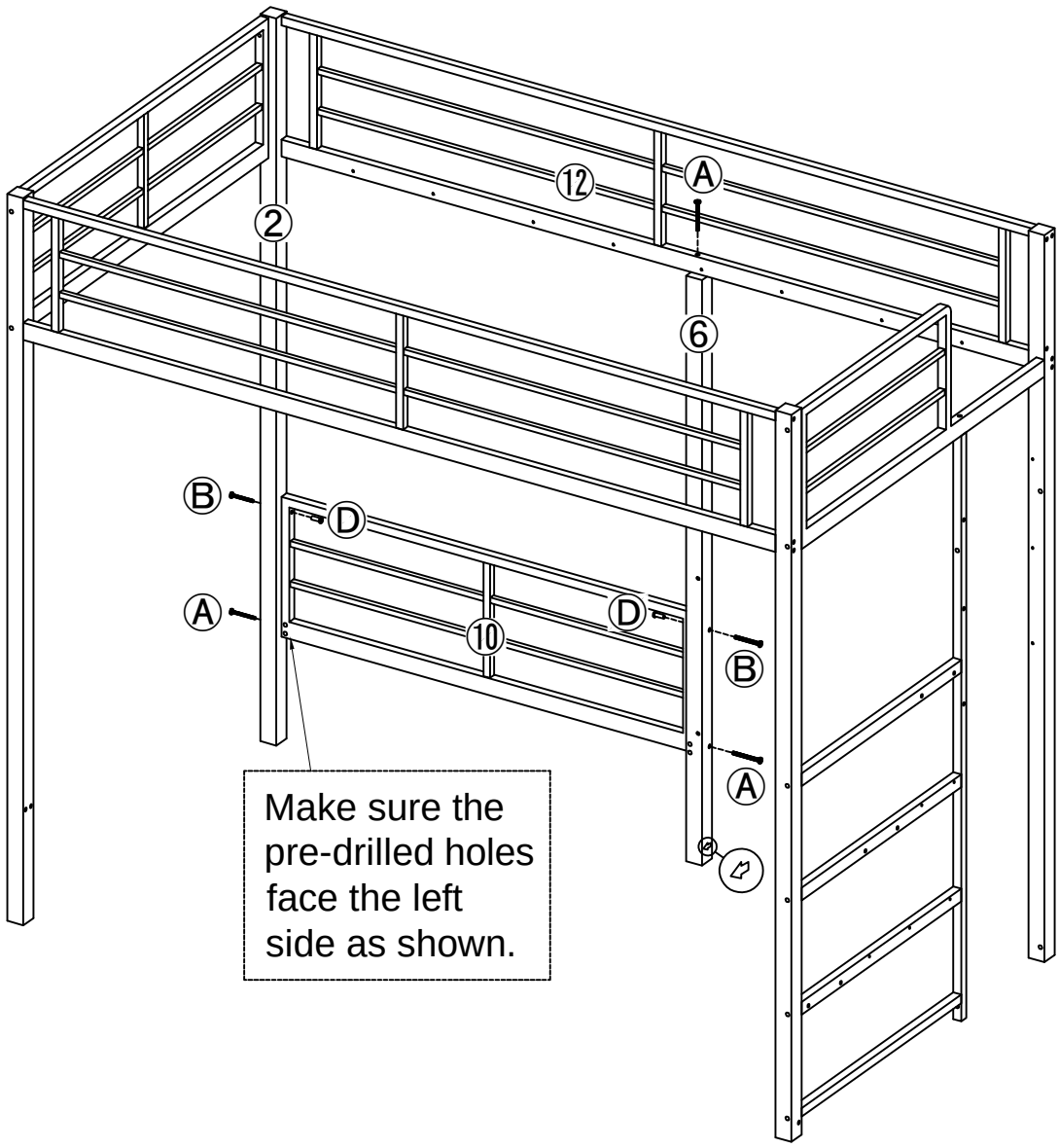

⑥-1pc

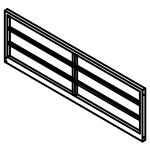			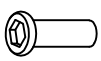	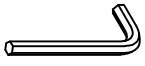
⑩-1pc	M8*60mm Ⓐ-3pcs	M8*55mm Ⓑ-2pcs	M8*15mm Ⓓ-2pcs	M5mm Ⓔ-2pcs

Step 5: Attach the two Parts #5 to Part #16 using Bolts A, B, and D with Allen Key E.

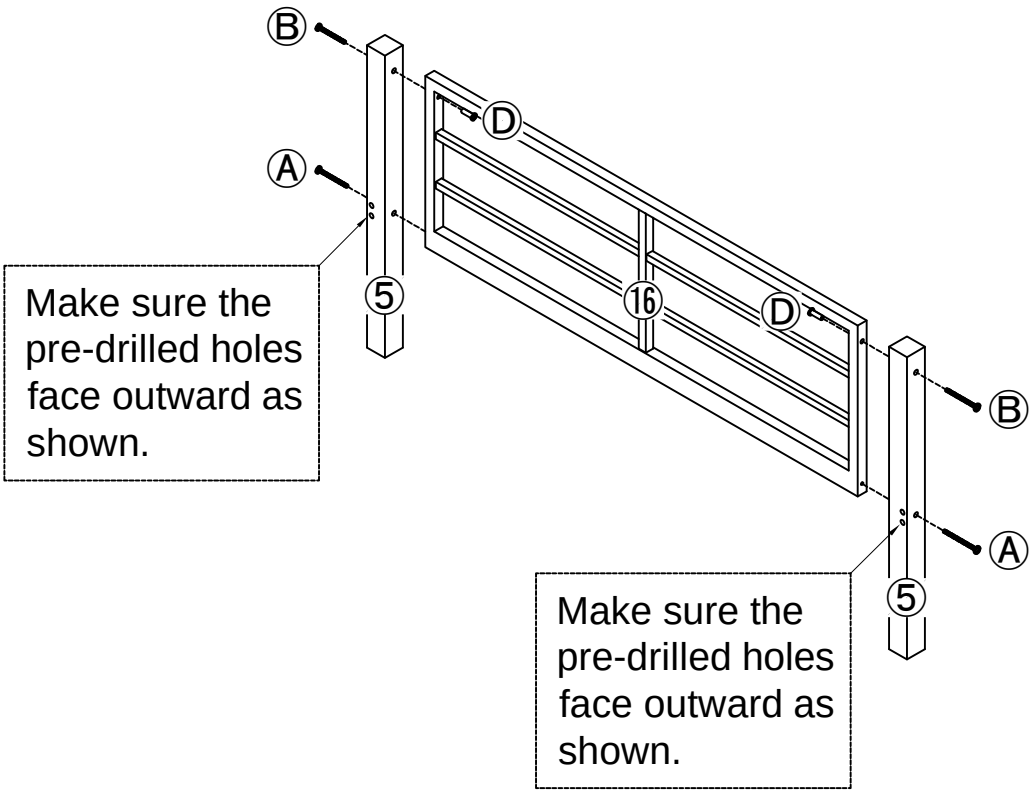

⑤-2pcs				
⑯-1pc	M8*60mm Ⓐ-2pcs	M8*55mm Ⓑ-2pcs	M8*15mm Ⓓ-2pcs	M5mm Ⓔ-2pcs

Step 6: Attach the lower bed frame assembly from Step 5 to the main bed frame. Install Parts #9, #14, and #15 as shown using Bolts A, C and J with Allen Keys E and N.

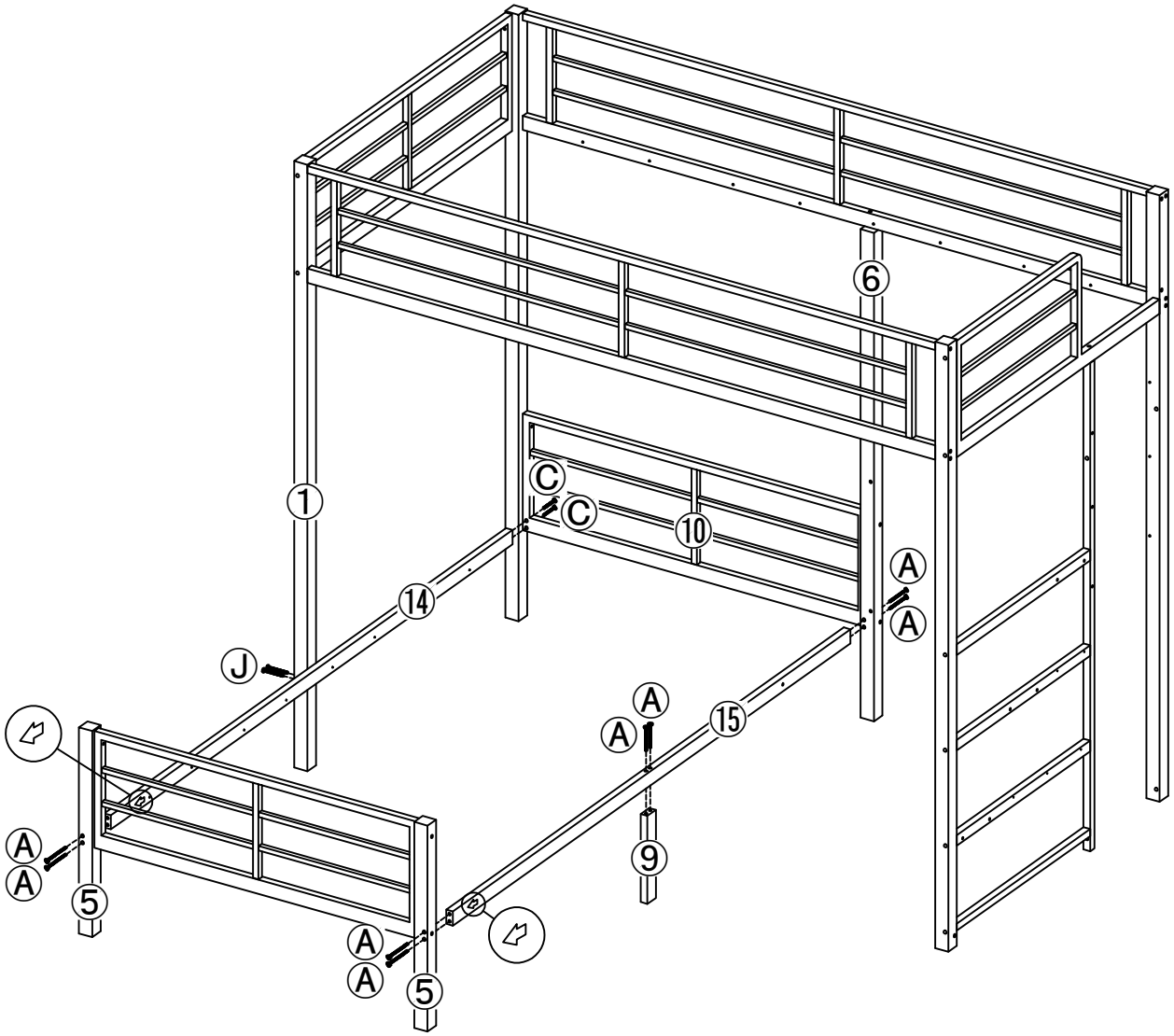

 ⑨-1pc	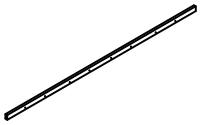 ⑭-1pc	 ⑮-1pc		
 M8*60mm Ⓐ-8pcs	 M8*35mm Ⓒ-2pcs	 M5mm Ⓔ-1pc	 M6*55mm Ⓙ-2pcs	 M4mm Ⓝ-1pc

Step 7: Attach Parts #17, #18, #19, #22, #23, #24, #25, #27 and #28 together using Bolts C and H with Allen Keys E and N.

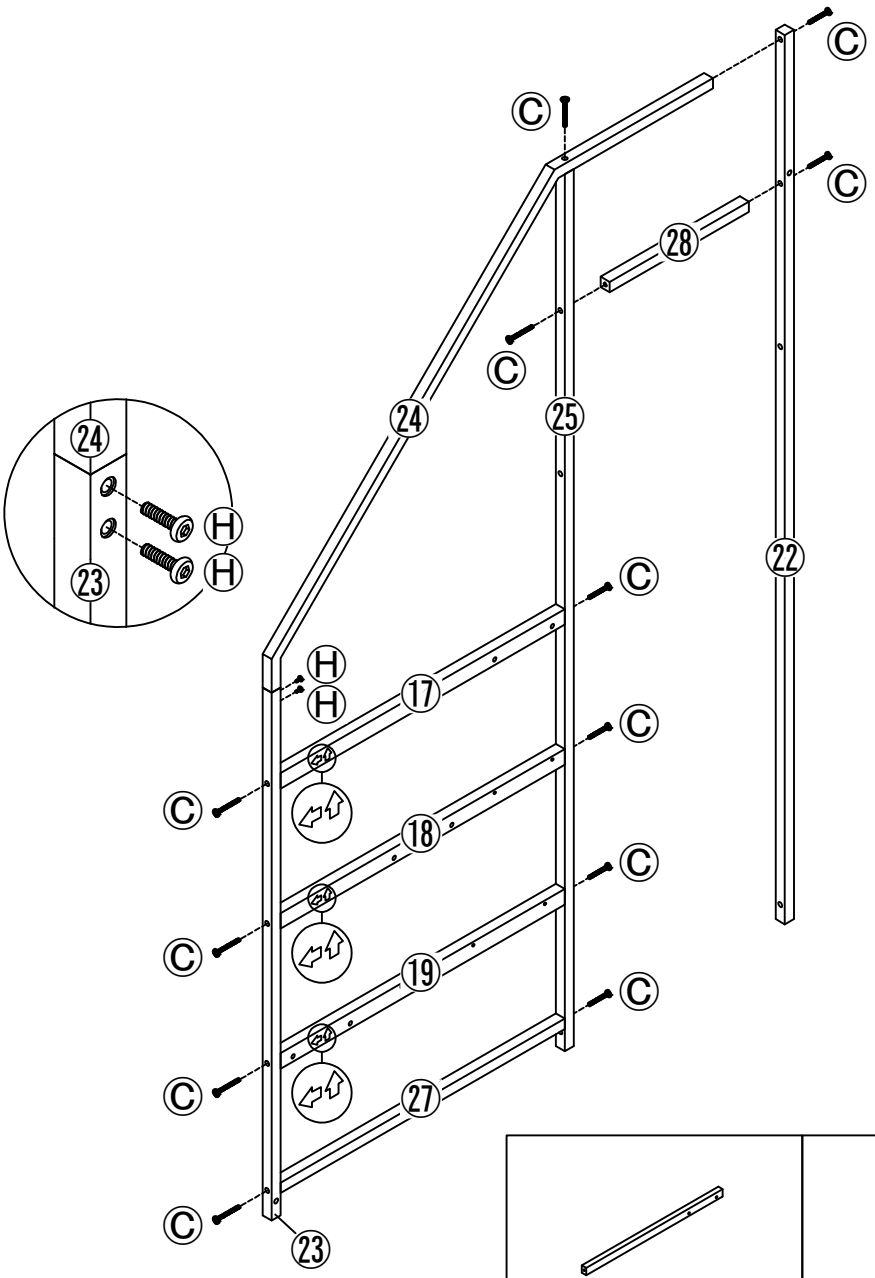

		⑰-1pc	⑱-1pc	⑲-1pc
㉒-1pc	㉓-1pc	㉔-1pc	㉕-1pc	㉗-1pc
㉘-1pc	M8*35mm Ⓒ-12pcs	M5mm Ⓔ-1pc	M6*12mm Ⓗ-2pcs	M4mm Ⓝ-1pc

Step 8: Attach Parts #20, #26, #31, #32 and #36 to the stair unit and bed frame using Bolts A, C and H with Allen Keys E and N.

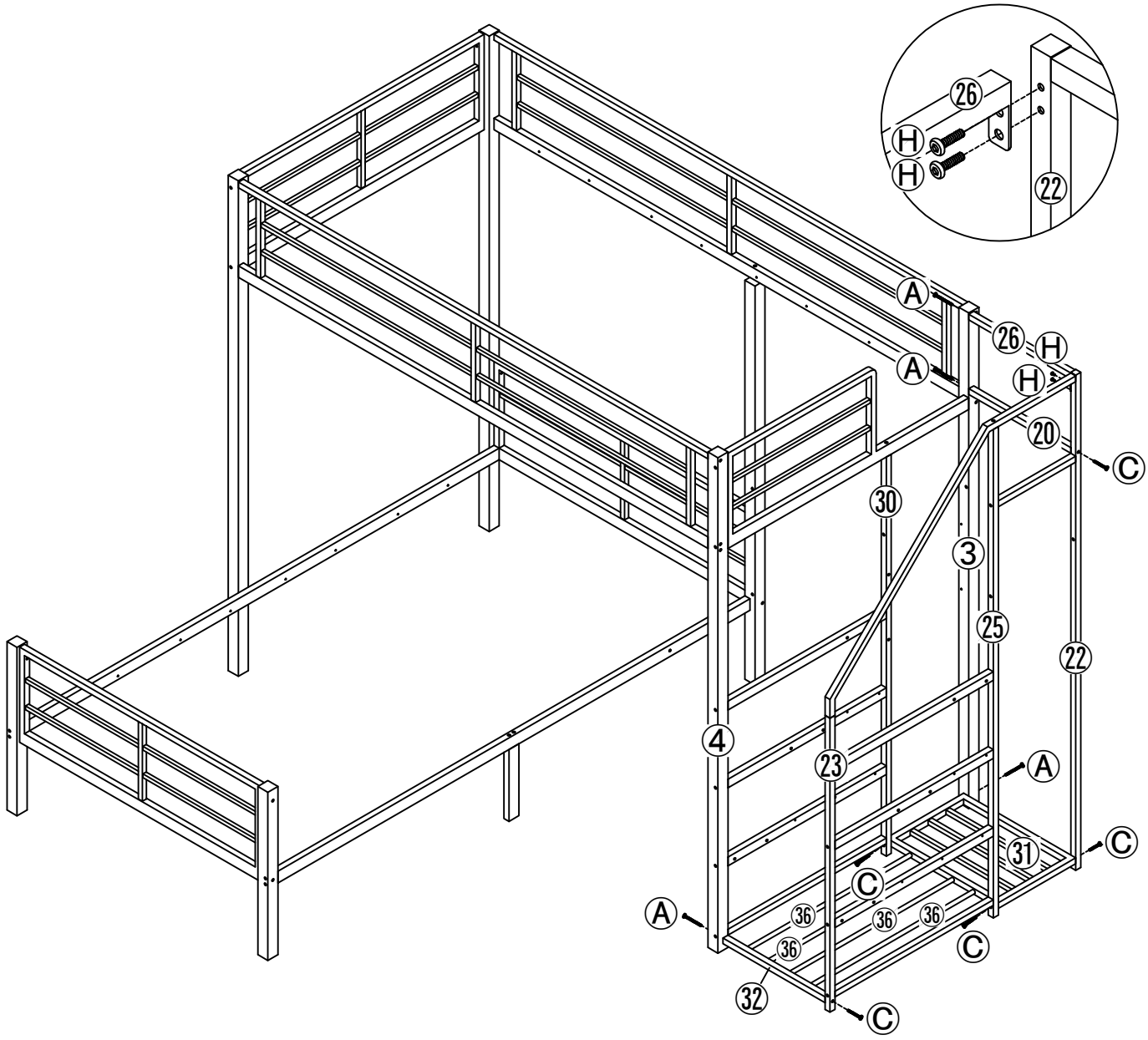

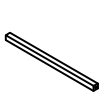		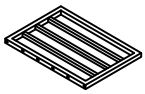		
⑳-1pc	㉖-1pc	㉛-1pc	㉜-1pc	㊱-4pcs
		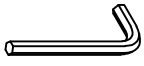		
M8*60mm	M8*35mm	M5mm	M6*12mm	M4mm
Ⓐ-4pcs	Ⓒ-5pcs	Ⓔ-1pc	Ⓗ-2pcs	Ⓝ-1pc

Step 9: Attach Parts #33, #34, #35, #37 to bed frame using Bolts B, C, D, F, H and S with Allen Keys E and N.

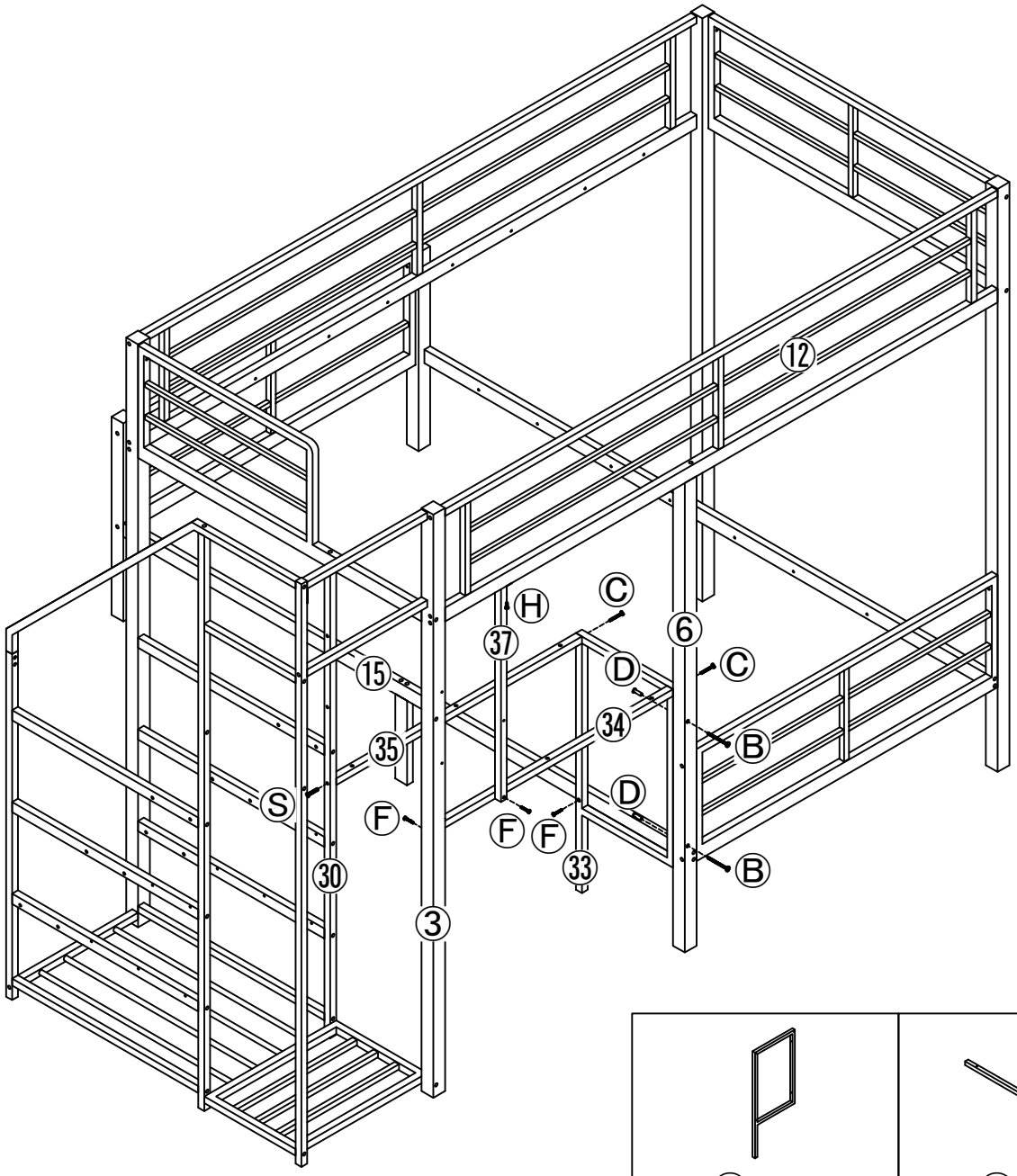

			㉝-1pc	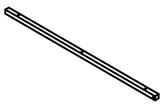 ㉞-1pc
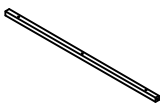 ㉟-1pc	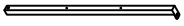 ㊲-1pc	 M8*55mm Ⓑ-2pcs	 M8*35mm Ⓒ-2pcs	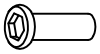 M8*15mm Ⓓ-2pcs
 M5mm Ⓔ-2pcs	 M6*35mm Ⓕ-3pcs	 M6*12mm Ⓗ-1pc	 M4mm Ⓝ-1pc	 M8*35mm Ⓢ-1pc

Step 10: Attach Part #38 to the bed frame using Bolts G with Allen Key N.

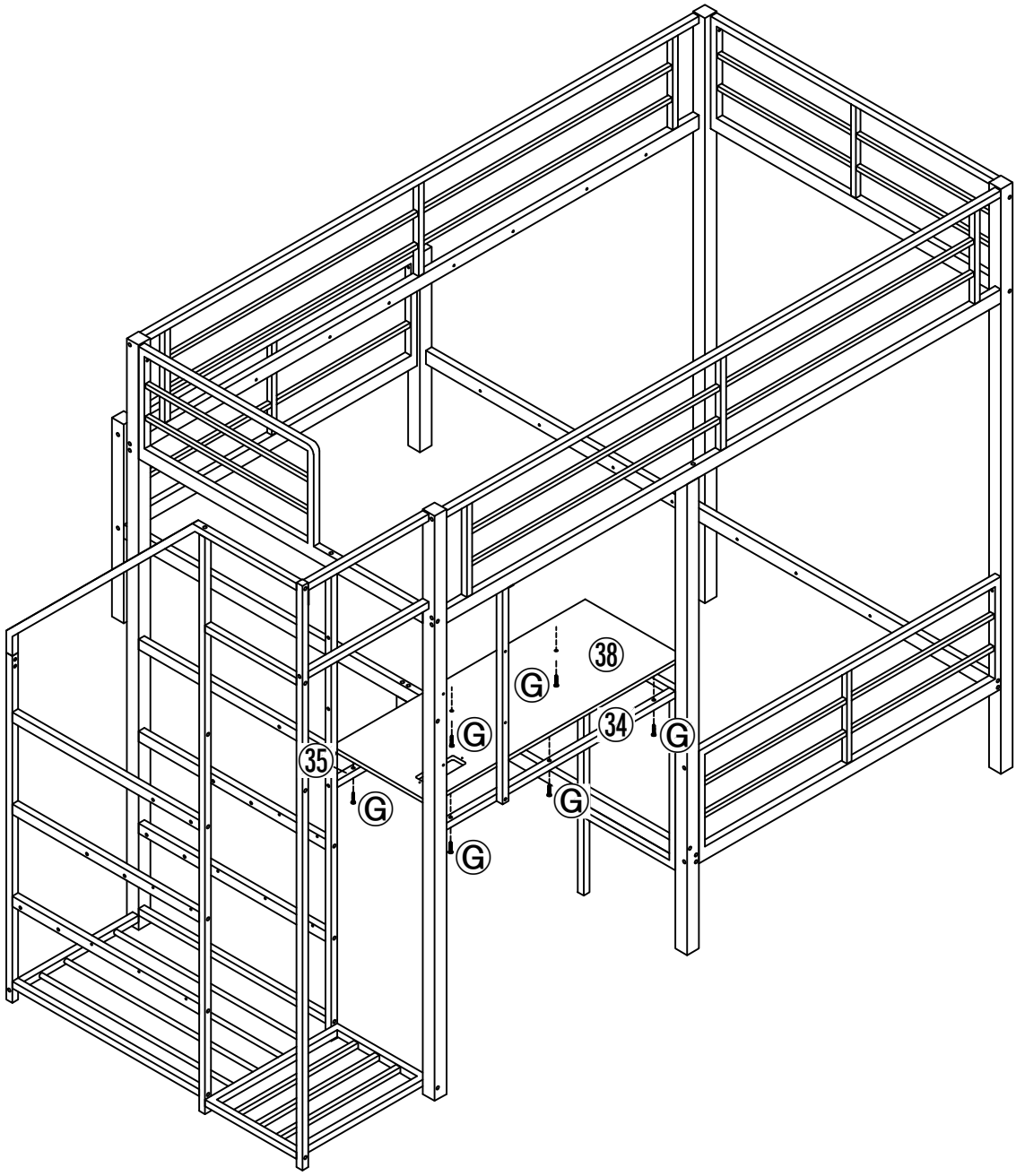

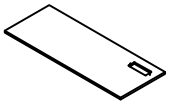		
㊳-1pc	M6*28mm Ⓖ-6pcs	M4mm Ⓝ-1pc

Step 11: Attach the power outlet module K to Part #38 using Screws P as shown. Make sure the cord is routed along the metal frame and secured away from the stair path, walking areas, mattress area, and any place where it may be stepped on or pinched. Do not leave the cord hanging loose.

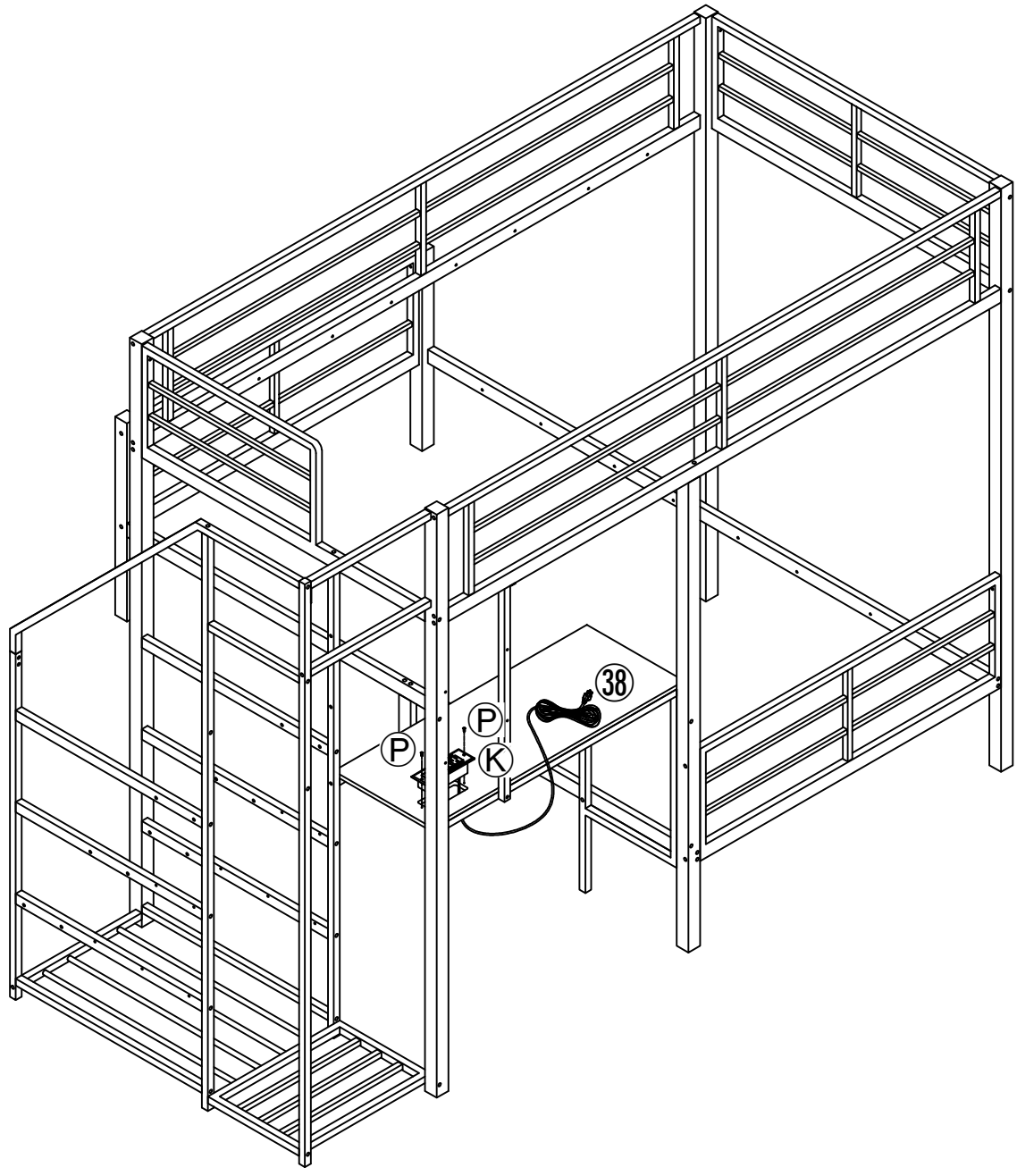

	
Ⓚ-1pc	M3.5*12mm Ⓟ-2pcs

Step 12: Attach the two Parts #39 to the bed frame using Bolts M with Allen Key Q.

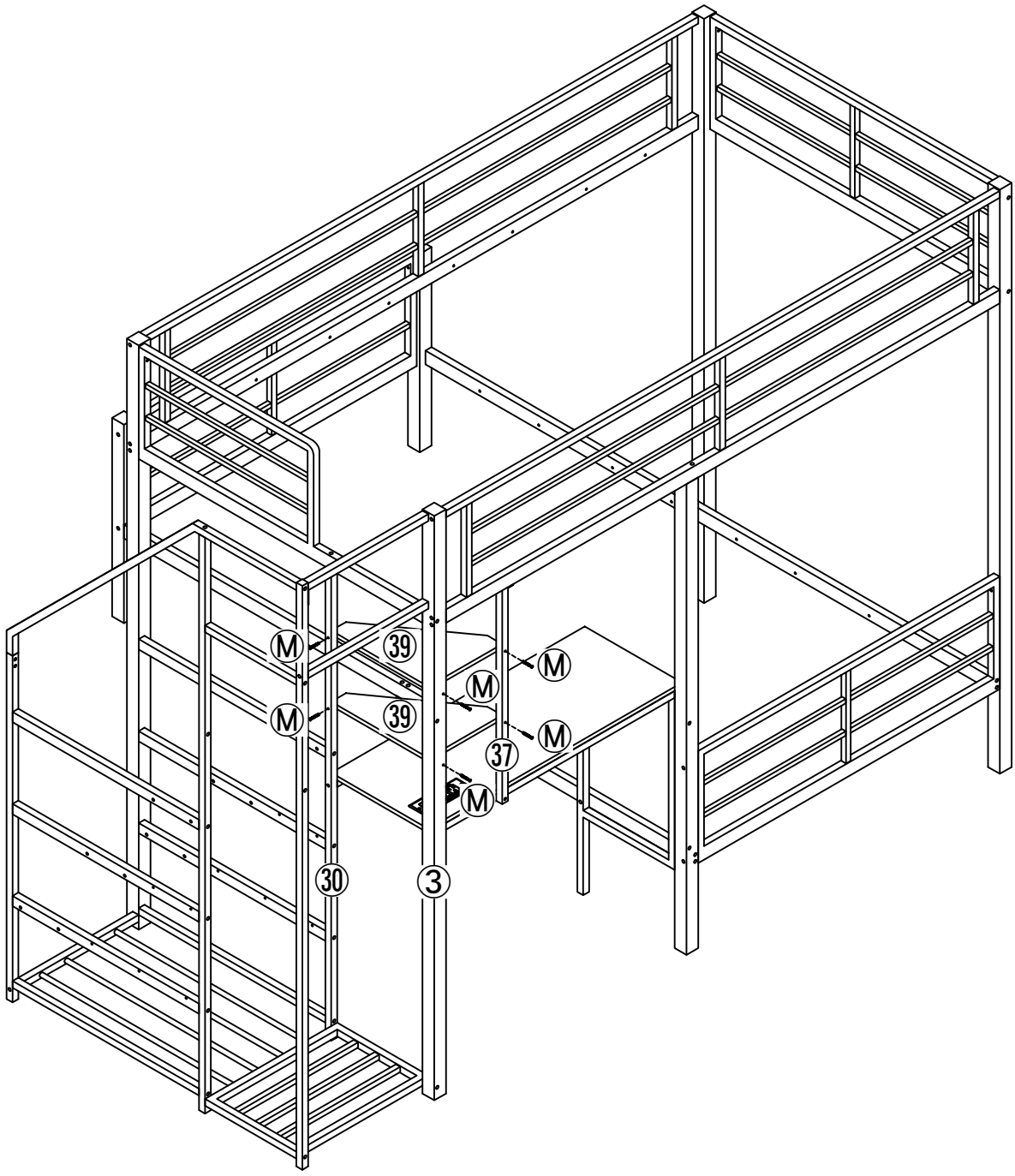

		
㊴-2pcs	M5*60mm Ⓜ-6pcs	M3mm Ⓠ-1pc

Step 13: Attach Parts #21, #40, #42, #43 and #44 together using Bolts I and M with Allen Keys N and Q.

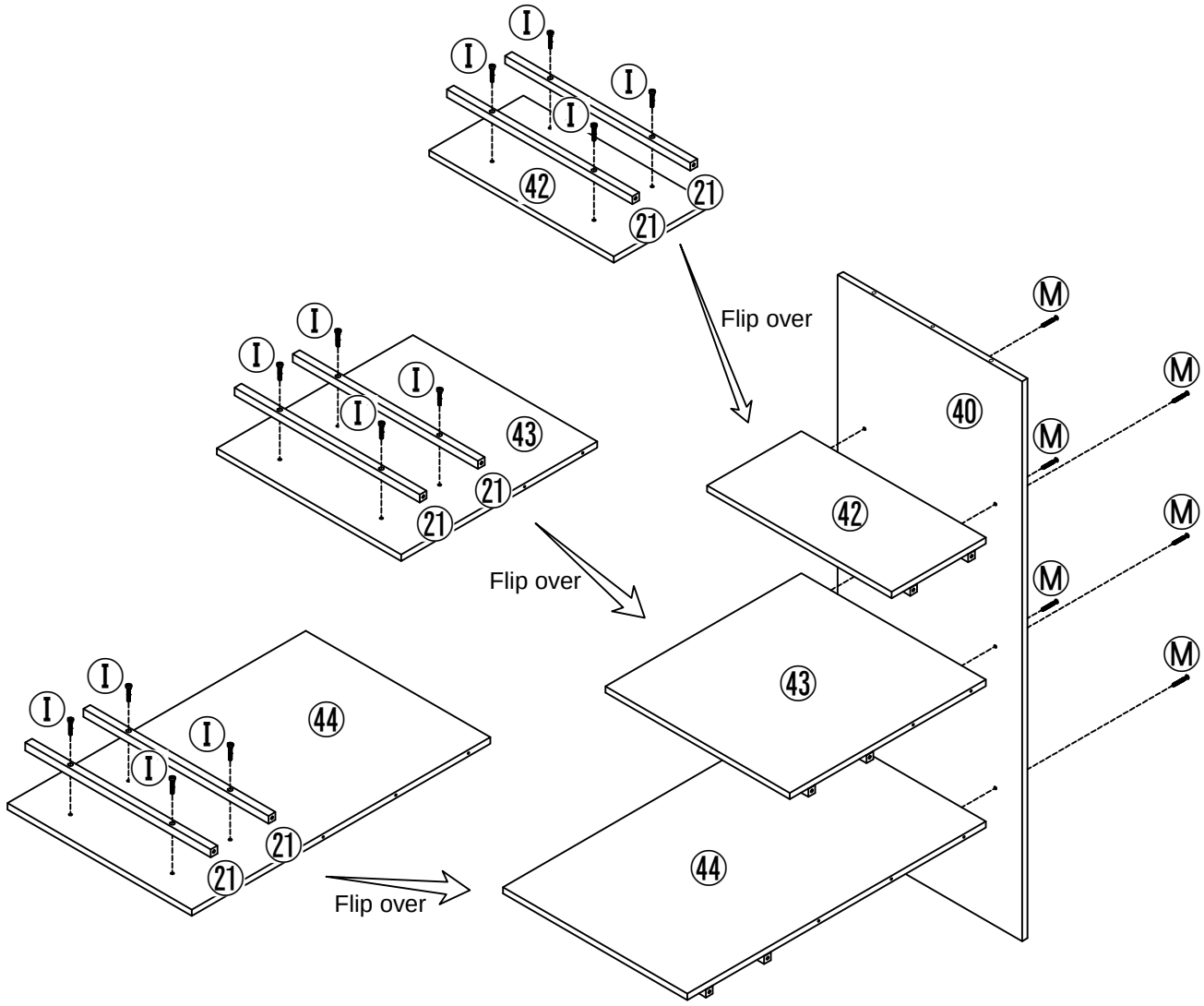

 ㉑-6pcs	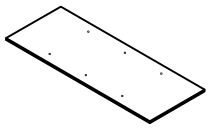 ㊵-1pc	 ㊷-1pc	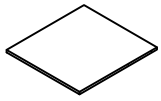 ㊸-1pc	
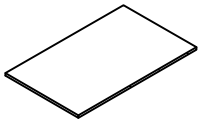 ㊹-1pc	 M6*25mm Ⓘ-12pcs	 M5*60mm Ⓜ-6pcs	 M4mm Ⓝ-1pc	 M3mm Ⓠ-1pc

Step 14: Attach Parts #40, #42, #43, and #44 to the bed frame using Bolts F and M with Allen Keys N and Q.

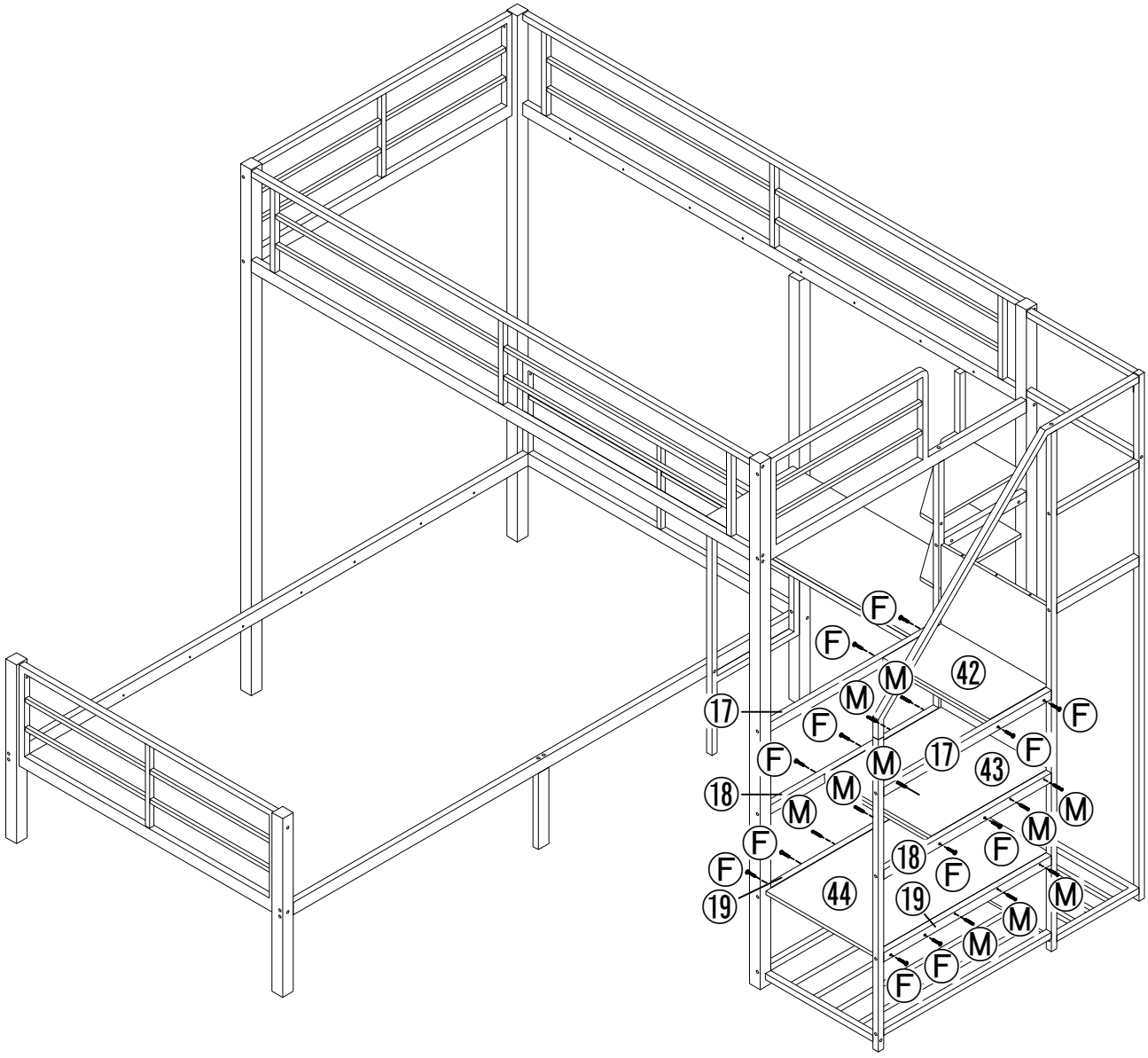

M6*35mm	M5*60mm	M4mm	M3mm
Ⓕ-12pcs	Ⓜ-10pcs	Ⓝ-1pc	Ⓠ-1pc

Step 15: Attach Parts #29, #41, and #45 together using Fasteners H, I, and X with Allen Key N.

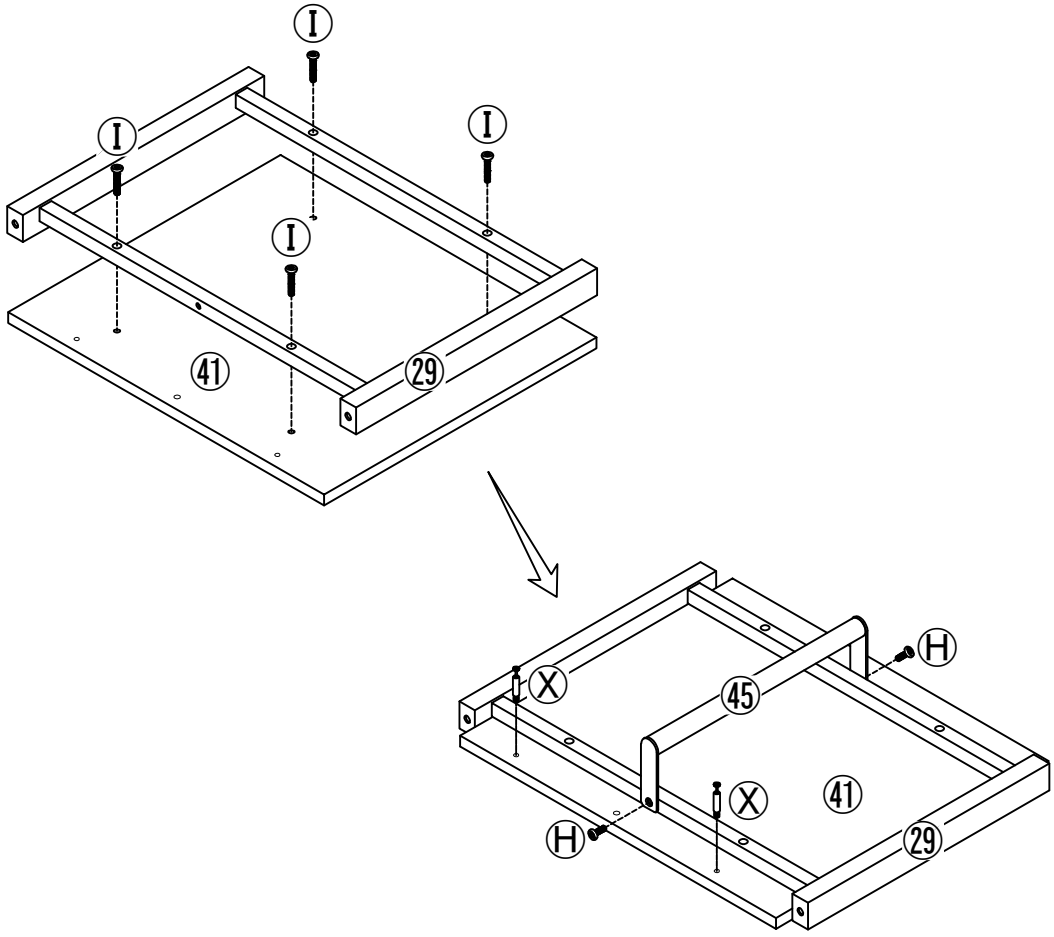

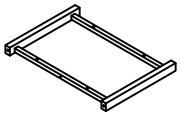 ㉙-1pc	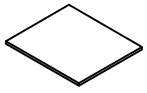 ㊶-1pc			
 ㊺-1pc	 M6*12mm Ⓗ-2pcs	 M6*25mm Ⓘ-4pcs	 M4mm Ⓝ-1pc	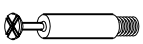 Ⓧ-2pcs

Step 16: *Attach Parts #40 and #41 together using hardware W and Y.*

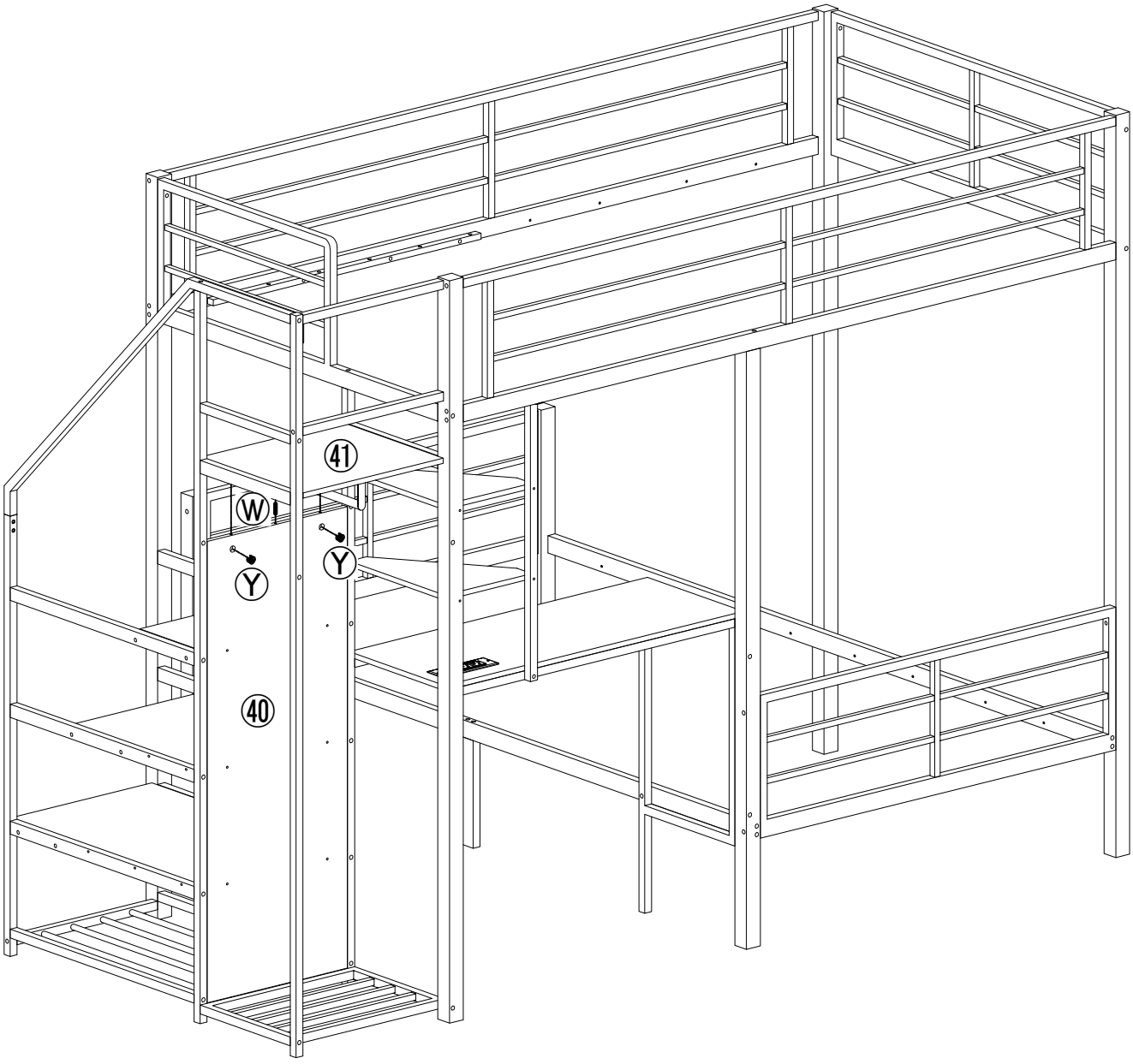

 Ø6*30mm Ⓦ-1pc	 Ⓨ-2pcs

Step 17: Attach Parts #29, #41 to bed frame using Bolts A and C with Allen Key E.

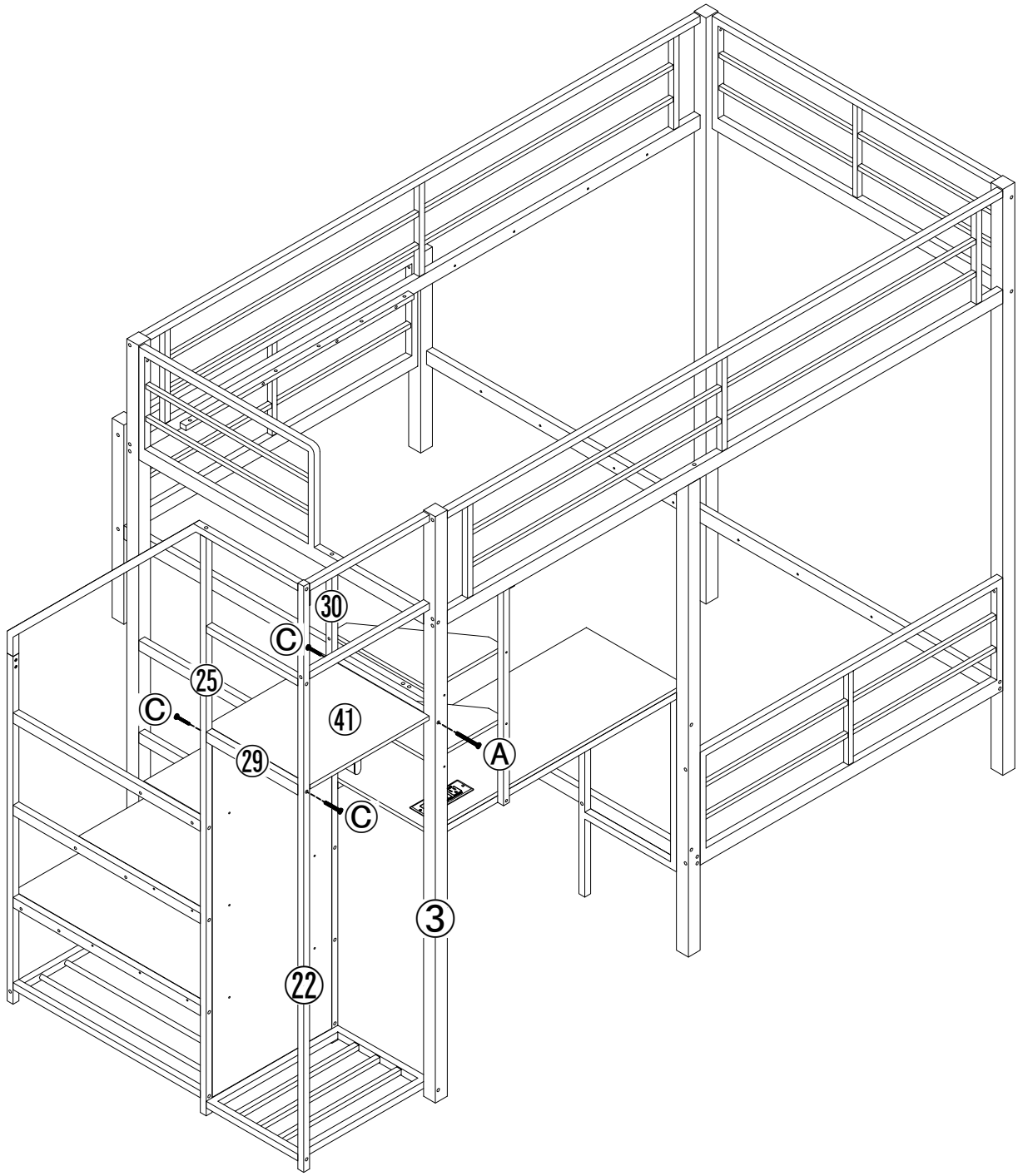

 M8*60mm Ⓐ-1pc	 M8*35mm Ⓒ-3pcs	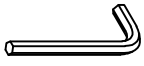 M5mm Ⓔ-1pc

Step 18: Build four identical slat assemblies. Each slat assembly uses two Parts #7 and six Parts #8. Secure them with Bolts I using Allen Key N. After assembly, flip each slat assembly over for installation.

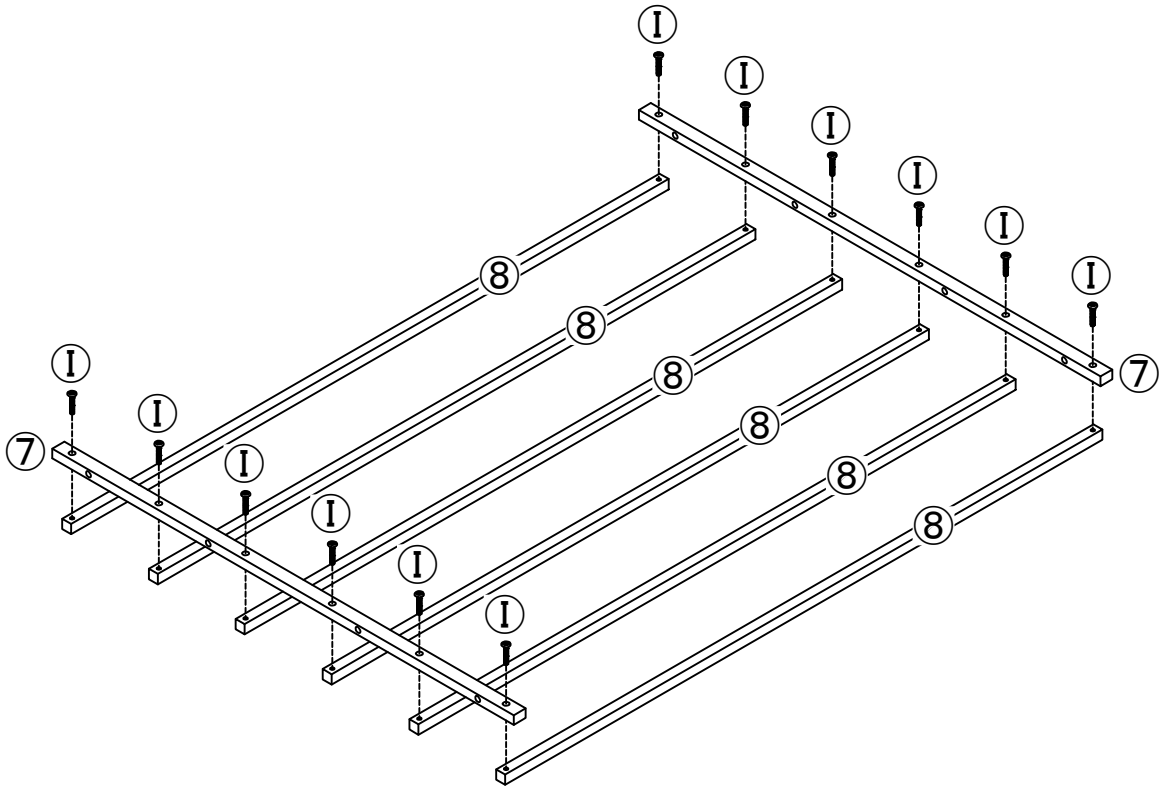

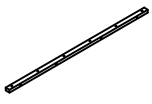			
⑦-8pcs	⑧-24pcs	M6*25mm Ⓘ-48pcs	M4mm Ⓝ-1pc

Step 19: Install two slat assemblies onto the upper bed frame as shown. Secure them with Bolts L using Allen Key N. Do not step on the slats without a mattress in place.

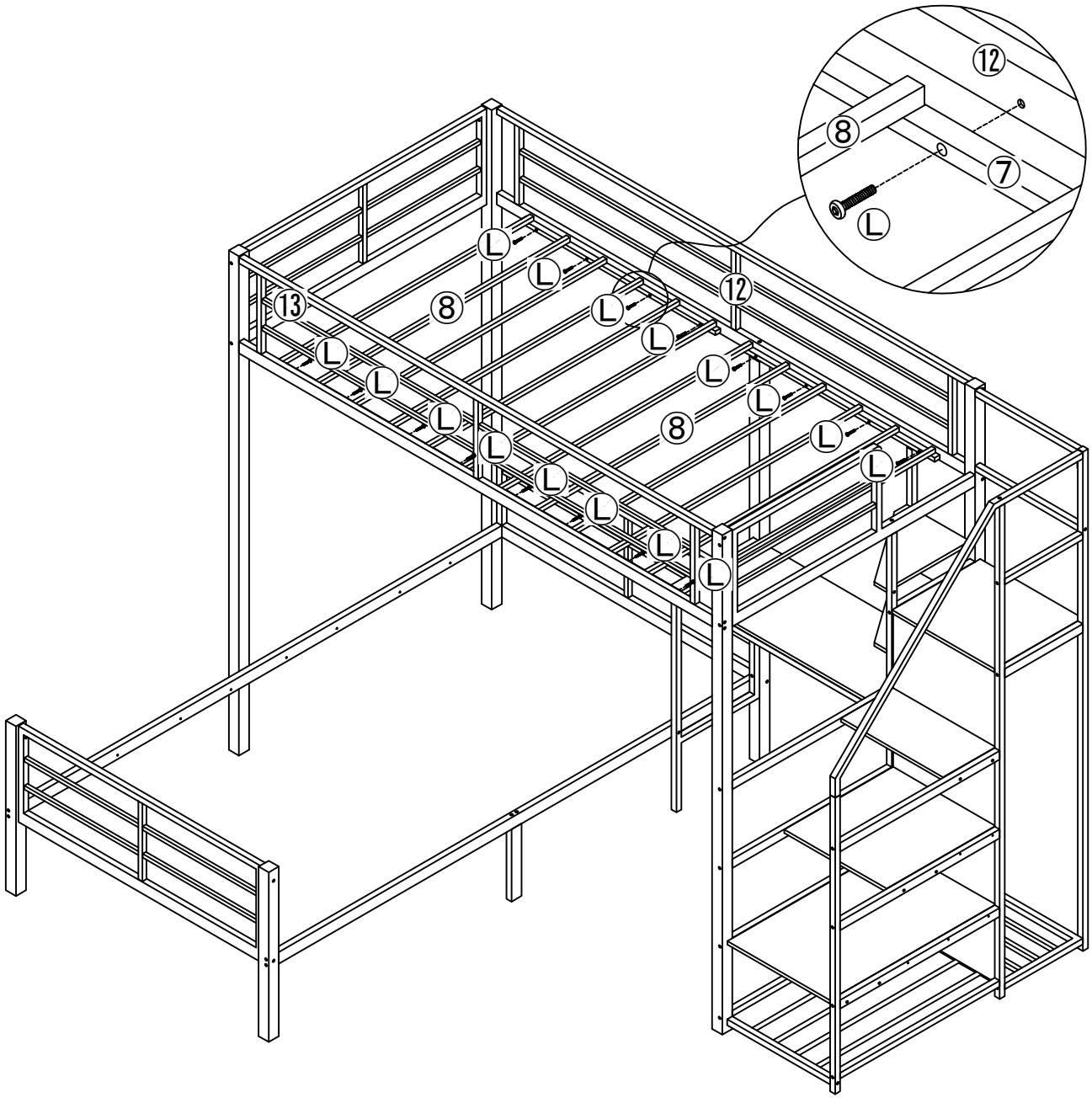

 M6*30mm Ⓛ-16pcs	 M4mm Ⓝ-1pc

Step 20: Install two slat assemblies onto the lower bed frame as shown. Secure them with Bolts L using Allen Key N. Do not step on the slats without a mattress in place.

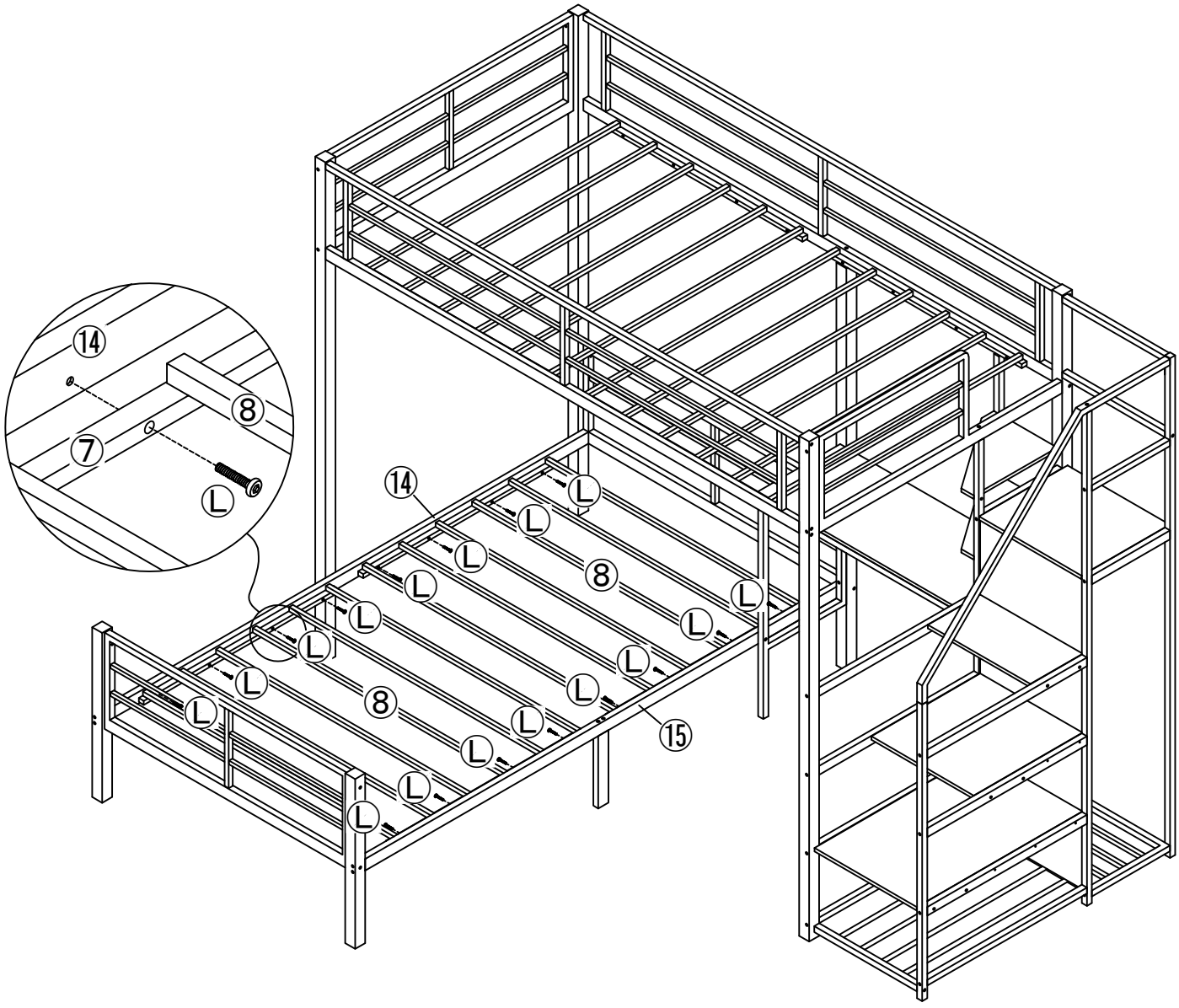

 M6*30mm Ⓛ-16pcs	 M4mm Ⓝ-1pc

Step 21: Attach Light Strip V to the bottom tube on the back of Part #12. Clean and dry the surface before attaching. Route the cord along the frame and keep it away from the stair path, walking areas, mattress area, and any place where it may be stepped on or pinched. Do not power on the light strip until installation is complete.

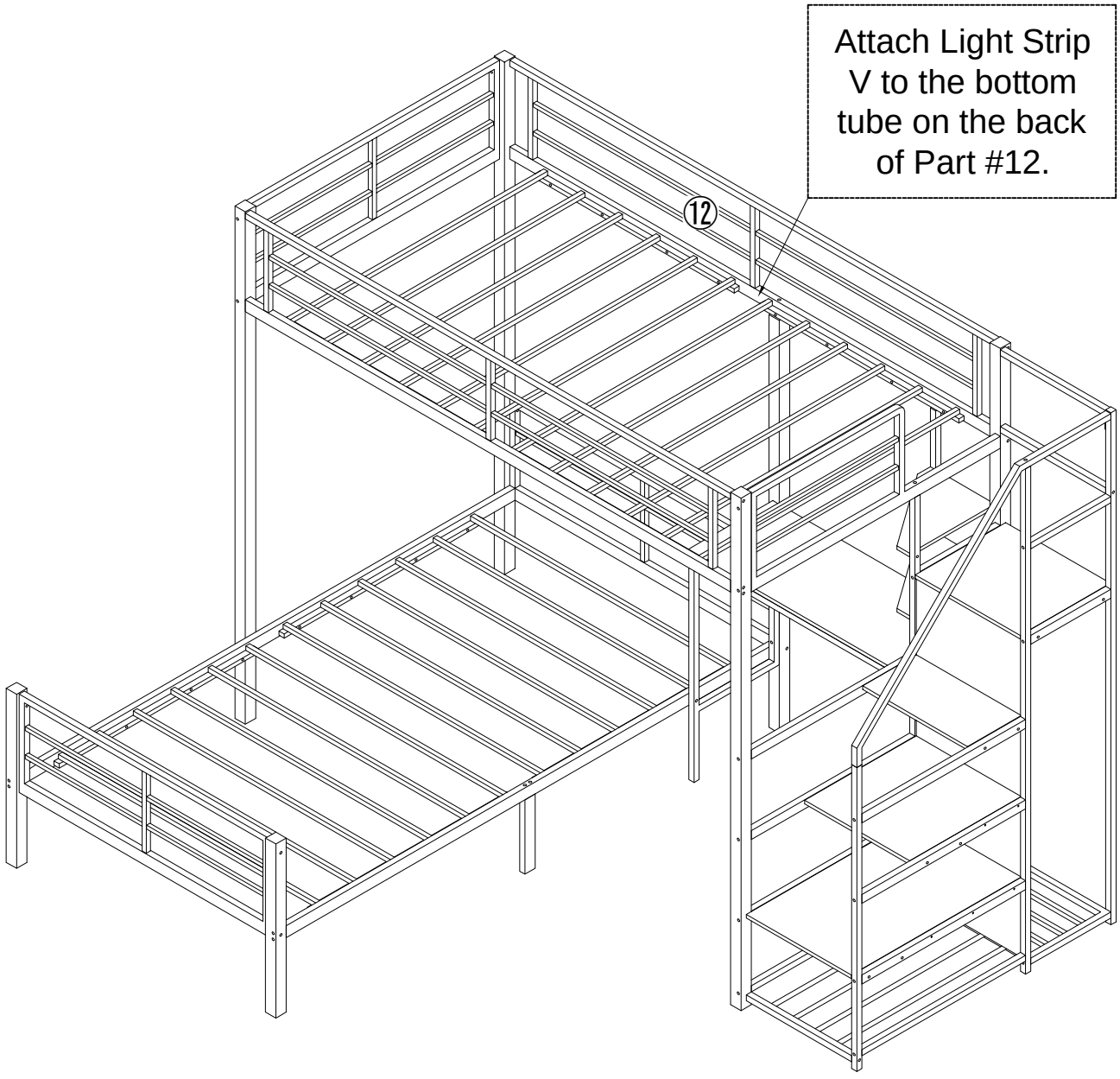



Light Strip

Ⓥ-1pc

Step 22: Secure the bed to the wall using anti-tip hardware T and U before use. For best results, attach the anti-tip brackets to wall studs when possible. If mounting to drywall, masonry, or another wall type, use anchors suitable for that wall material.

Final Check

Make sure all bolts and screws are fully tightened.

Make sure the stair unit is securely attached.

Make sure the bed is secured to the wall with anti-tip hardware.

Make sure all electrical cords are routed away from the stair path and walking areas.

Confirm all slat assemblies are evenly positioned and fully secured.

Place the correct mattress on the frame before use.

Do not step on the slats without a mattress in place.

Make sure the bed is level and stable before use.

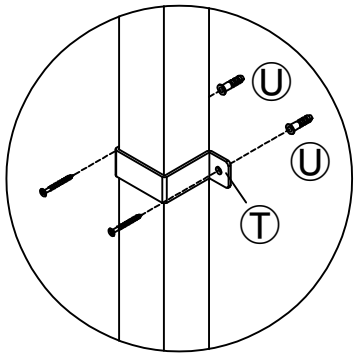

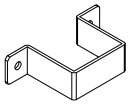	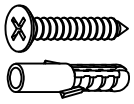
Ⓣ-2pcs	Ⓤ-4sets