Velvet Upholstered Bed with Gold Trim

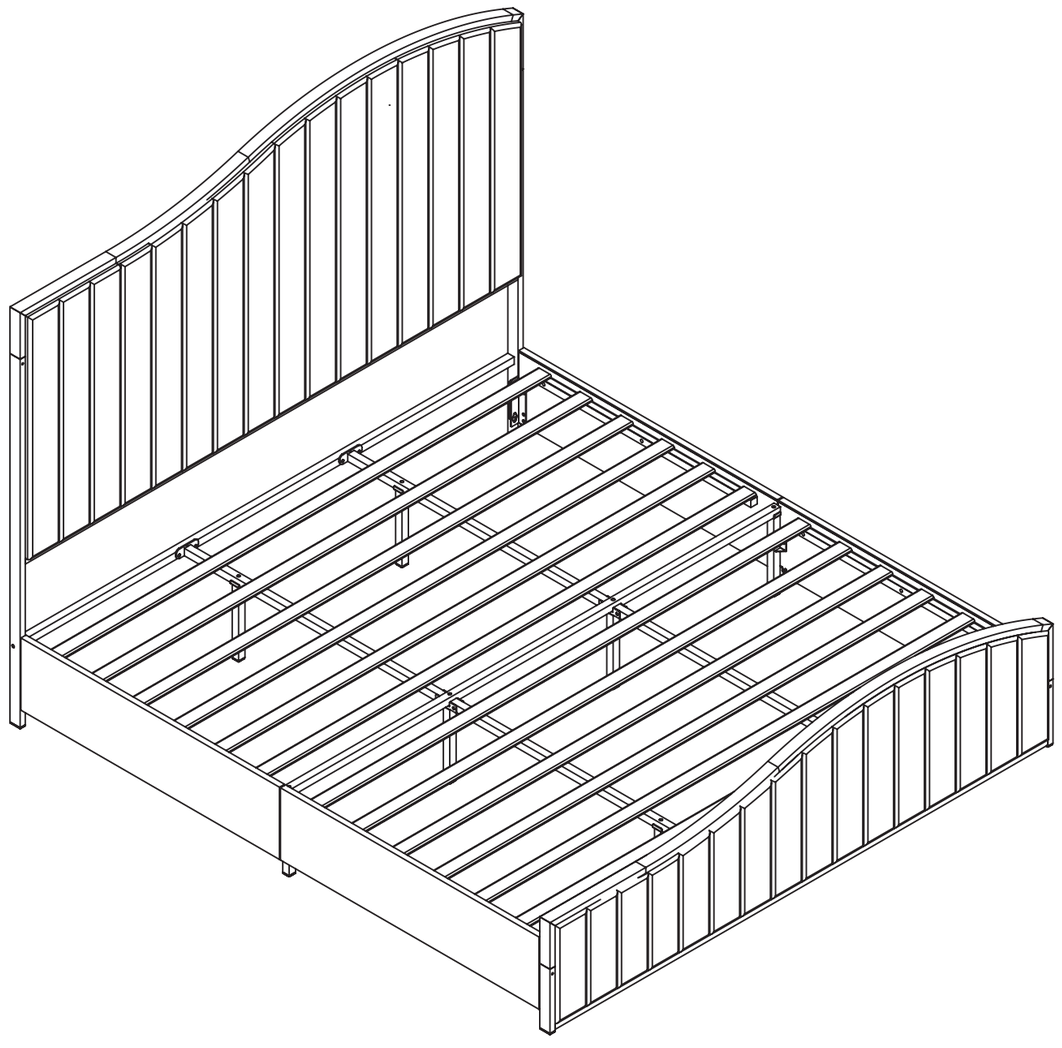

Friendly Customer Service

Satisfaction Guarantees: Any problems with assembly, quality, or return, please feel free to contact us directly.

ASSEMBLY INSTRUCTIONS

! IMPORTANT

Please follow the instruction manuals and use a pad to protect the product during your assembly.

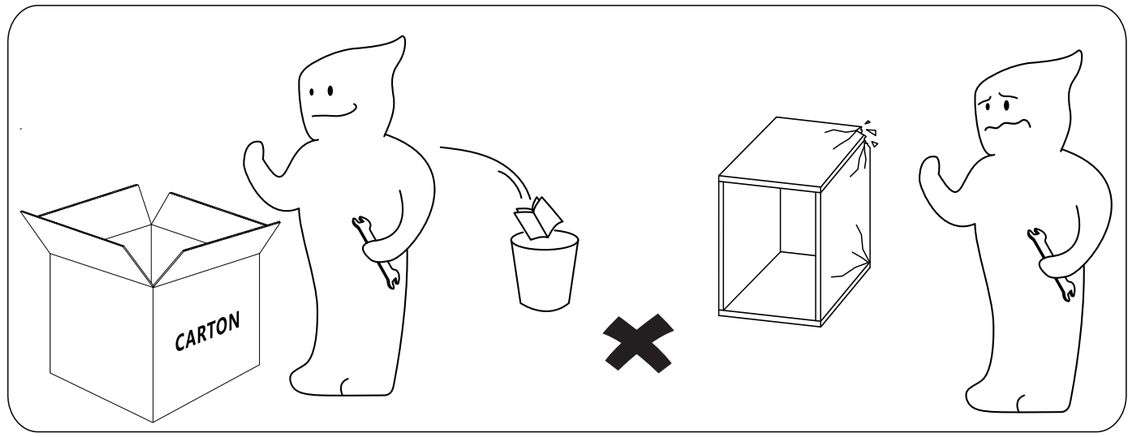

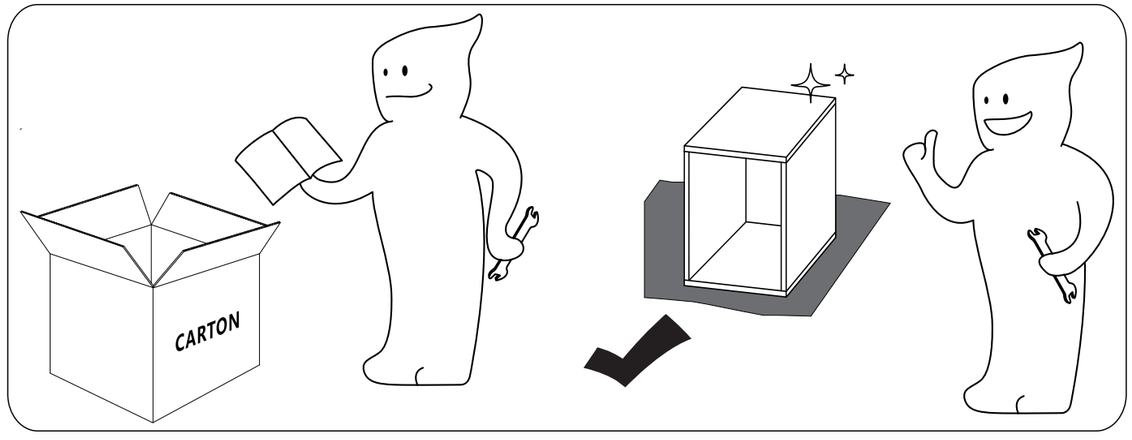

Note:
1. Should be assembled on flat ground to keep balance.
2. Before completing the installation, do not tighten the screws.

For easier and better assembly, **2** or more adults are required.

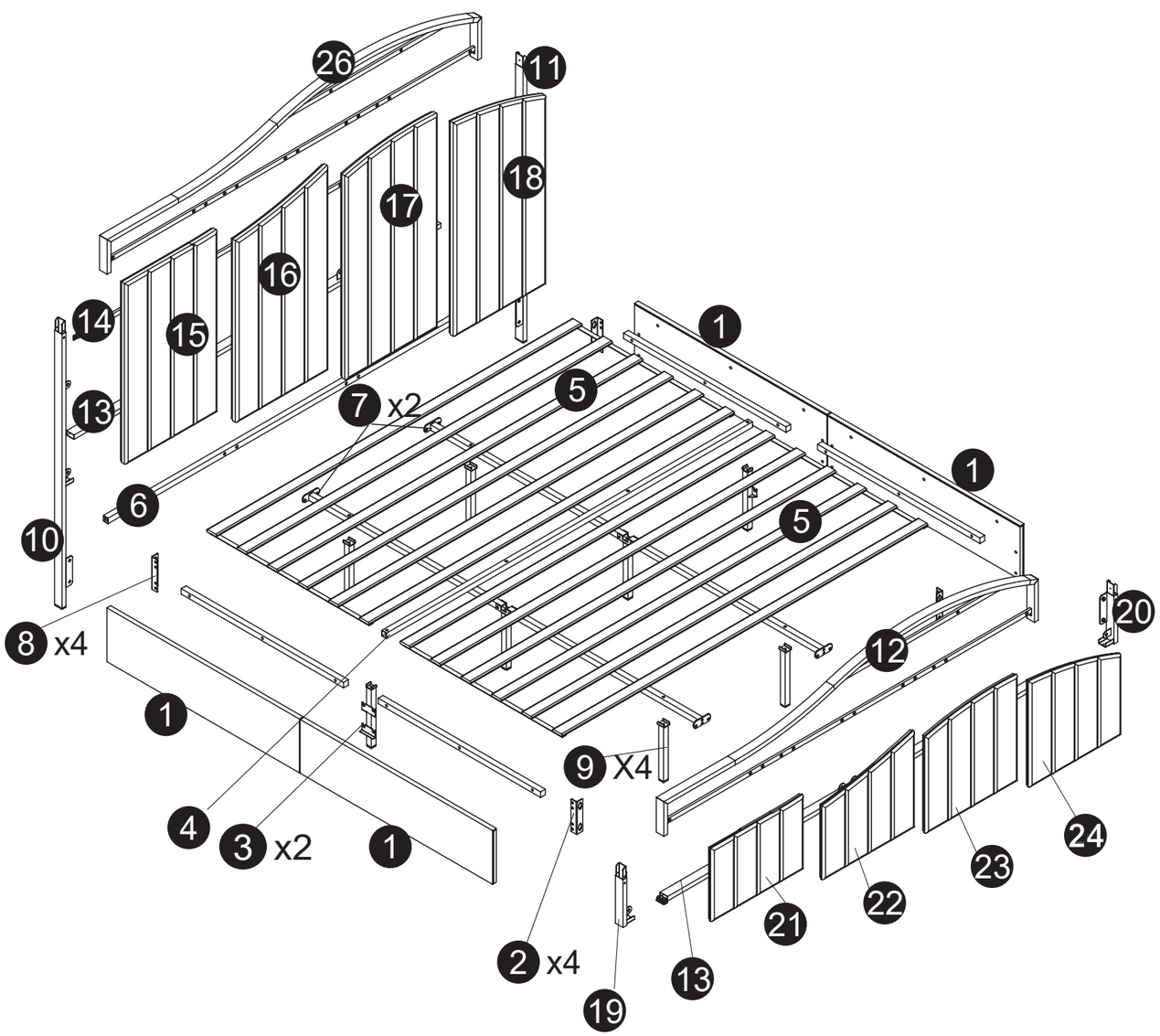

PARTS LIST

1 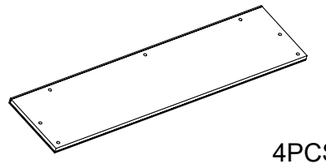 4PCS	2 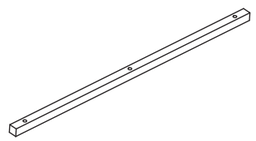 4PCS	3 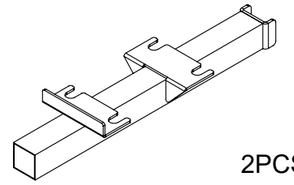 2PCS
4 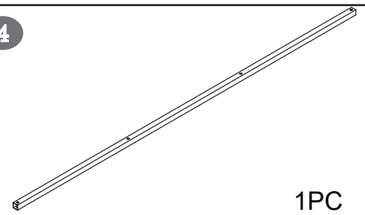 1PC	5 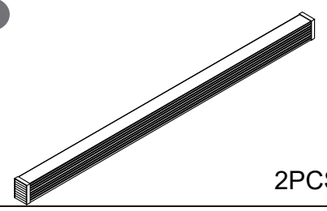 2PCS	6 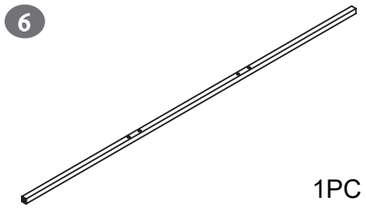 1PC
7 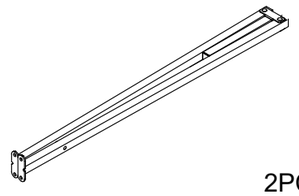 2PC	8 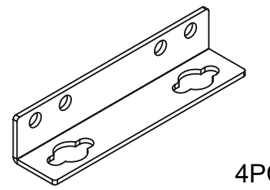 4PCS	9 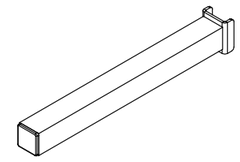 4PCS
10 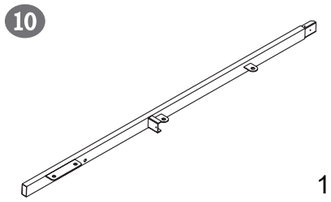 1PC	11 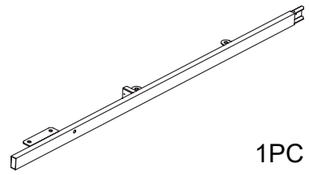 1PC	12 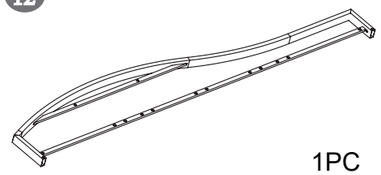 1PC
13 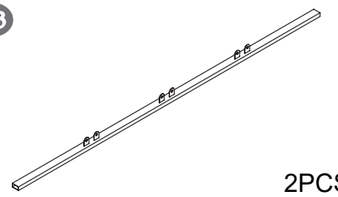 2PCS	14 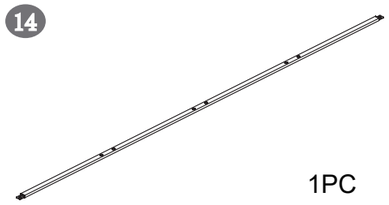 1PC	15 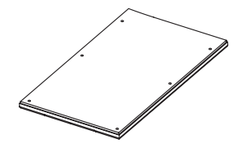 1PC
16 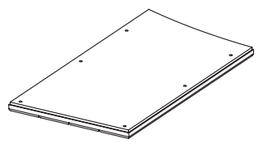 1PC	17 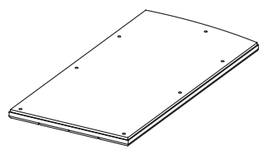 1PC	18 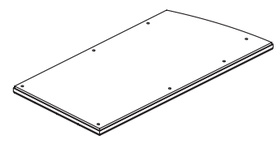 1PC
19 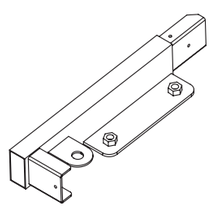 1PC	20 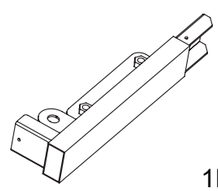 1PC	21 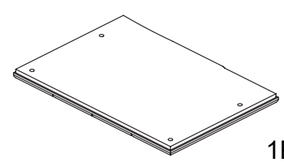 1PC

22 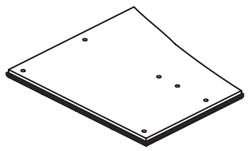 1PC	23 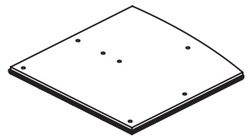 1PC	24 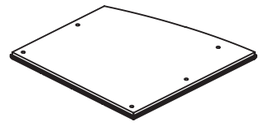 1PC
25 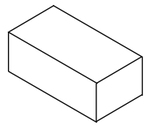 4PCS	26 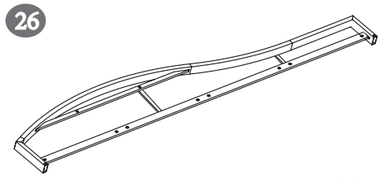 1PC	A  M8*14 28PCS
B  M8*20 46PCS	C  M8*30 8PCS	D  Black Zinc M8*25 4PCS
E 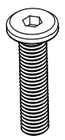 M8*38 20PCS	F  Black Zinc M8*50 2PCS	G  1PC

1

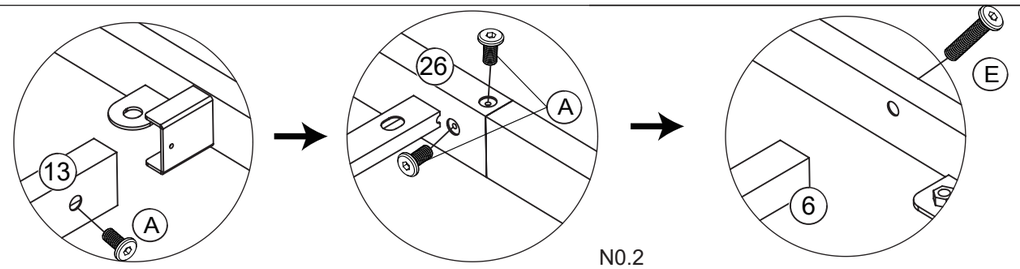

Screw all the parts sequentially,
do not fully tighten all the screws
until you complete all the installation.

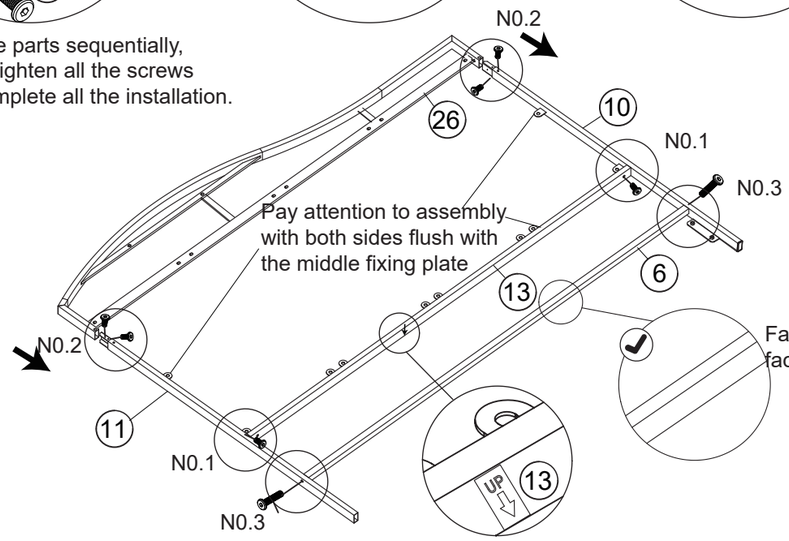

A		6PCS
E		2PCS

2

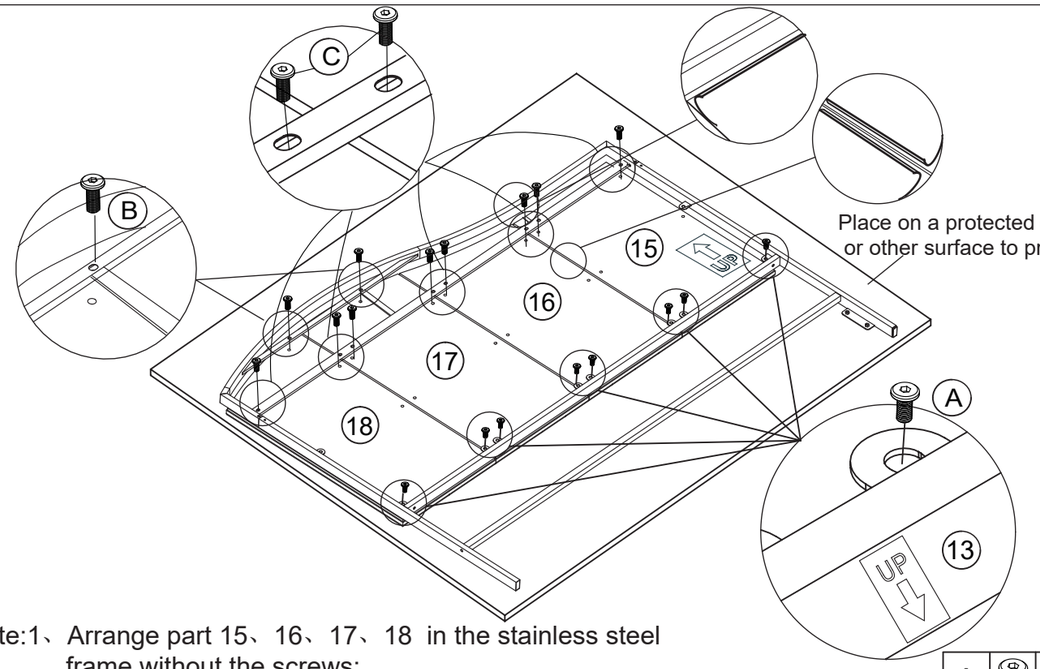

Note:1、Arrange part 15、16、17、18 in the stainless steel frame without the screws;
2、Keep the non-woven frills on the back of the headboard tidy,don't clipped in the crevices of each part
3、Screw all the parts sequentially,do not fully tighten all the screws until you complete all the installation.

A		8PCS
B		2PCS
C		8PCS

3

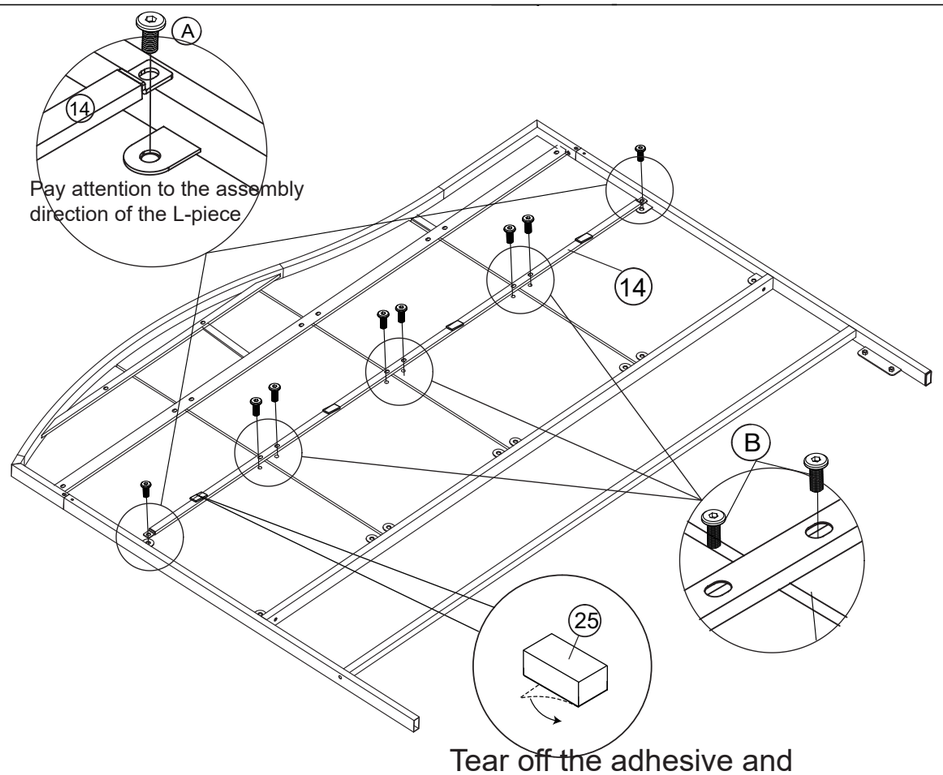

A		2PCS
B		6PCS

4

X2

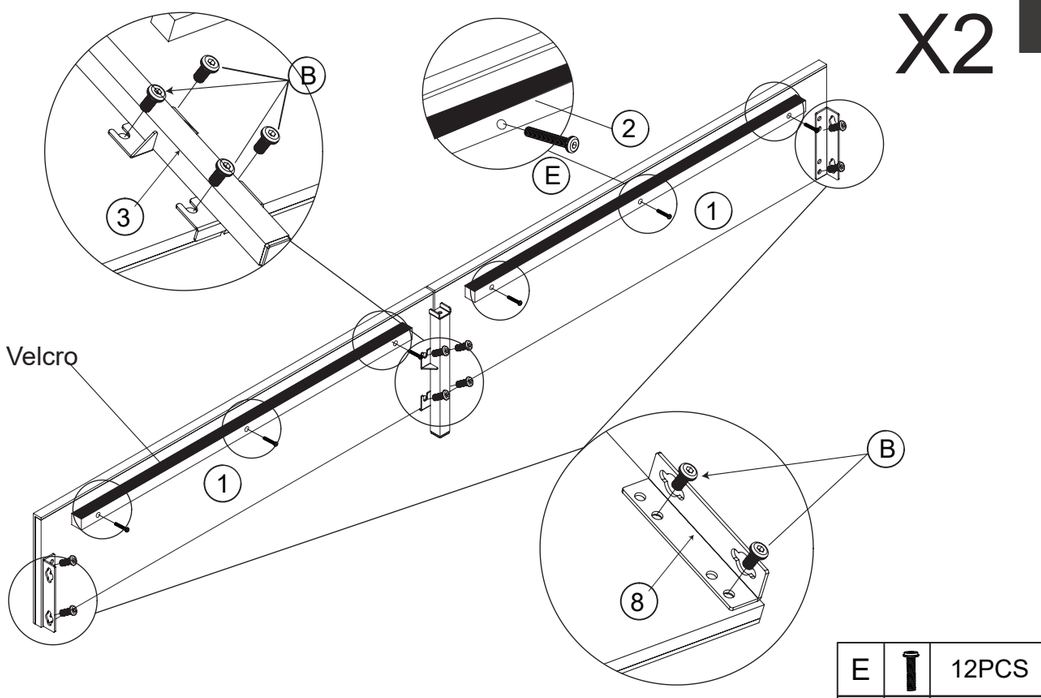

E		12PCS
B		16PCS

5

Note:1： First assemble components 19,20,13, and finally assemble component 12

2、Screw all the parts sequentially,do not fully tighten all the screws until you complete all the installation.

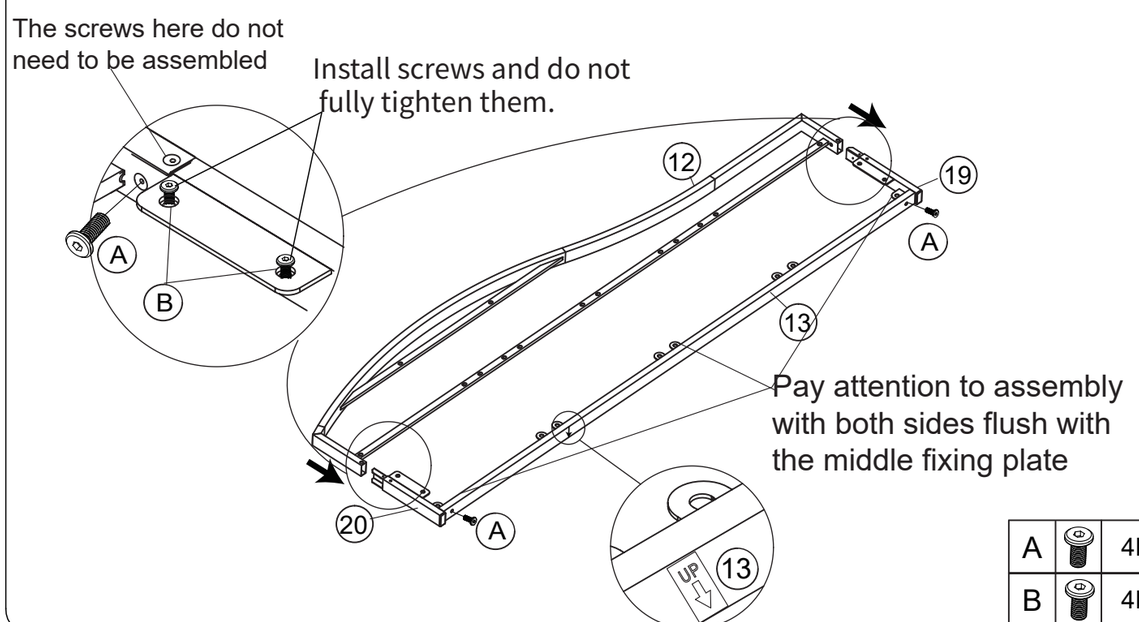

A		4PCS
B		4PCS

6

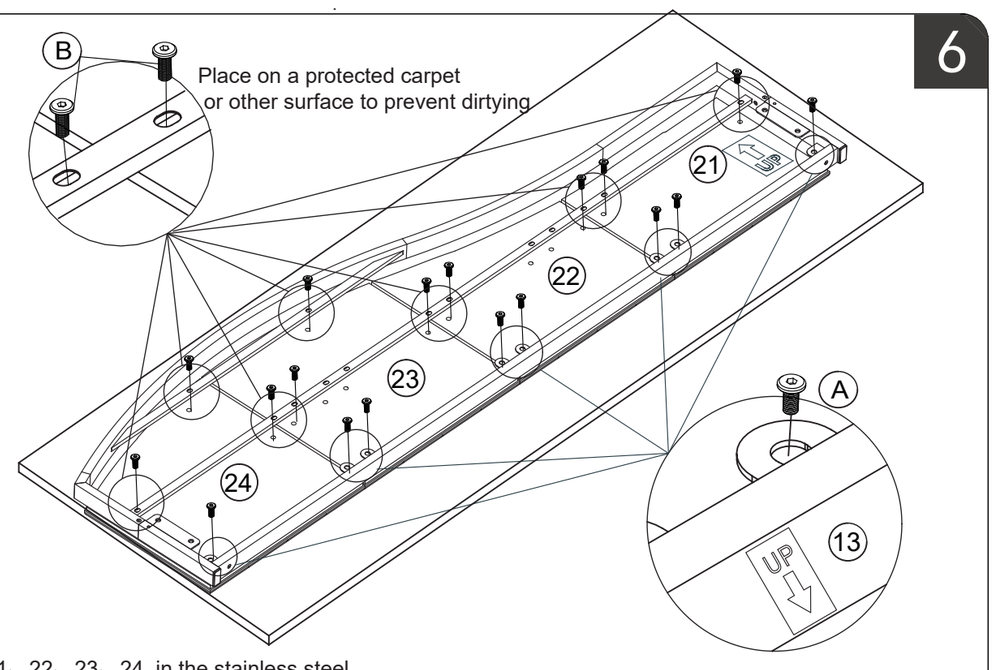

Note:1、Arrange part 21、22、23、24 in the stainless steel frame without the screws;

2、Keep the non-woven frills on the back of the headboard tidy,don't clipped in the crevices of each part

3、Screw all the parts sequentially,do not fully tighten all the screws until you complete all the installation.

A		8PCS
B		10PCS

7

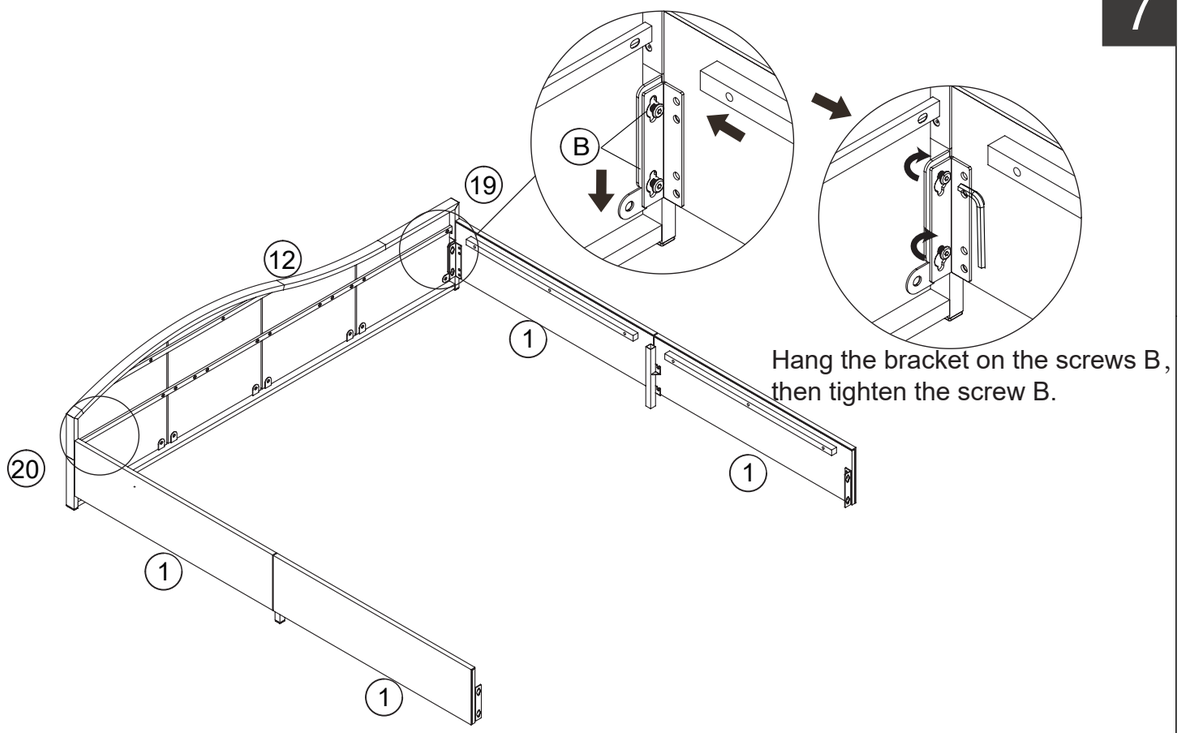

Hang the bracket on the screws B, then tighten the screw B.

8

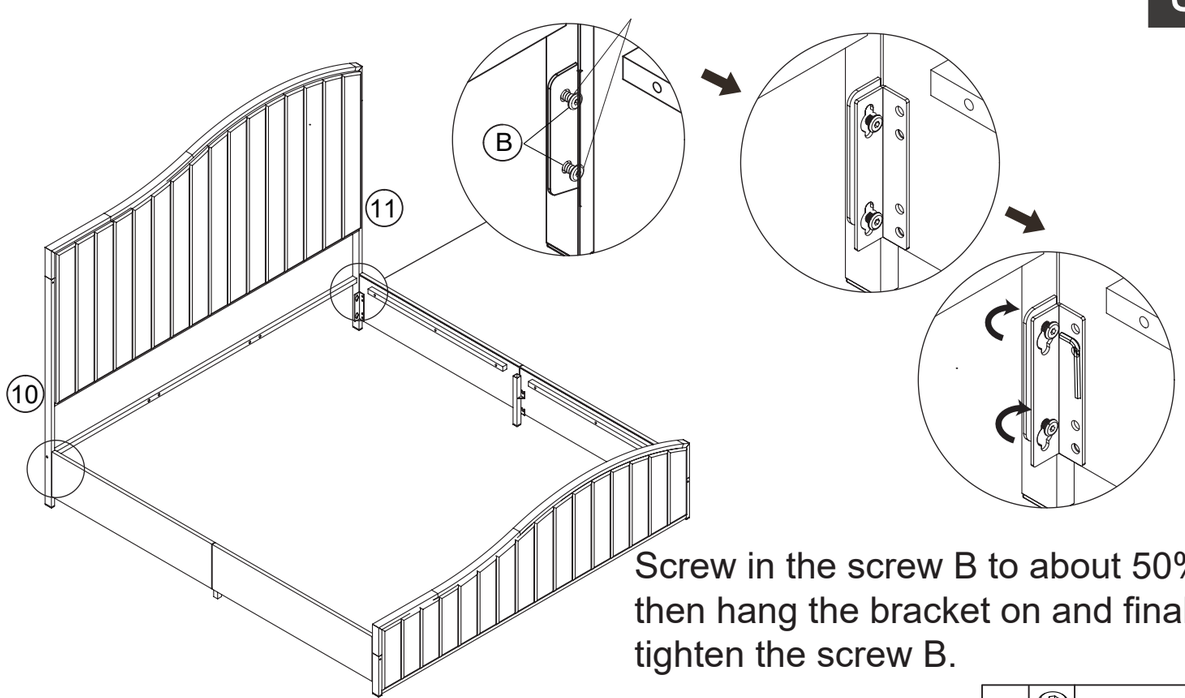

Screw in the screw B to about 50%, then hang the bracket on and finally tighten the screw B.

B		4PCS

9

WARNING!
Moving parts can crush or cut.
Keep fingers,hands,and feet away to avoid injury.

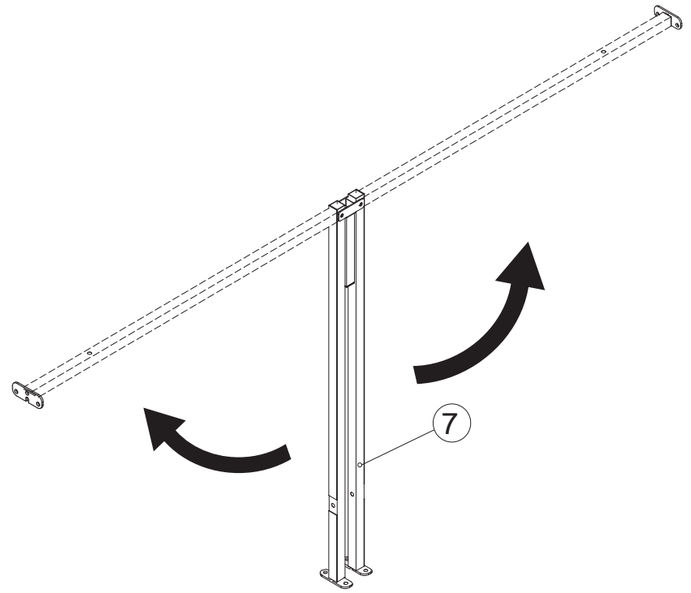

X2

10

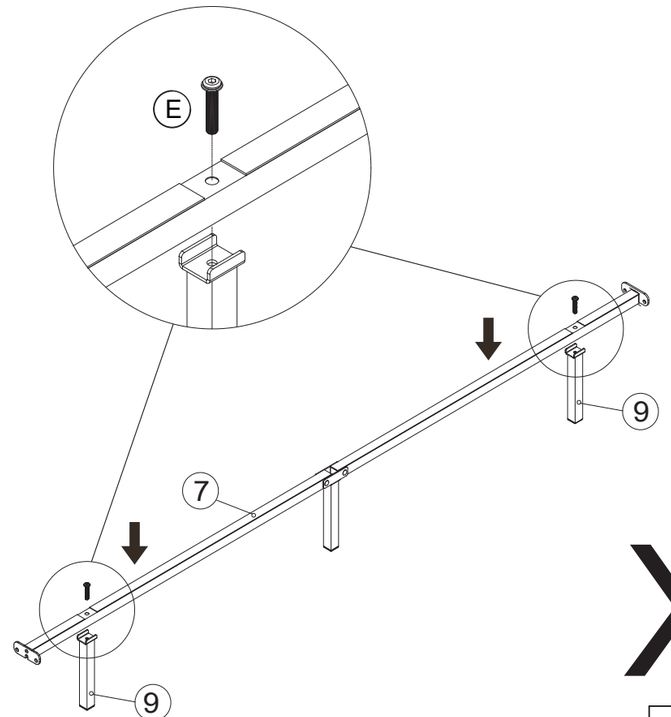

X2

E		4PCS

11

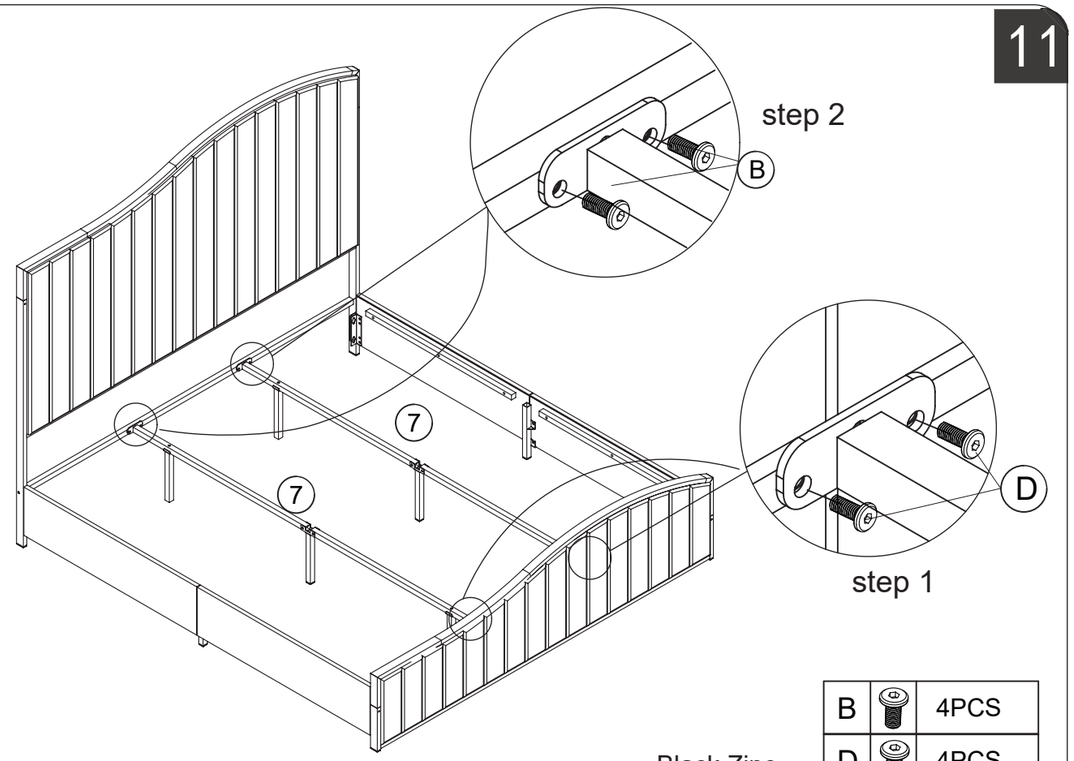

B		4PCS
D		4PCS

Black Zinc

12

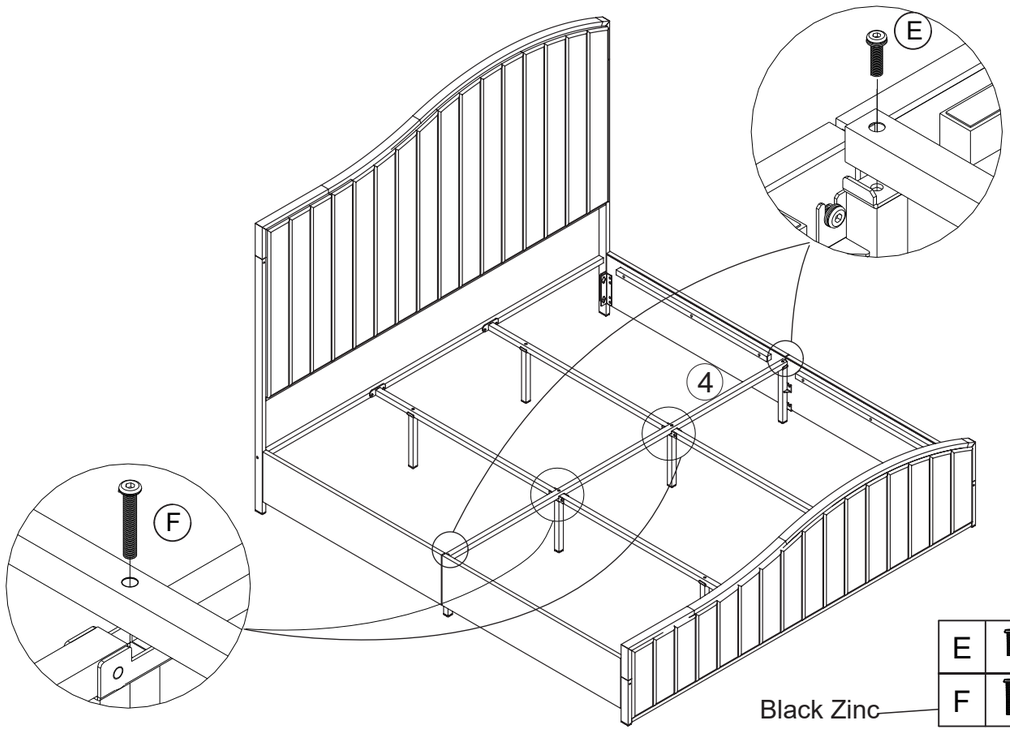

E		2PCS
F		2PCS

Black Zinc

13



step 1

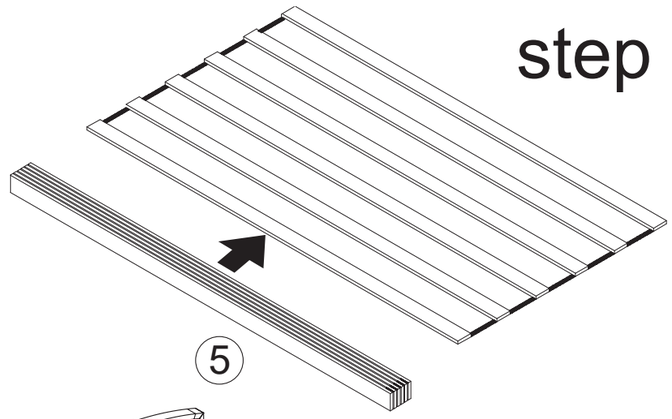

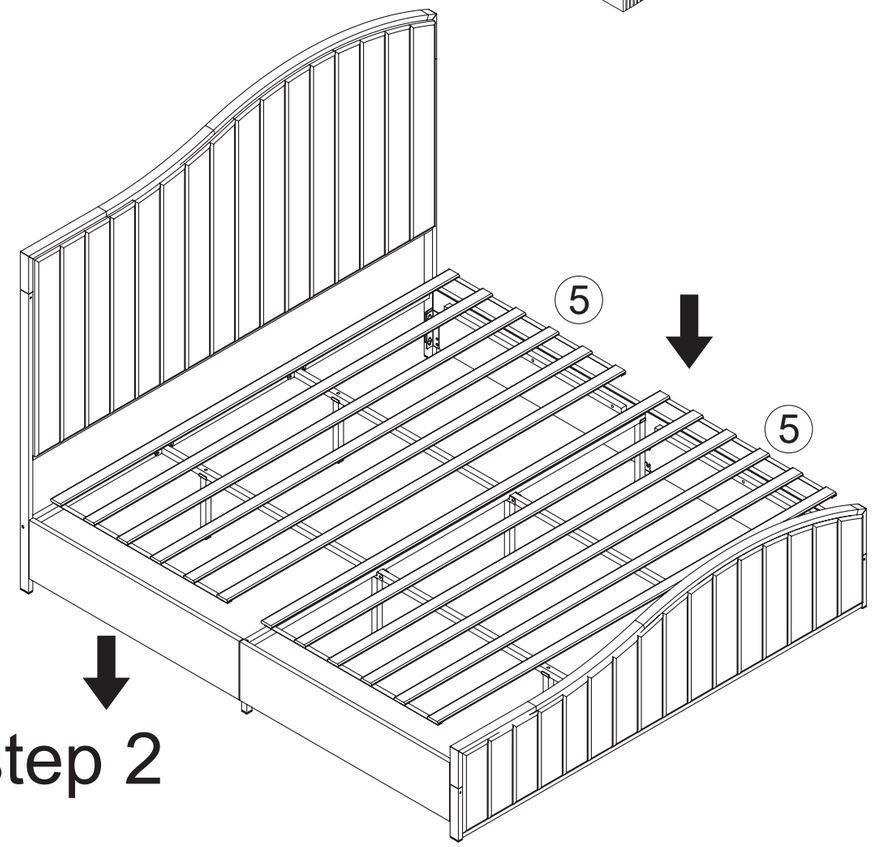

step 2

Installation Complete