Furniture Dog Cage

AssemblyInstructions -Please keep for future reference

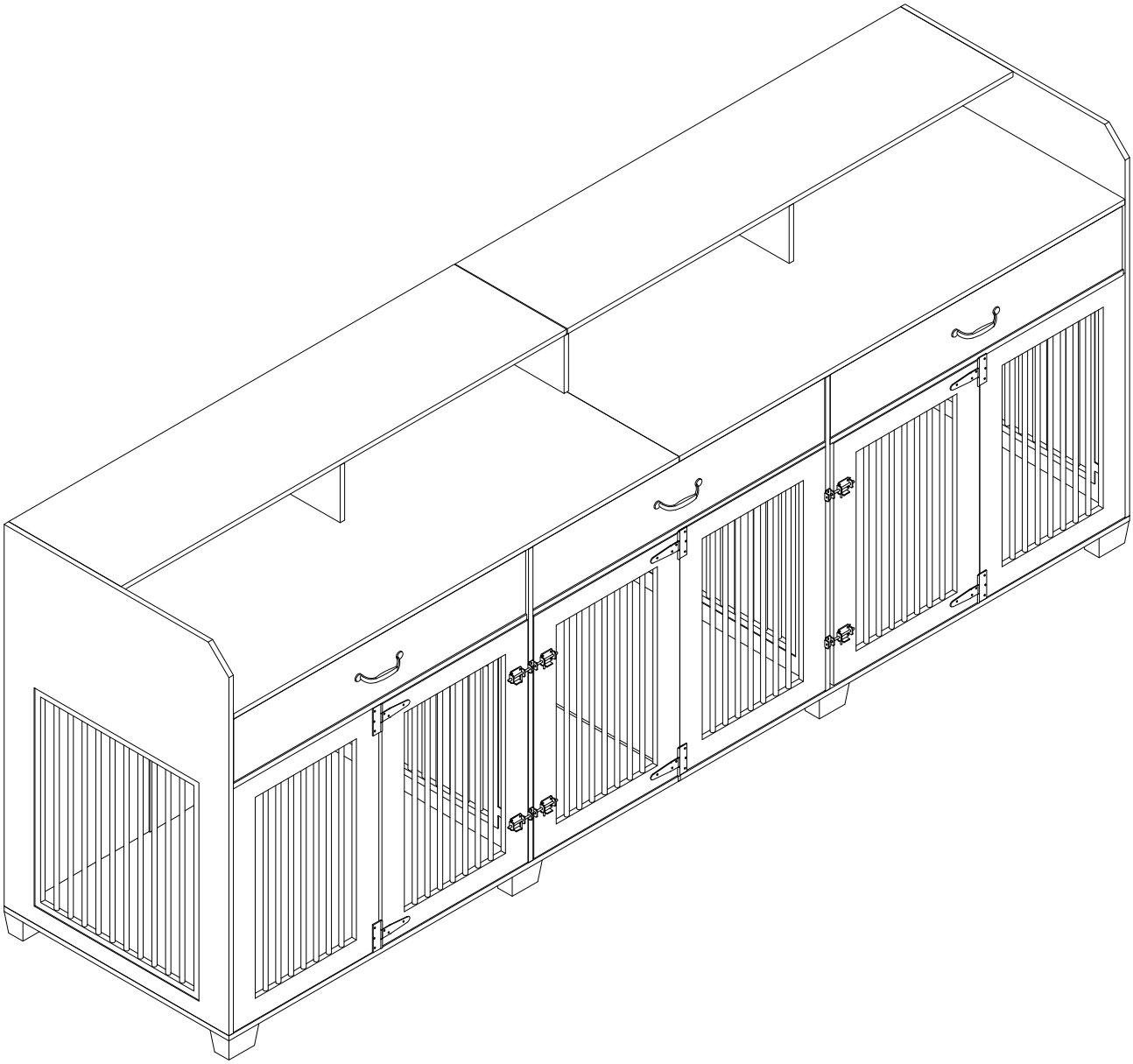

Team
Assembly
Recommended

- Please include the following information for faster assistance:

- Order number
- Purchase platform
- Purchase date
- Detailed description of the issue along with photos

Important-Please read these instructions fully before starting assembly

CUSTOMER SERVICE GUIDE

Thank you for choosing our product! We are committed to providing you with excellent service. If you find any missing parts, damaged packaging, or product damage after receiving all packages, please follow the steps below to quickly contact our customer service team. We will do our best to resolve your issue.

1. Missing Parts

Verify Parts:

1. Refer to the “Parts List” in the manual to verify the name, specifications, and quantity of the missing parts.
2. Take a clear photo of the parts list and mark the missing parts with detailed information, e.g., “Missing 5 pieces of M6x30mm screws.”

Contact Us:

· By Email:
Send an email with the subject line “Missing Parts Issue.” Include the following in the email:

· A description of the missing parts and a photo of the parts list.
· Order details (order number, purchase platform, purchase date).

2. Product or Packaging Damage

If it affects normal use:

Steps:

1. Take clear photos or videos showing the damaged parts and the extent of the damage (multi-angle shots are recommended).
2. Email the photos/videos along with other details with the subject line “Product Damage Issue.”

Resolution:

After verification, we will arrange for a replacement part, product exchange, or refund as quickly as possible.

If it does not affect normal use:

Steps:

1. Contact our customer service team
2. Provide a description of the damage and include relevant photos or videos.

Resolution:

We will provide repair guidance or an appropriate compensation plan based on the specific situation.

Helpful Tips

To process your issue efficiently, please prepare the following information:
· Order details (order number, purchase platform, purchase date).
· Clear photos or videos.
· We are committed to providing quick and professional solutions, no matter the size of the issue, to ensure your satisfaction.

Thank you for your trust and support! We hope you enjoy using our product!

Parts List—Panels

Please check you have all the panels listed below

The box 1

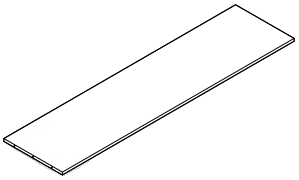

① 1190*300*12mm1*1

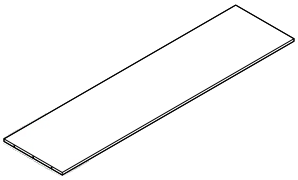

② 1190*300*12mm*1

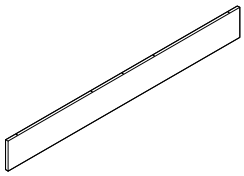

③ 1190*133*12mm*2

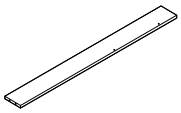

④ 784*80*12mm*1

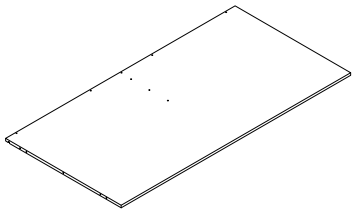

⑤ 1190*600*12mm*1

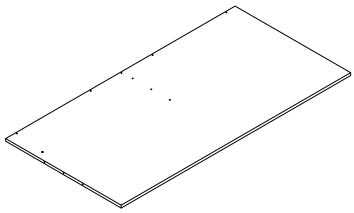

⑥ 1190*600*12mm*1

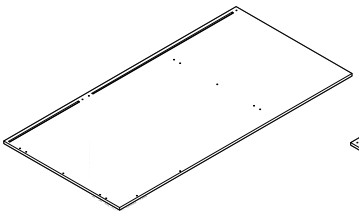

⑦ 1206*600*12mm*1

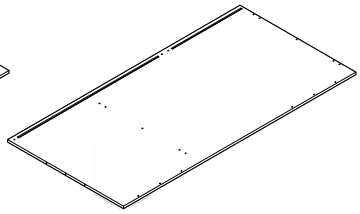

⑧ 1206*600*12mm*1



⑨ 133*288*15mm*2



⑩ 133*288*15mm*1

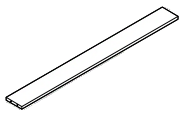

⑪ 784*80*12mm*2

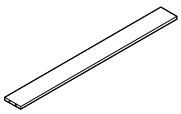

⑫ 784*80*12mm*1

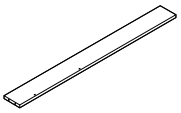

⑬ 784*80*12mm*1

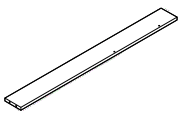

⑭ 784*80*12mm*1



⑮ 726*80*15mm*3

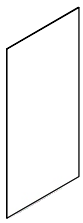

⑯ 735*361*6mm*6

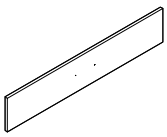

㉓ 780*146*12mm*3

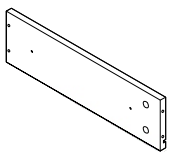

㉔ 350*100*12mm*3

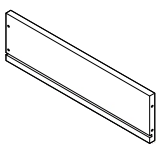

㉕ 350*100*12mm*3

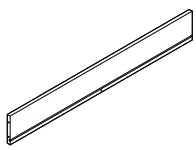

㉖ 734*100*12mm*1

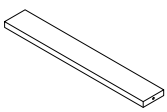

㉘ 338*50*12mm*3

Parts List—Fittings

Please check you have all the fittings listed below

The box 1

Note: The quantities below are the correct amount to complete the assembly. in some cases more fittings may be supplied than are required.

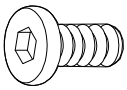 Ⓐ 6*12mm Bolt*6	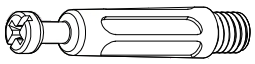 Ⓑ 6*40mm Cam Bolt*85+3	 Ⓒ Camlock*97+5
 Ⓓ 6*30mm Wooden Dowel*40+3	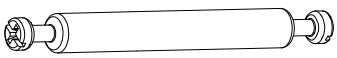 Ⓔ 6*60mm Cam Bolt*6+1	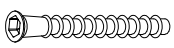 Ⓕ 5*40mm Screw*51+1
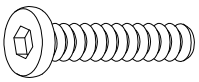 Ⓖ 8*40mm Blot*8	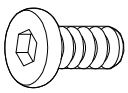 Ⓗ 6*20mm Blot*16+1	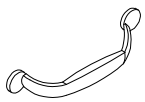 Ⓘ *3
 Ⓙ 4*16mm Blot*6+1	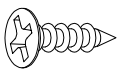 Ⓚ 3.2*12mm Screw*98+4	 Ⓛ *3
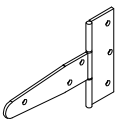 Ⓞ *6	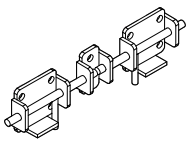 Ⓟ *2	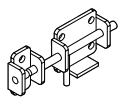 Ⓠ *2
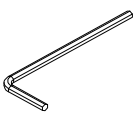 Ⓢ M3 *1	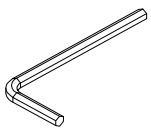 Ⓣ M4 *1	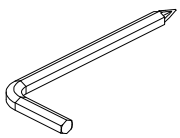 Ⓤ M5 *1
 Ⓝ *6	 Ⓡ *3	

Parts List—Panels

Please check you have all the panels listed below

The box 2

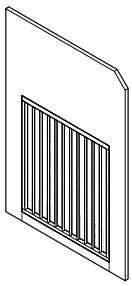

⑰ 883*600*15mm*1

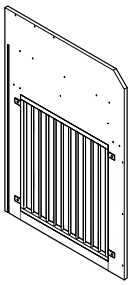

⑱ 883*600*15mm*1

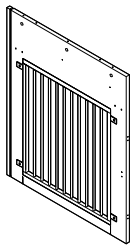

⑲ 725*600*15mm*1

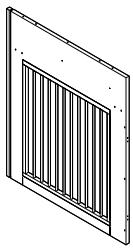

⑳ 725*600*15mm*1

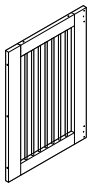

㉑ 564*390*15mm*2

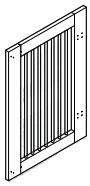

㉒ 560*390*15mm*3

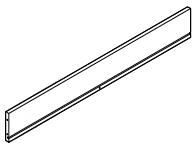

㉖ 734*100*12mm*2

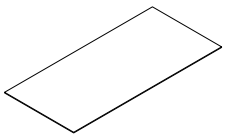

㉗347*743*3mm*3



㉙ 80*40*50mm*8

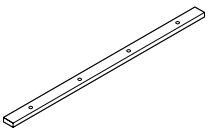

㉚ 500*30*10mm*4

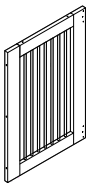

㉛ 564*390*15mm*1

Exploded view

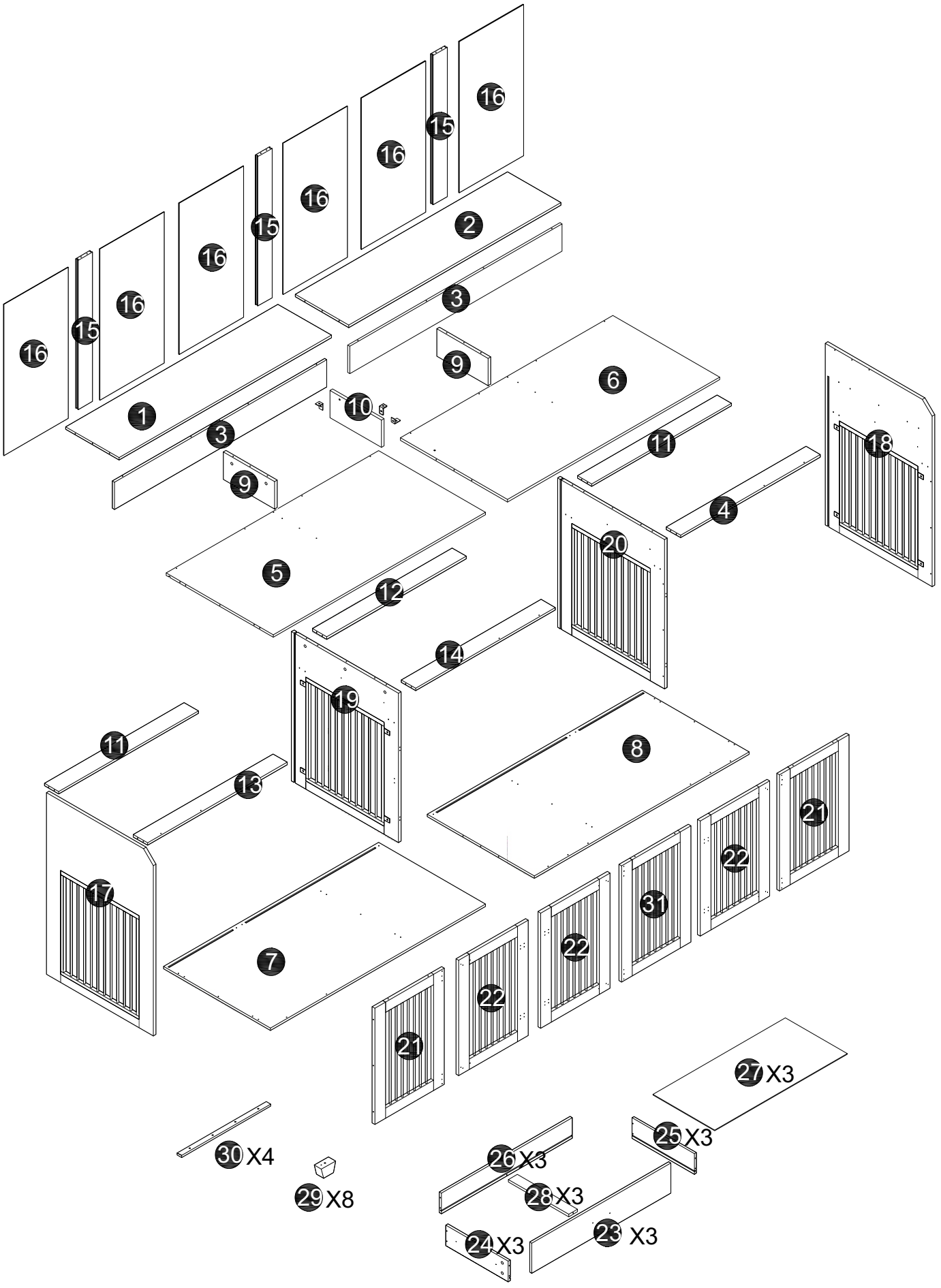

Assembly Instructions

Step 1

push in release leverto
pull outslide runner (D2)

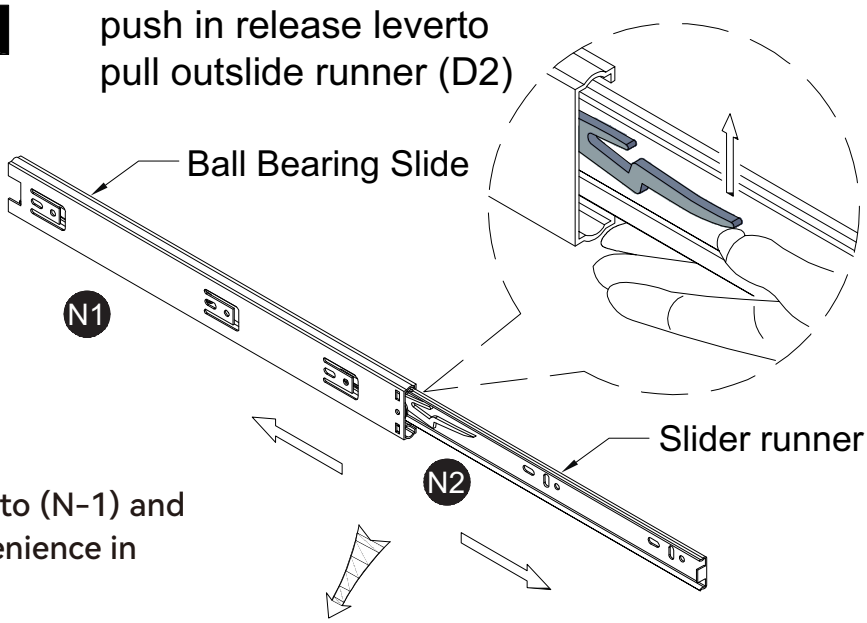

N x 6

Separate (N) into (N-1) and (N-2) for convenience in assembly.

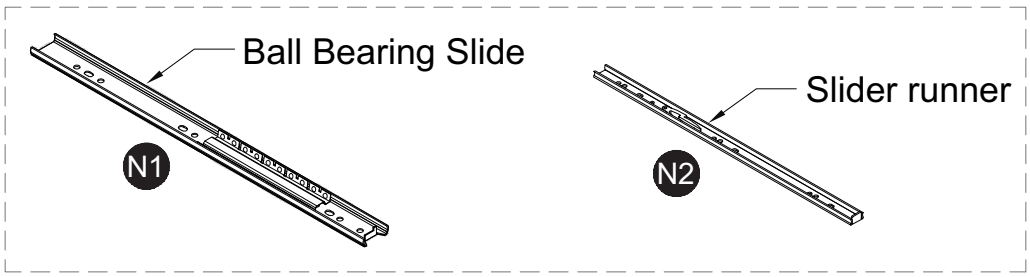

X6

Step 2

Attention:

FRONT

1. Please locate the holes from the back of part N1.

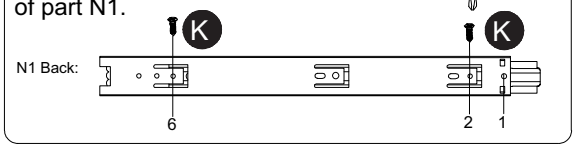

K x 8 M3.2*12

N1 x 2

R x 2

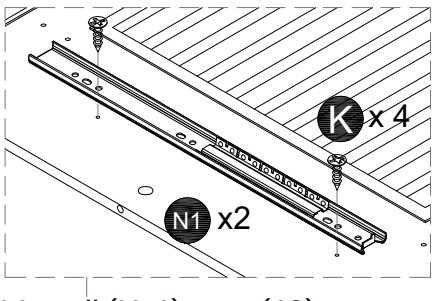

1.Install (N-1) onto (19) and tighten with (K).

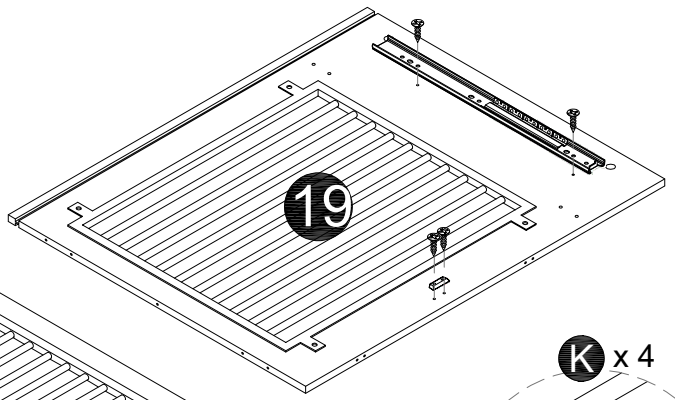

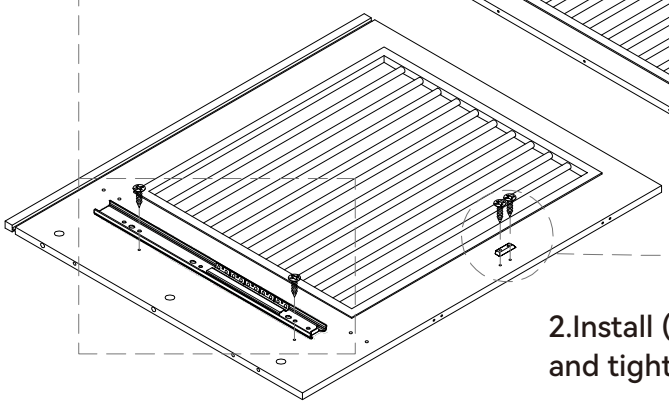

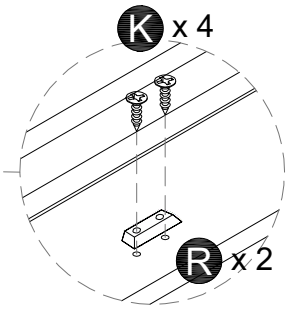

2.Install (R) onto (19) and tighten with (K).

Assembly Instructions

Step 3

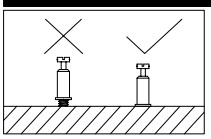

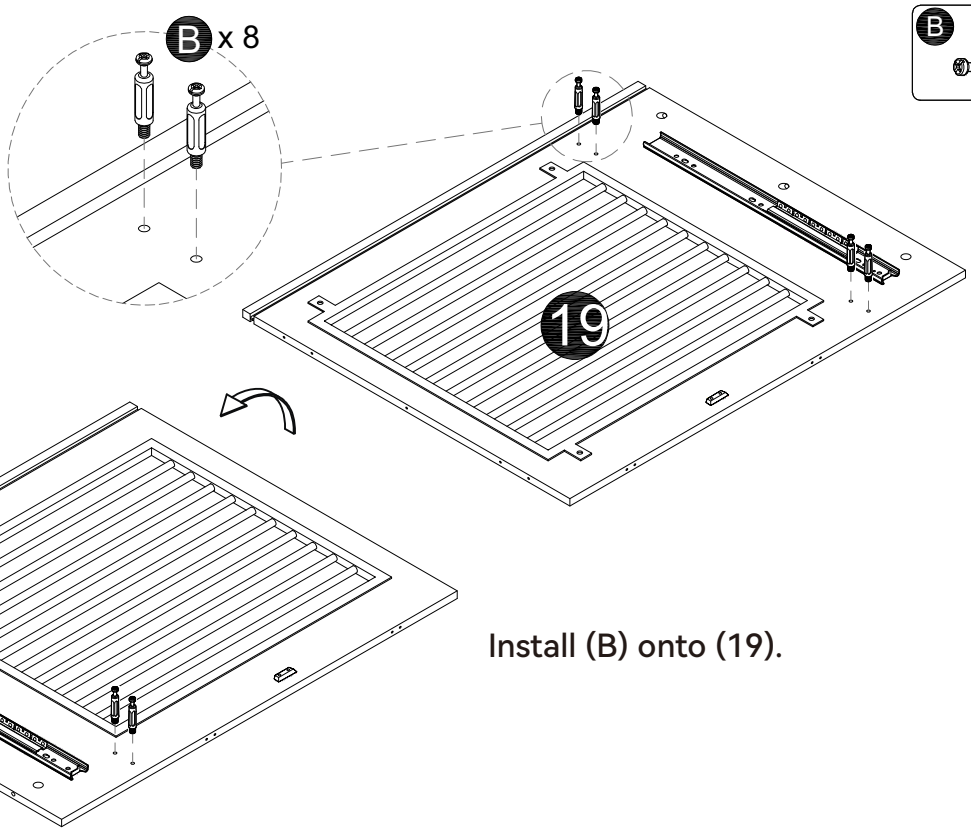

B x 8

Install (B) onto (19).

Step 4

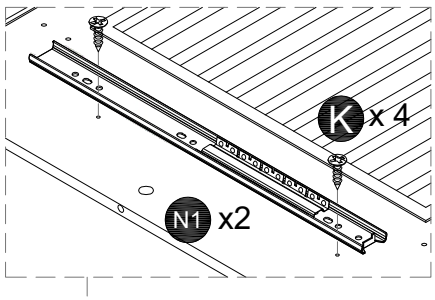

1.Install (N-1) onto (20) and tighten with (K).

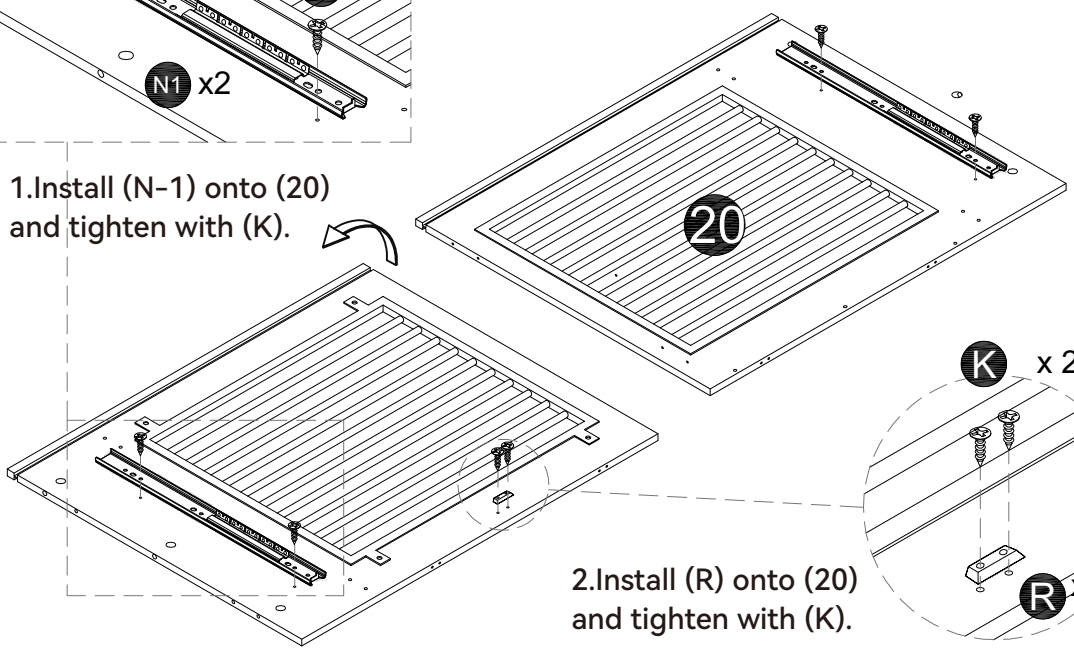

2.Install (R) onto (20) and tighten with (K).

Attention:

FRONT

1. Please locate the holes from the back of part N1.

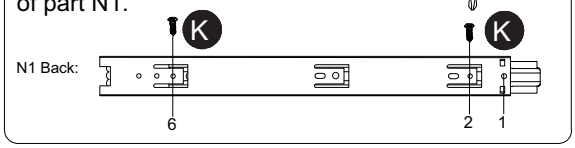

K x 6
M3.2*12

N1 x 2

R x 1

Assembly Instructions

Step 5

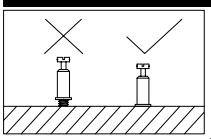

B x 10

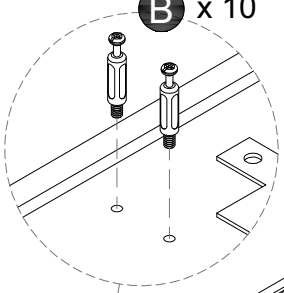

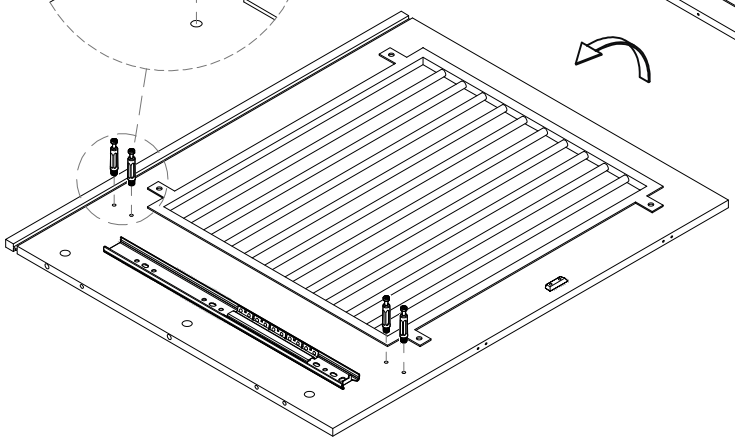

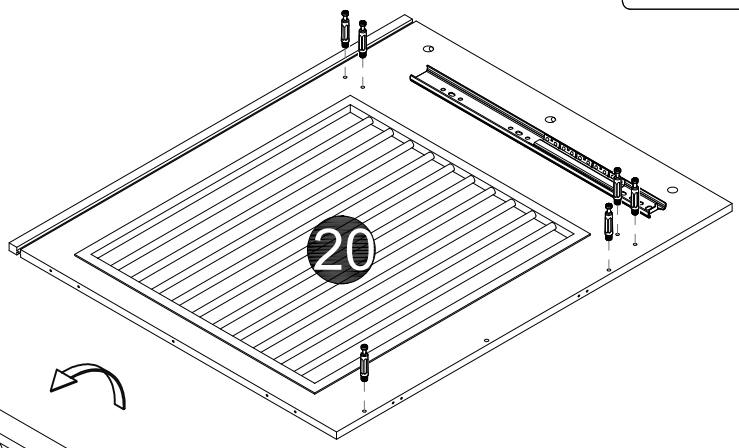

B x 10

Install (B) onto (20).

Step 6

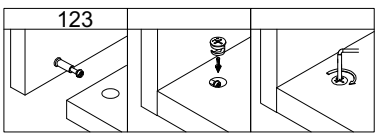

C x 4

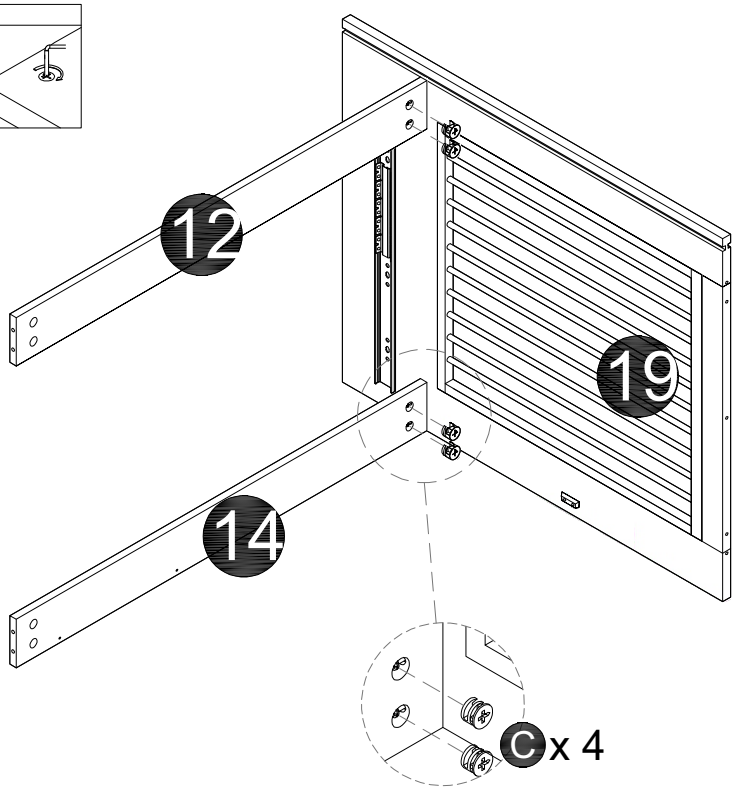

Install (12) and (14) onto (19) and tighten with (C).

Assembly Instructions

Step 7

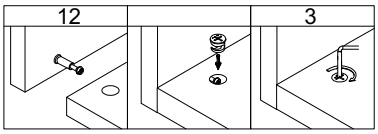

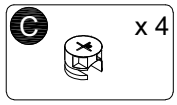

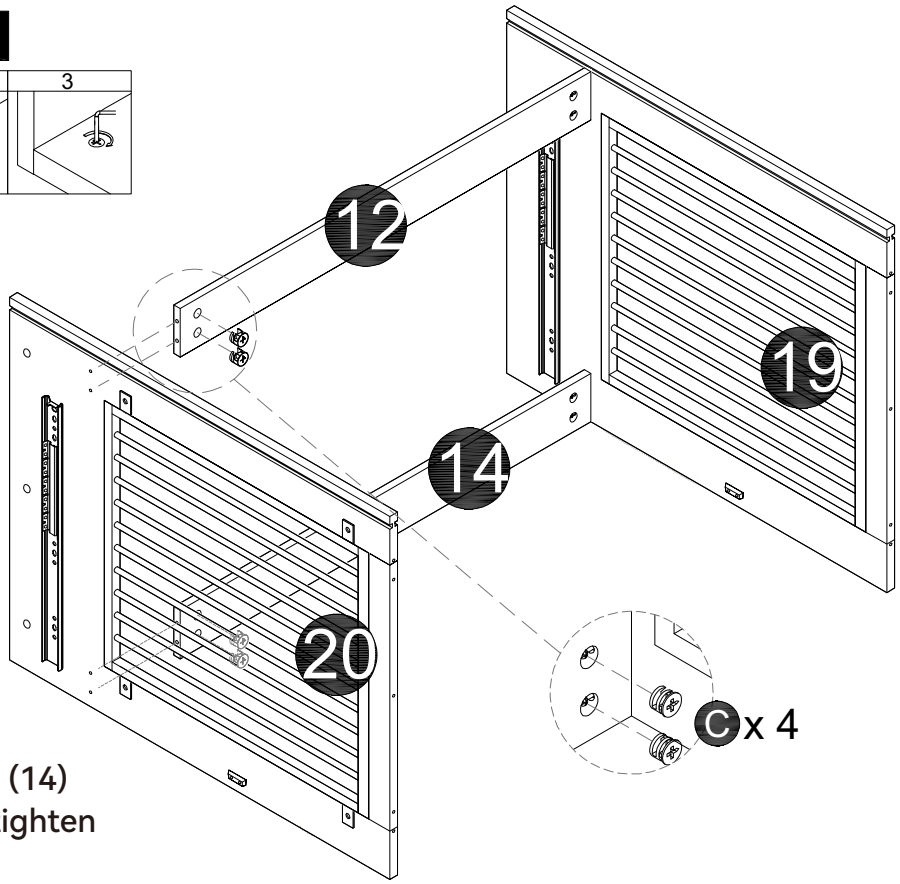

Install (12) and (14) onto (20) and tighten with (C).

Step 8

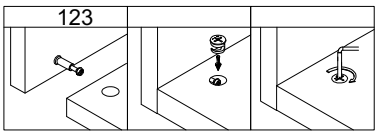

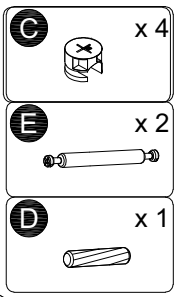

Connect (5) and (6) with (E), insert (D), and then tighten with (C).

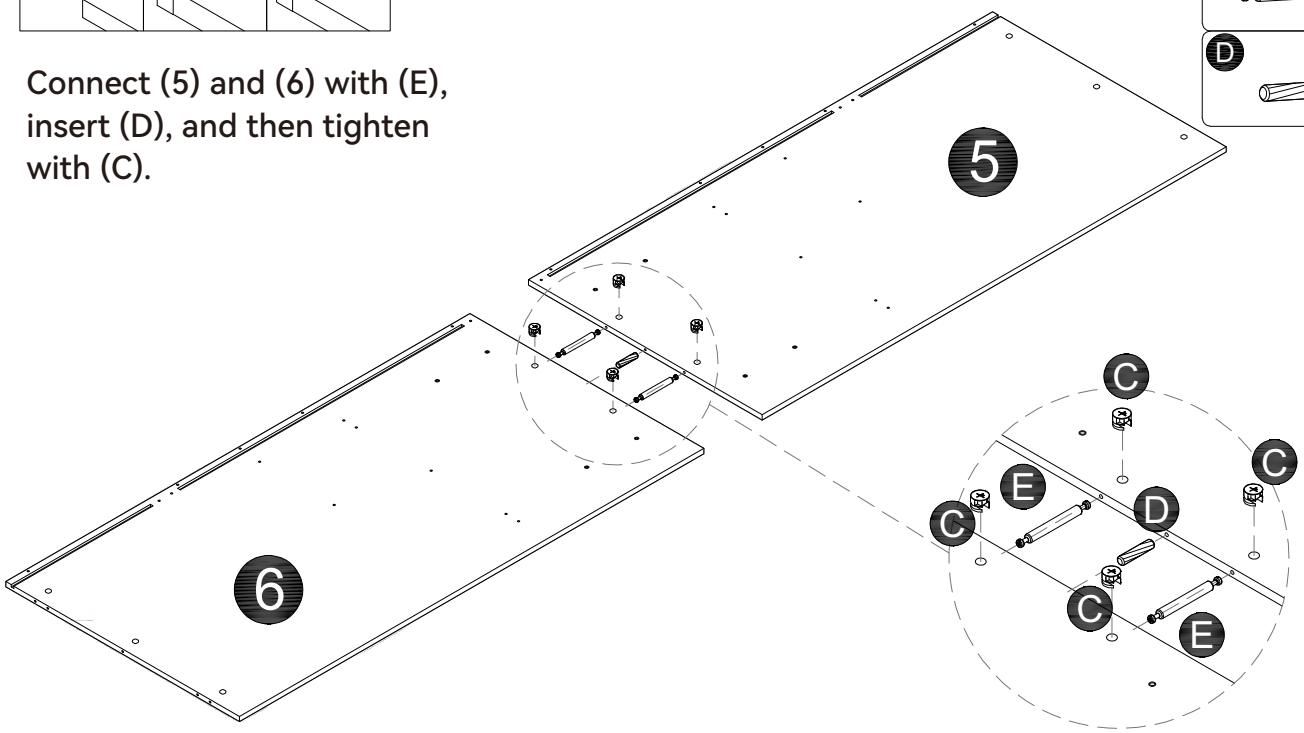

Assembly Instructions

Step 9

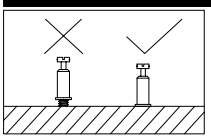

1.Reinforce the connection of (5) and (6) with (30), tighten with (H).
2.Install (B) onto (5)(6).

B x 12

H x 8 M6*20

Step 10

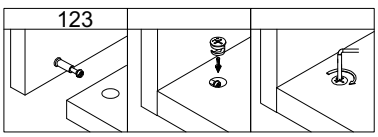

Install (19)(20) onto (5)(6), insert (D), and tighten with (C).

C x 6

D x 4

Note:
This step requires two people to assemble.

Assembly Instructions

Step 11

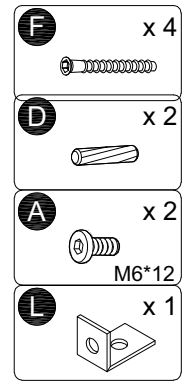

1.Install (L) onto (10) and tighten with (A).
2.Install (10) onto (5)(6) and tighten with (A).
3.Install (9) onto (5)(6), insert (D), and tighten with (C).

Assembly Instructions

Step 12

F x 8

D x 2

Install (3) onto (5)(6), insert (D), and tighten with (C).

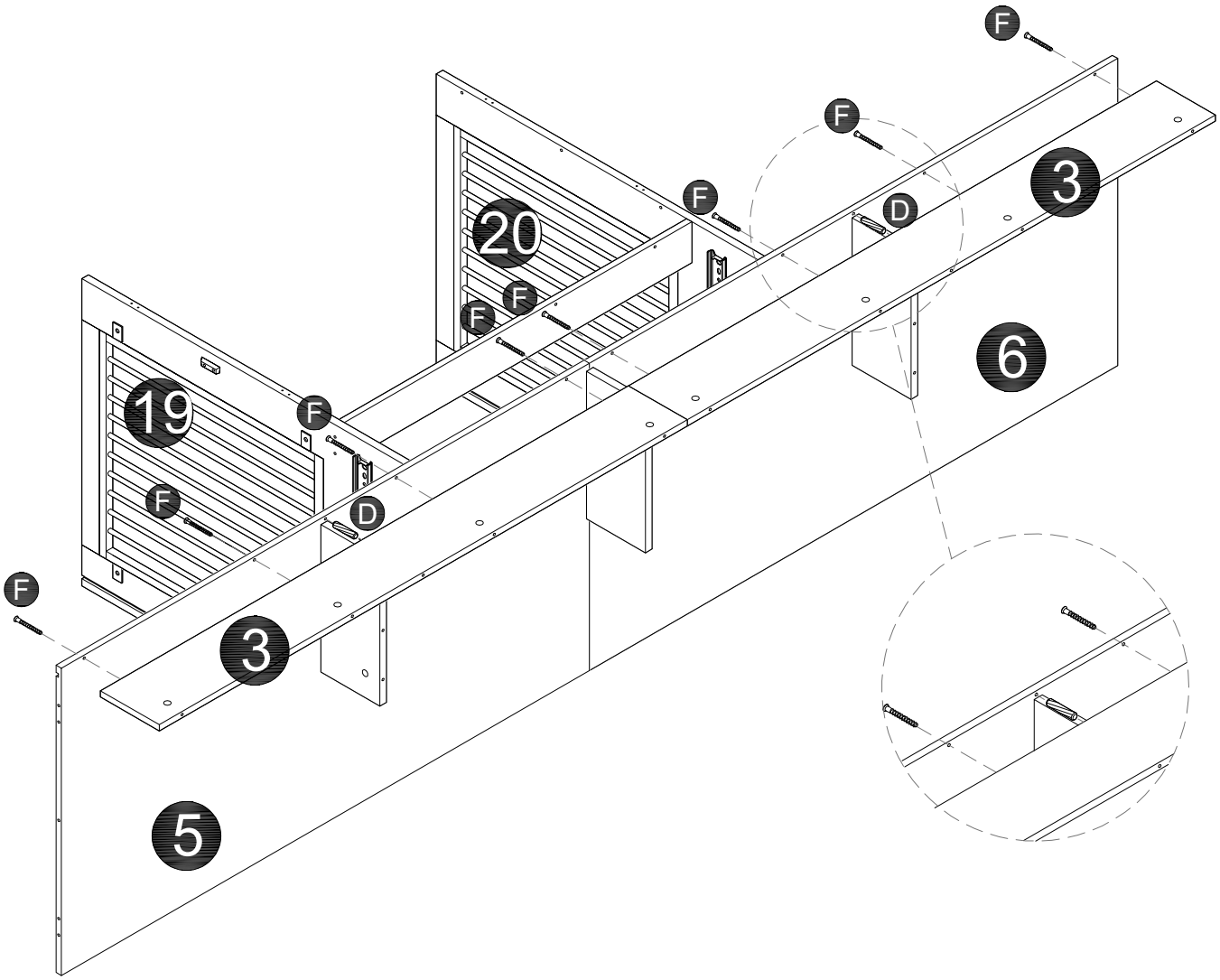

Assembly Instructions

Step 13

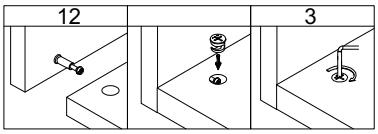

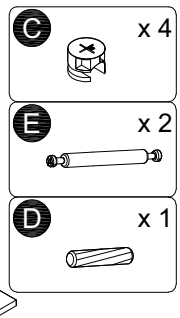

Connect (1)(2) with (E), insert (D), and tighten with (C).

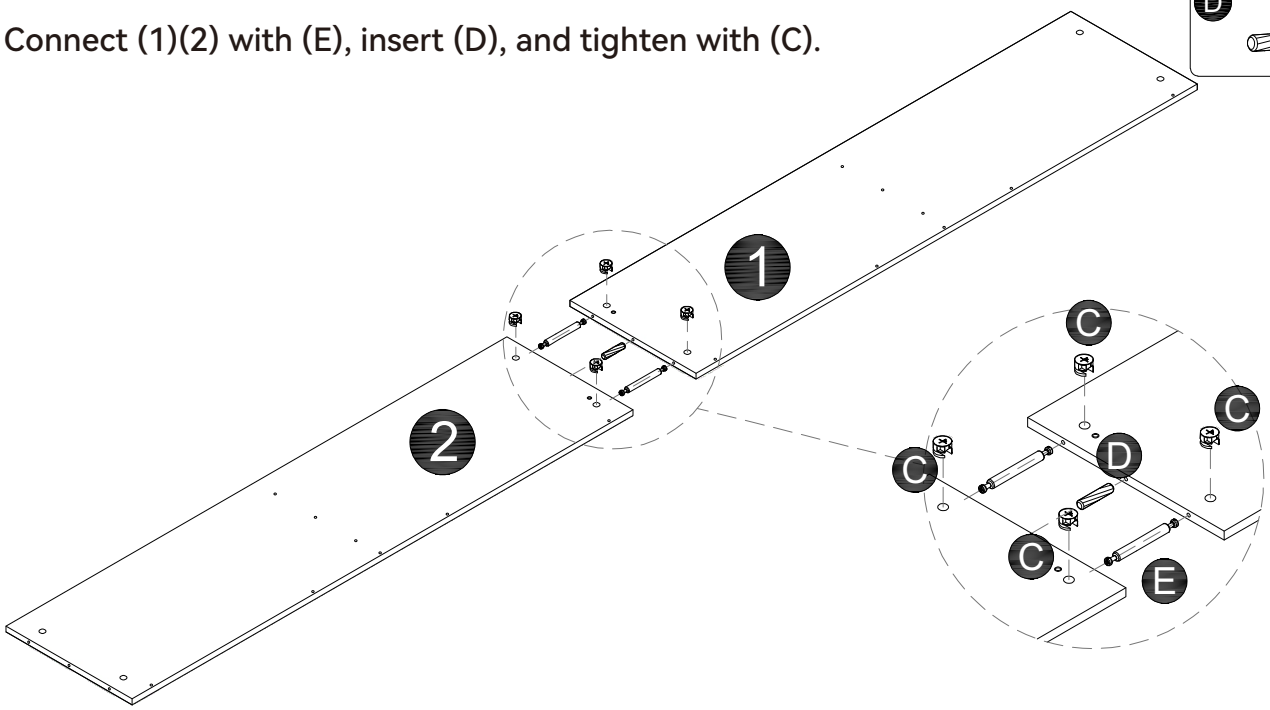

Step 14

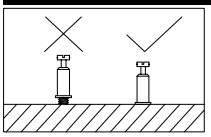

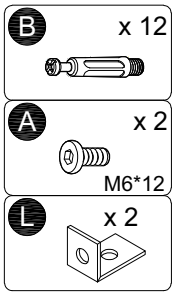

1.Install (L) onto (1)(2) and tighten with (A).
2.Install (B) onto (1)(2).

Assembly Instructions

Step 15

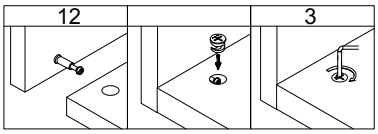

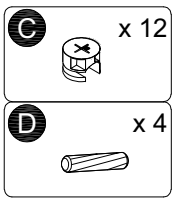

Install (1)(2) onto (3)(9)(10), insert (D), and tighten with (C).

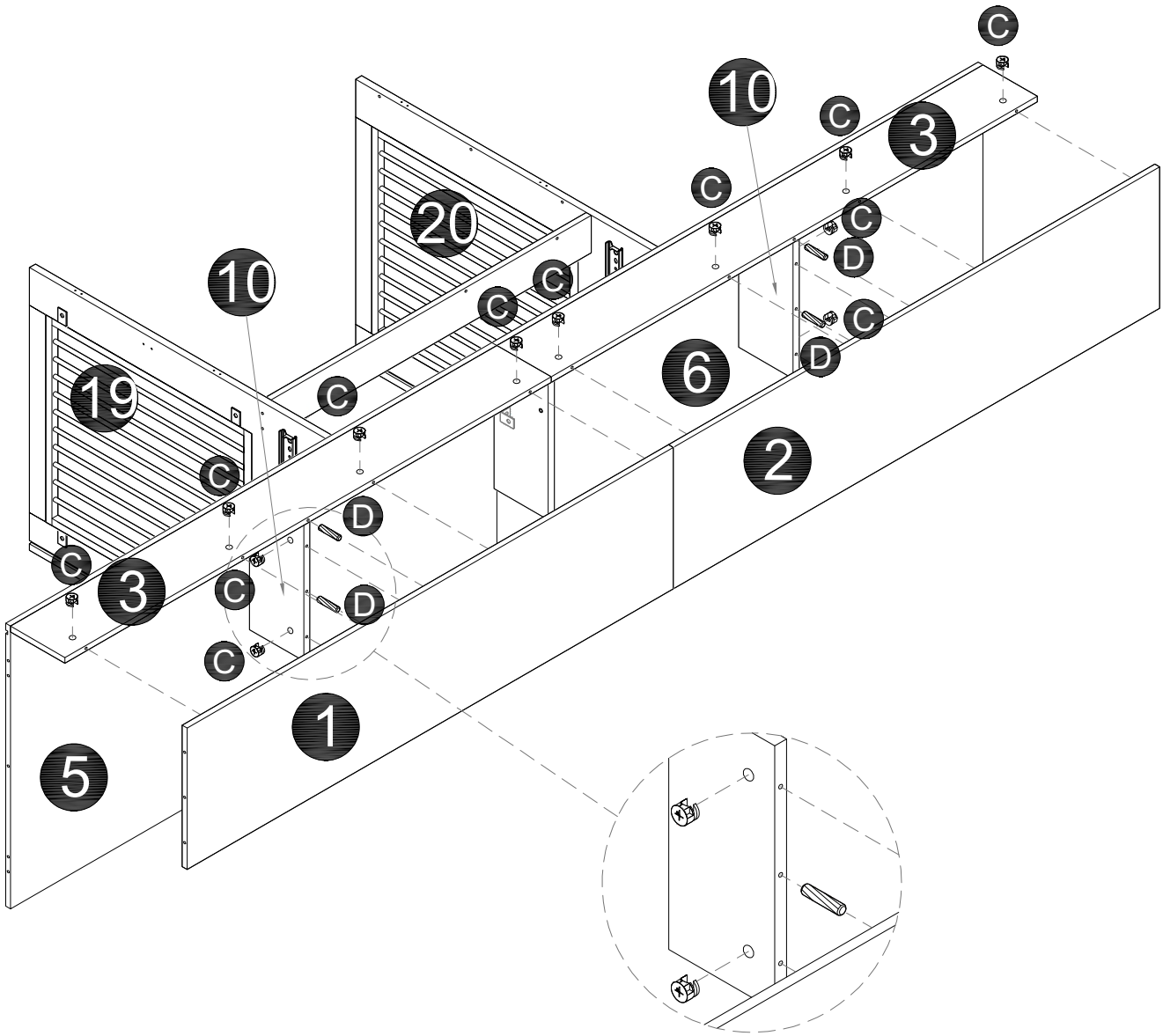

Assembly Instructions

Step 16

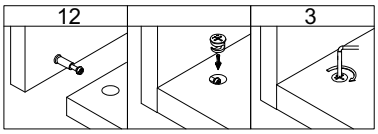

C x 8

1.Install (11)(4) onto (20) and tighten with (C).
2.Install (11)(13) onto (19) and tighten with (C).

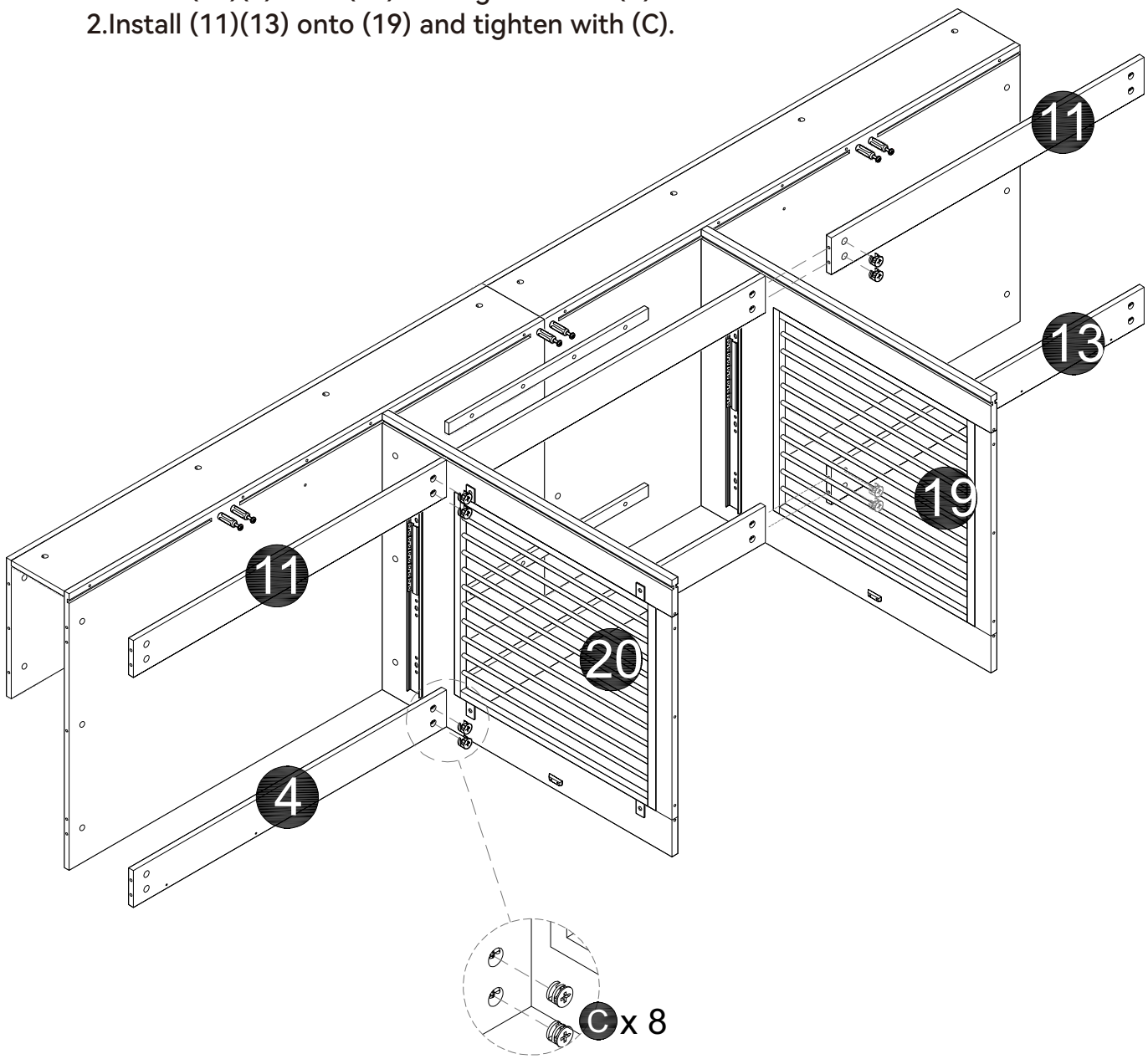

Assembly Instructions

Step 17

Attention:

1. Please locate the holes from the back of part N1.

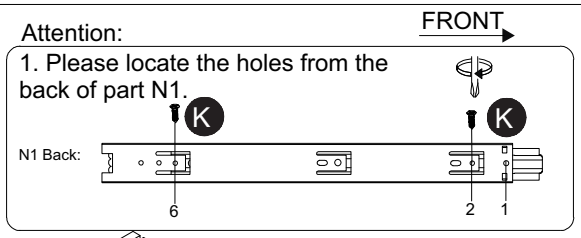

K x 4
M3.2*12

N1 x 2

Install (N-1) onto (17)(18) and tighten with (K).

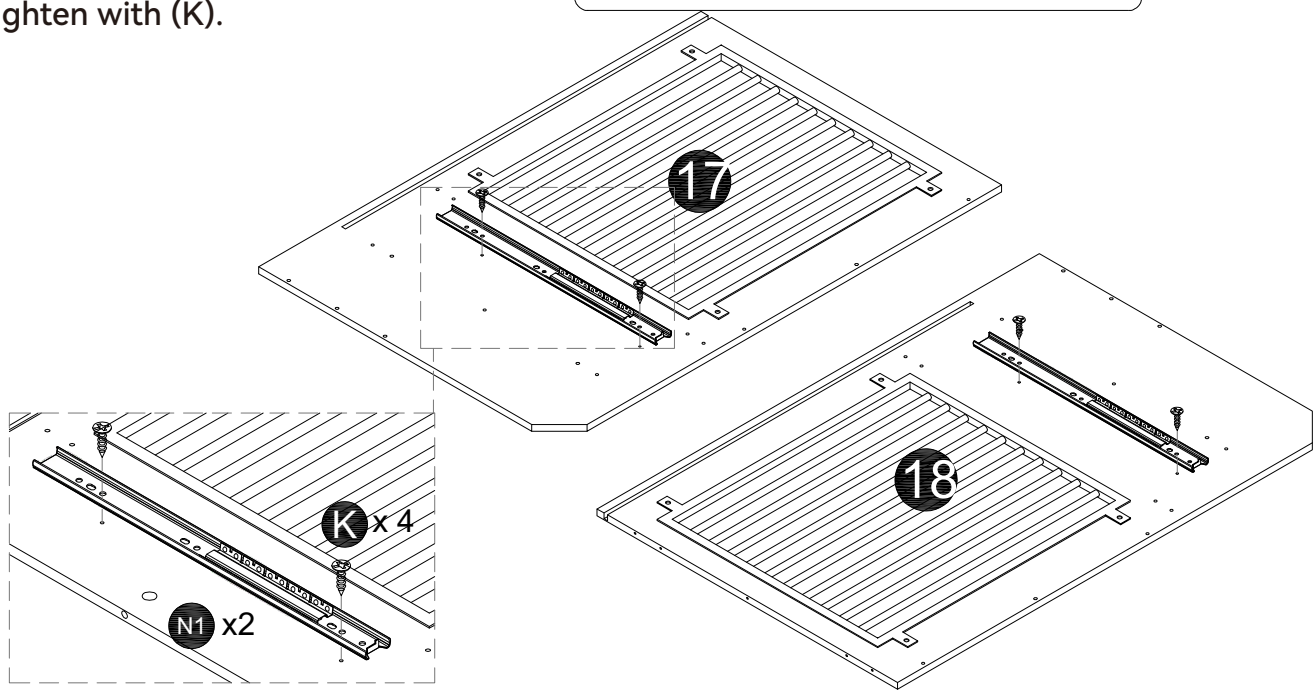

Step 18

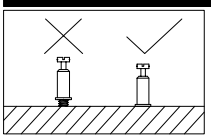

B x 22

Install (B) onto (17)(18).

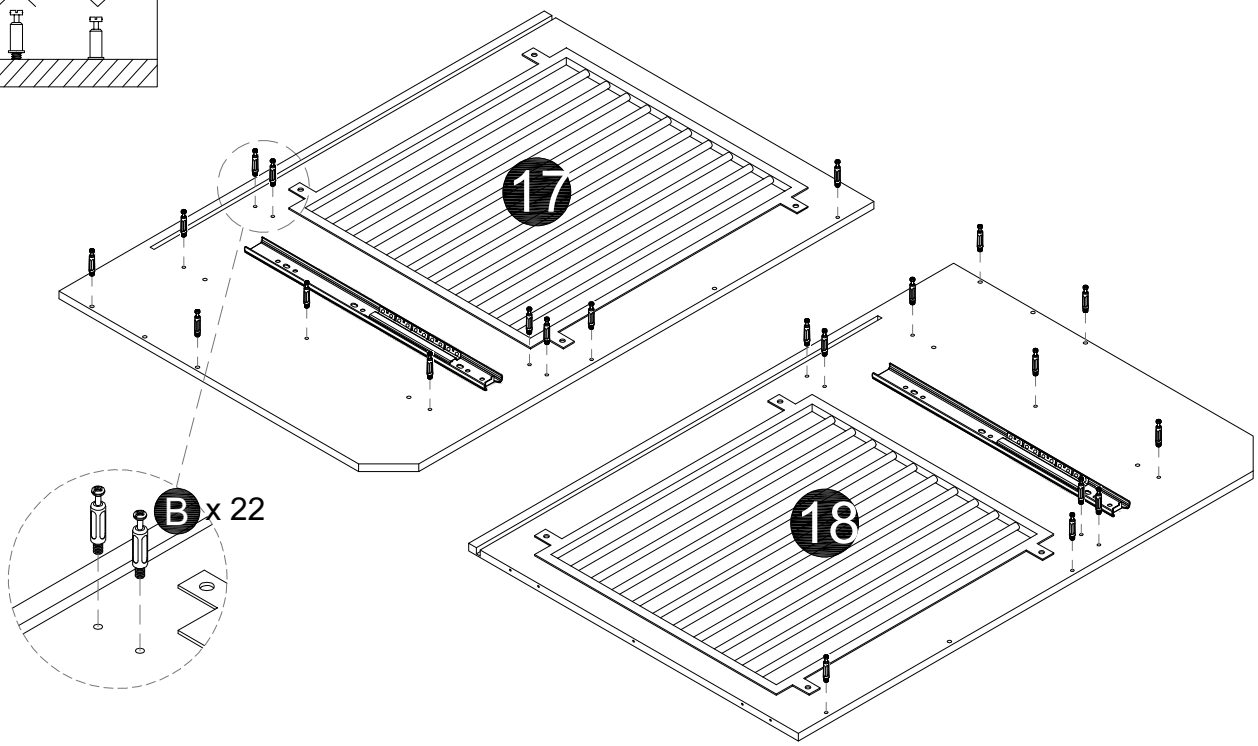

Assembly Instructions

Step 19

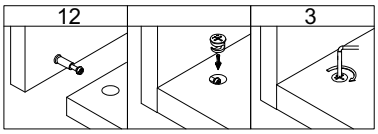

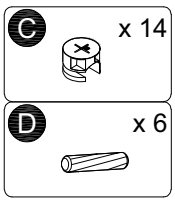

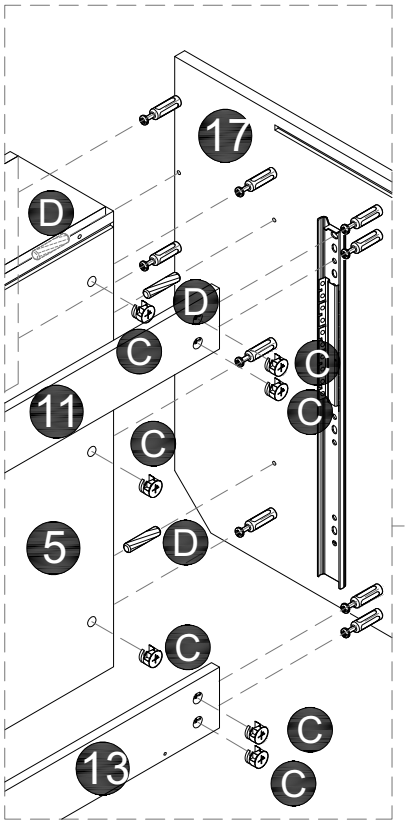

1.Install (17) onto (1)(5)(11)(13), insert (D), and tighten with (C).

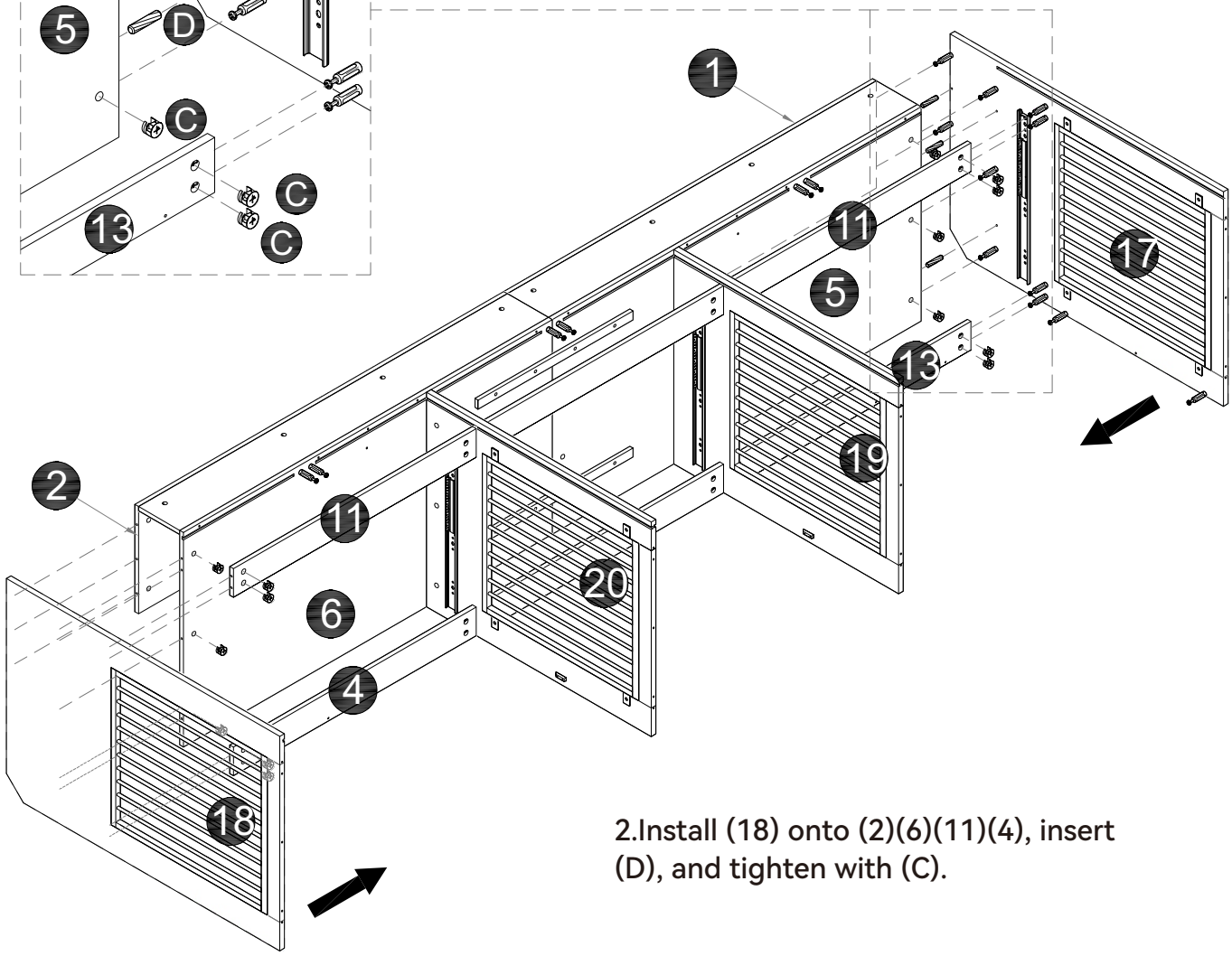

2.Install (18) onto (2)(6)(11)(4), insert (D), and tighten with (C).

Assembly Instructions

Step 20

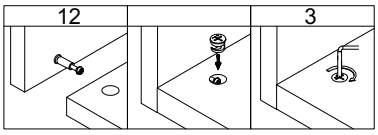

Install (15) onto (5)(6) and tighten with (C).

Step 21

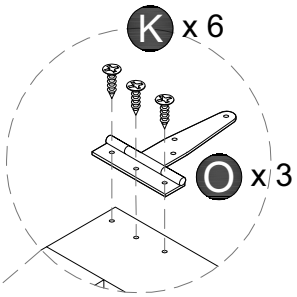

1.Install (O) onto (21) and tighten with (K).
2.Insert (D) into (21).

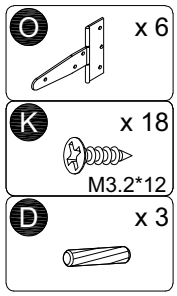

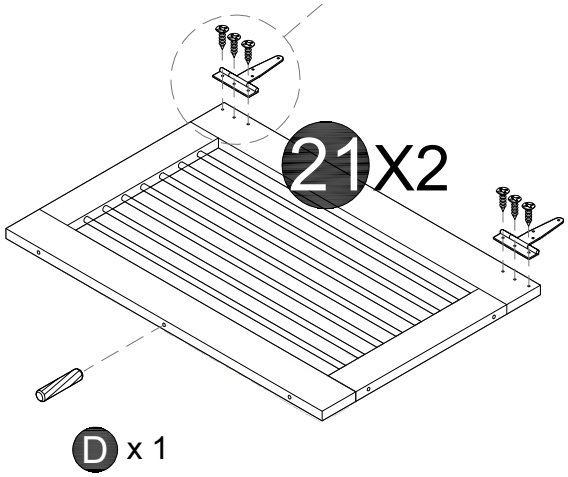

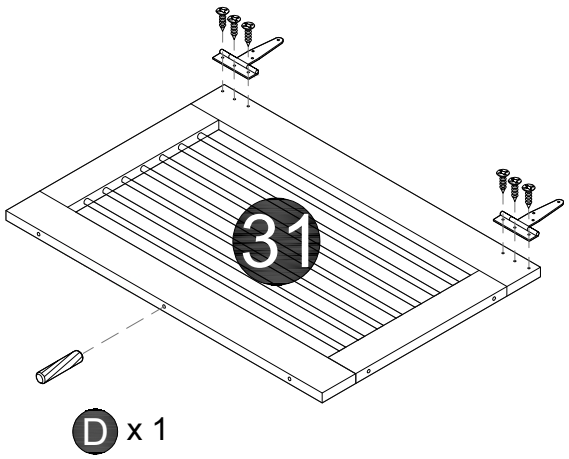

Assembly Instructions

Step 22

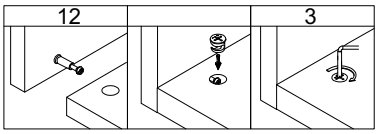

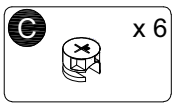

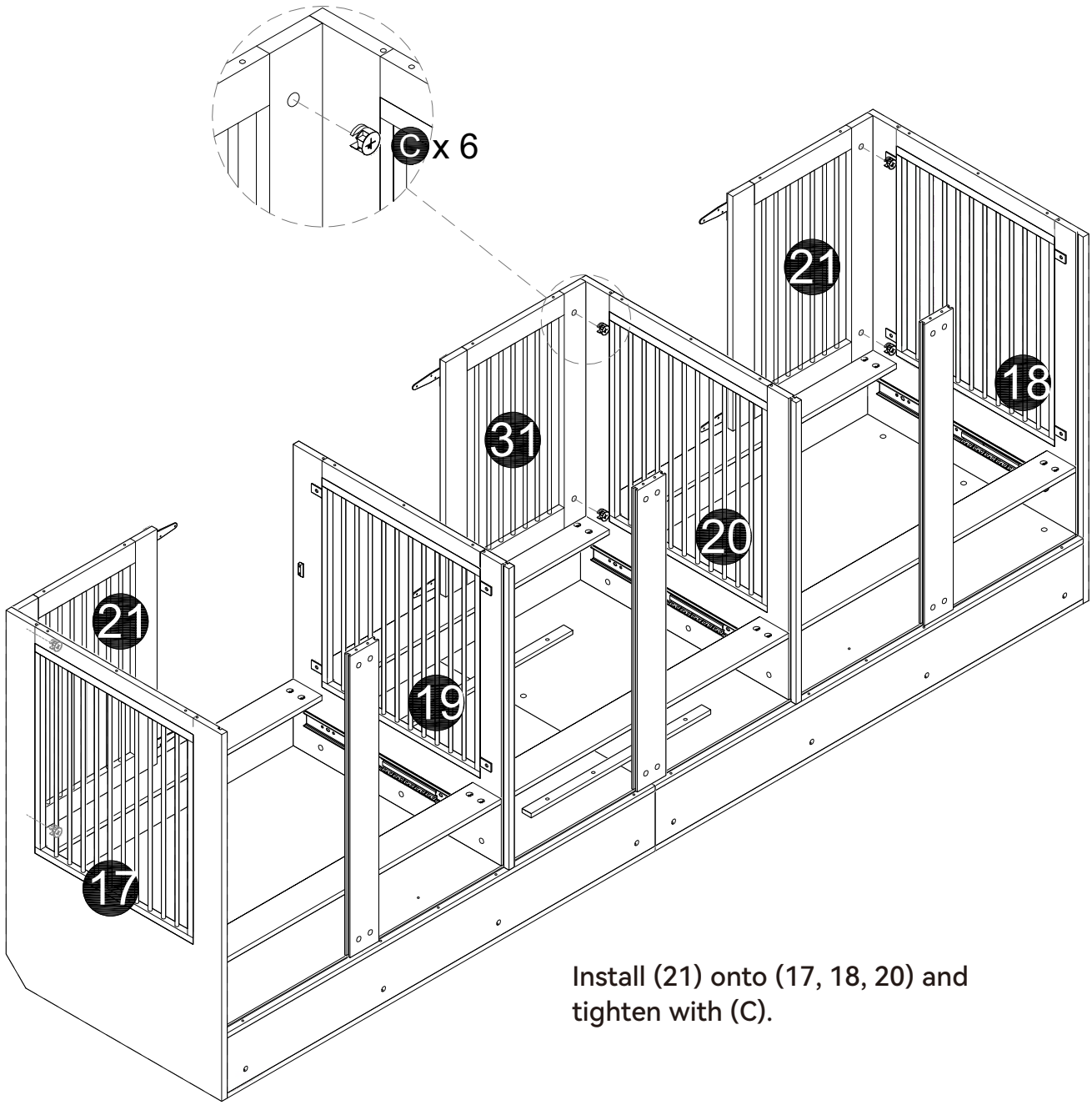

Install (21) onto (17, 18, 20) and tighten with (C).

Assembly Instructions

Step 23

Insert (16) into the backboard slot.

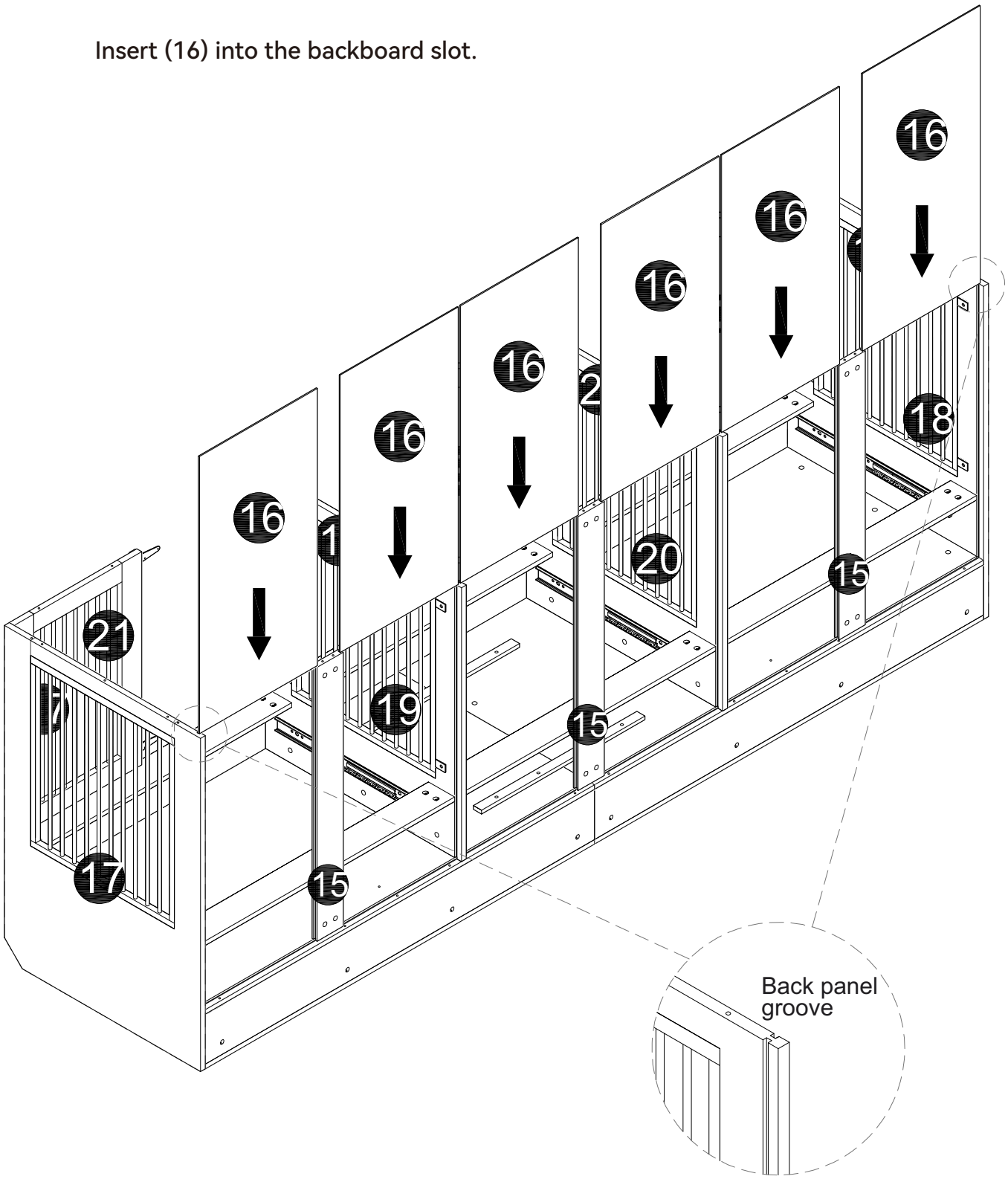

Assembly Instructions

Step 24

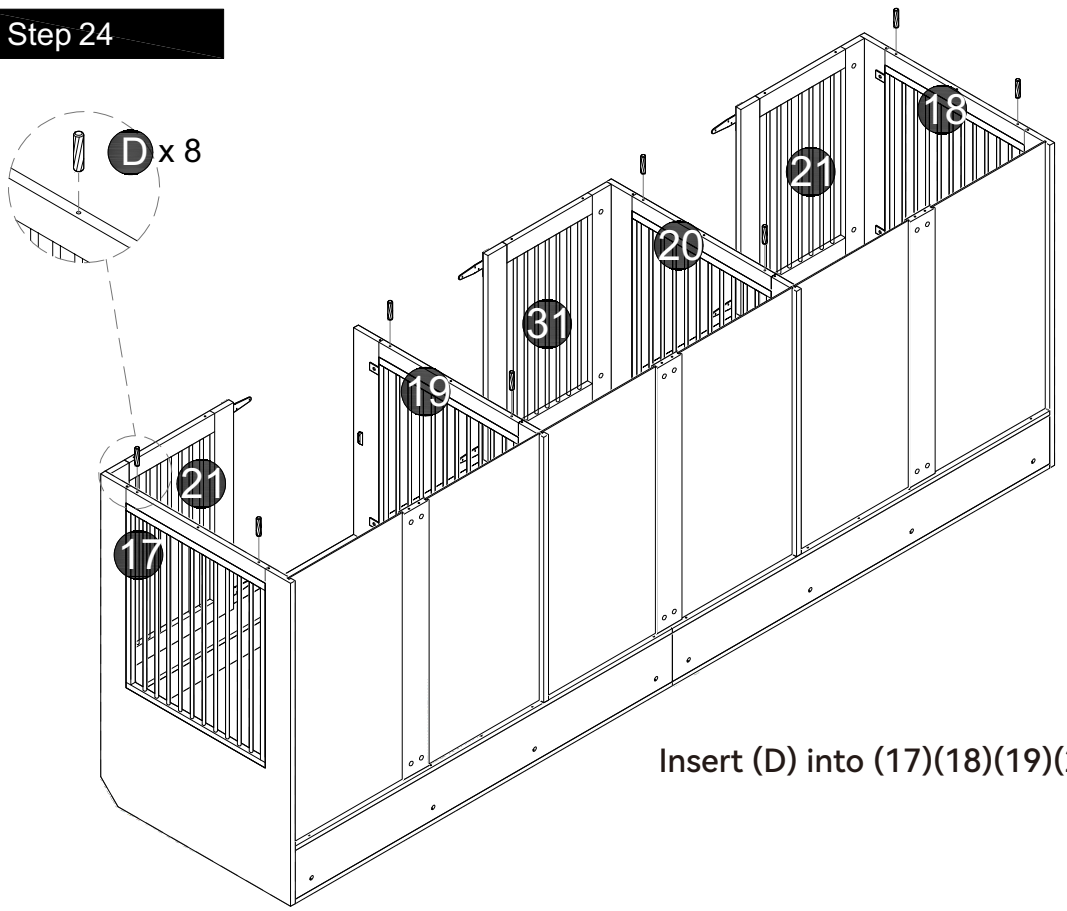

D x 8

Insert (D) into (17)(18)(19)(20).

Step 25

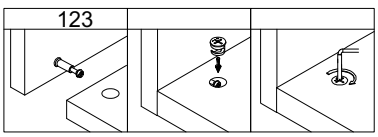

C x 4

E x 2

D x 1

Connect (7)(8) with (E), insert (D), and tighten with (C).

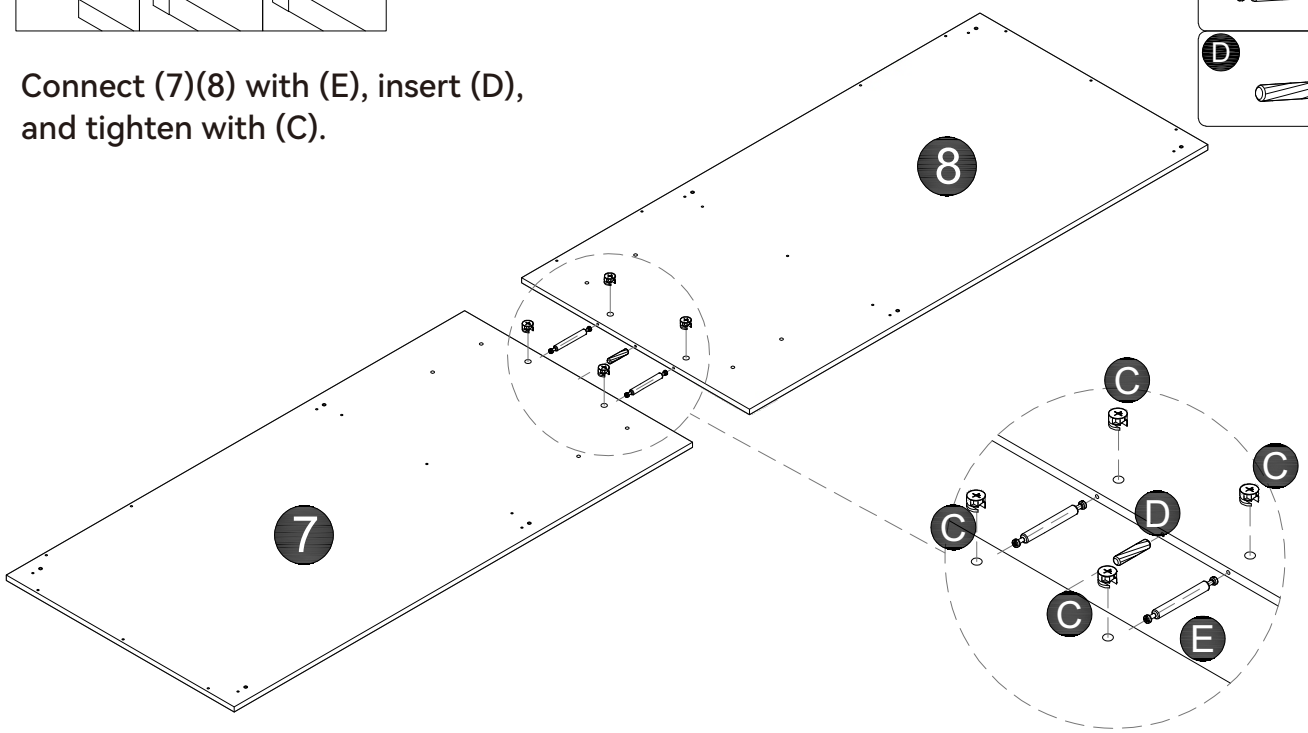

Assembly Instructions

Step 26

H x 8
M6*20

Reinforce (7)(8) with (30), tighten with (H), then flip.

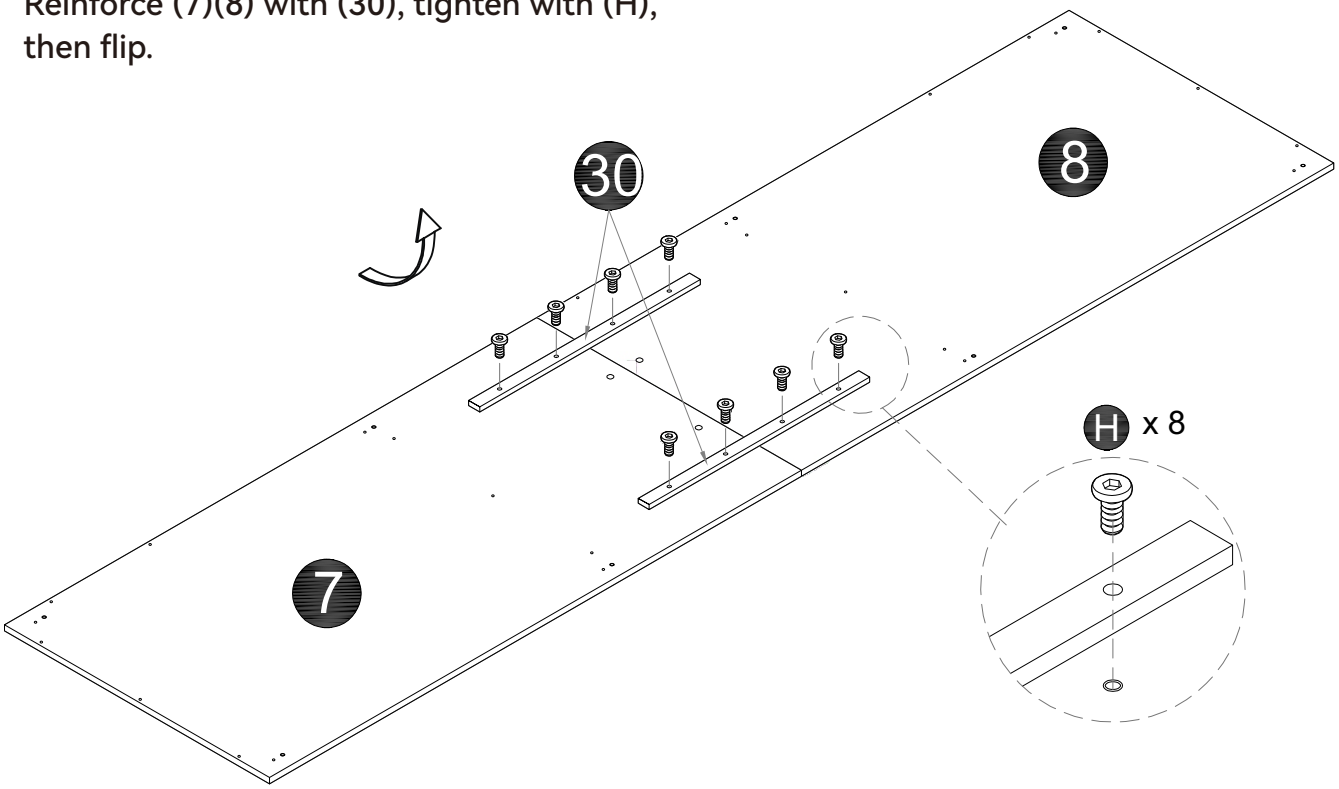

Step 27

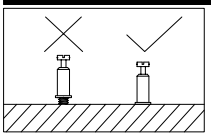

B x 6

Install (B) onto (7)(8).

Assembly Instructions

Step 28

1.Install (7)(8) onto (17)(18)(19)(20)(21) and tighten with (F).
2.Install (7)(8) onto (15) and tighten with (C).

C x 6

F x 18

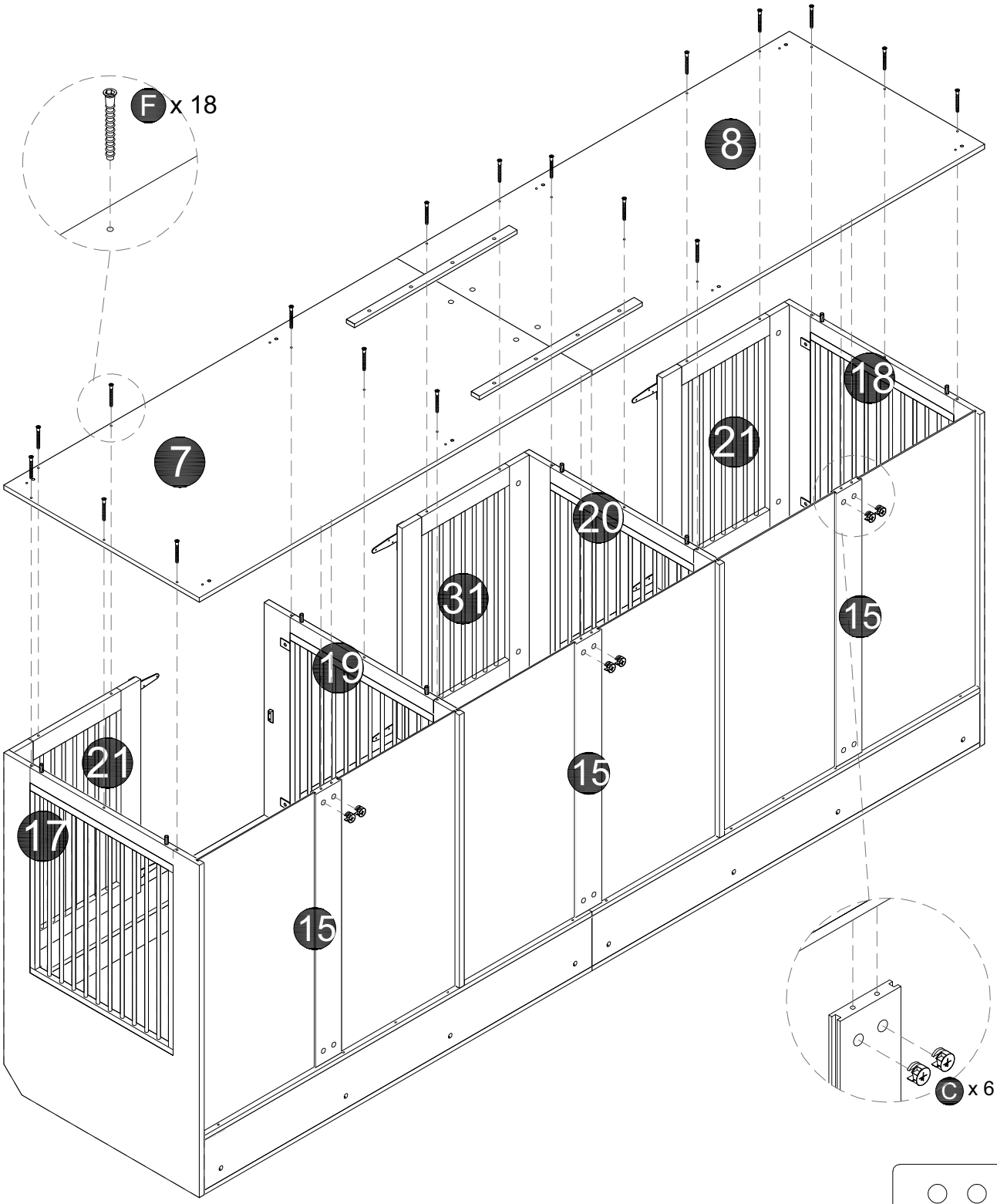

Assembly Instructions

Step 29

G x 8
M8*40

D x 8

Install (29) onto (7)(8), insert (D), tighten with (G), then turn the cabinet upright.

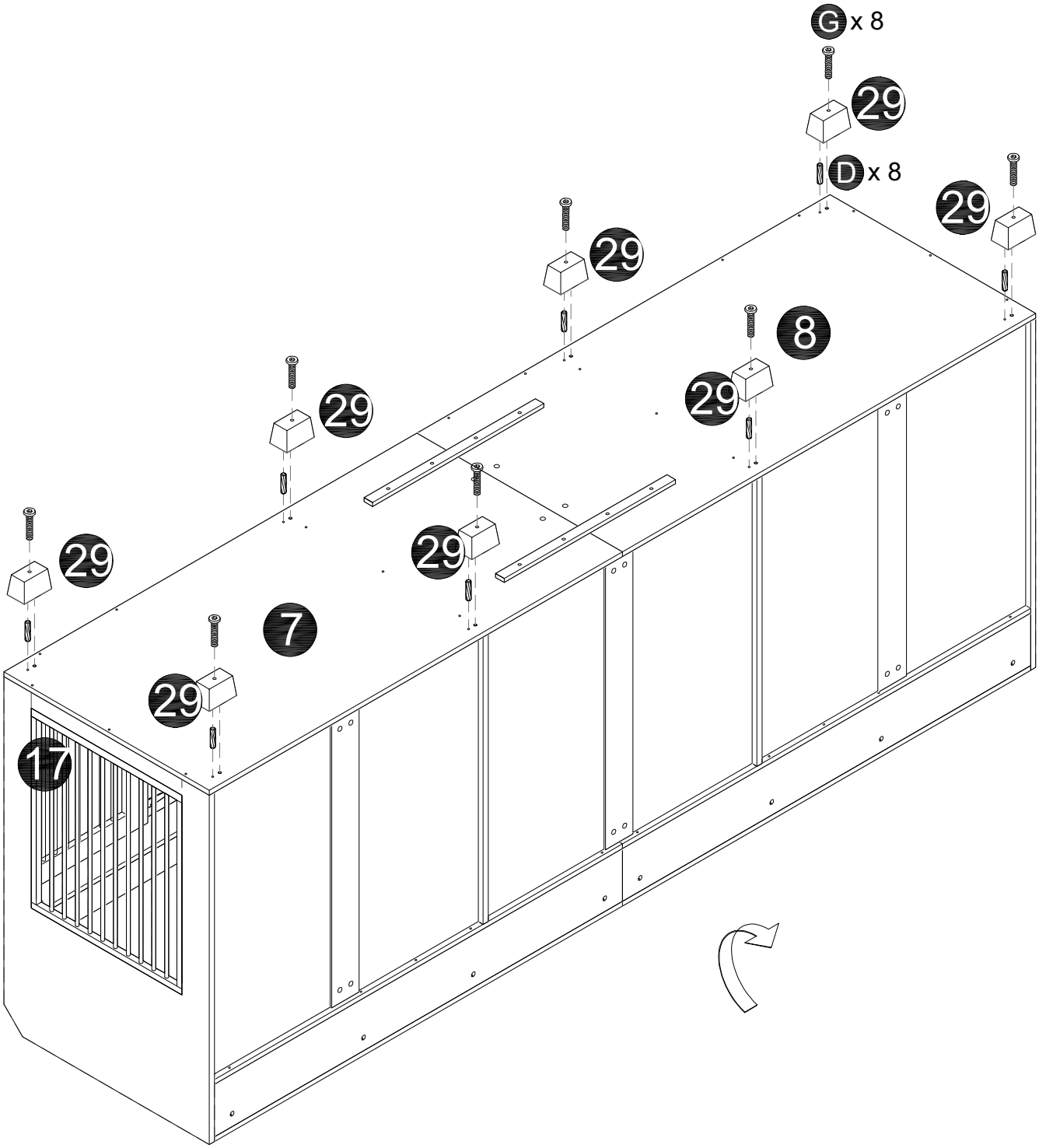

Assembly Instructions

Step 30

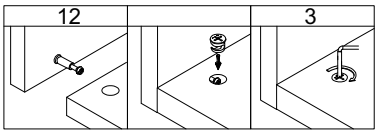

C x 4

A x 2
M6*12

F x 6
M5*40

2.Tighten the installation of (17) with (1) using (C).

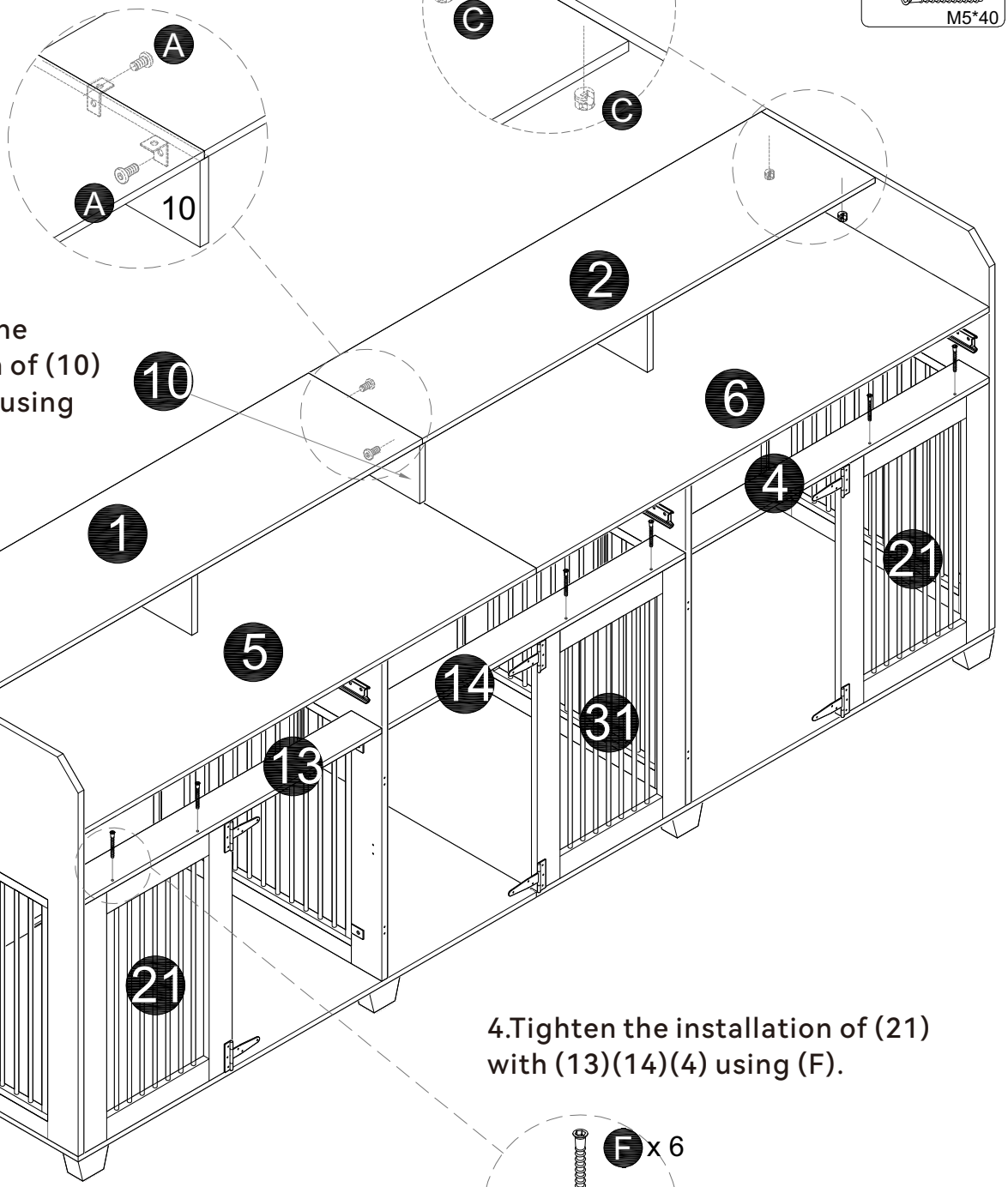

1.Tighten the installation of (10) with (1)(2) using (A).

4.Tighten the installation of (21) with (13)(14)(4) using (F).

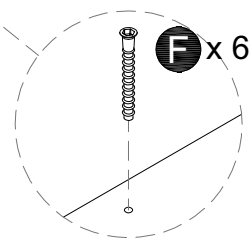

3.Tighten the installation of (18) with (2) using (C).

Assembly Instructions

Step 31

K x 50
M3.2*12

P x 2

Q x 2

1.Install (22) onto (21) and tighten with (K).
2.Install (P) onto (22)(19) and tighten with (K).
3.Install (Q) onto (22)(19) and tighten with (K).

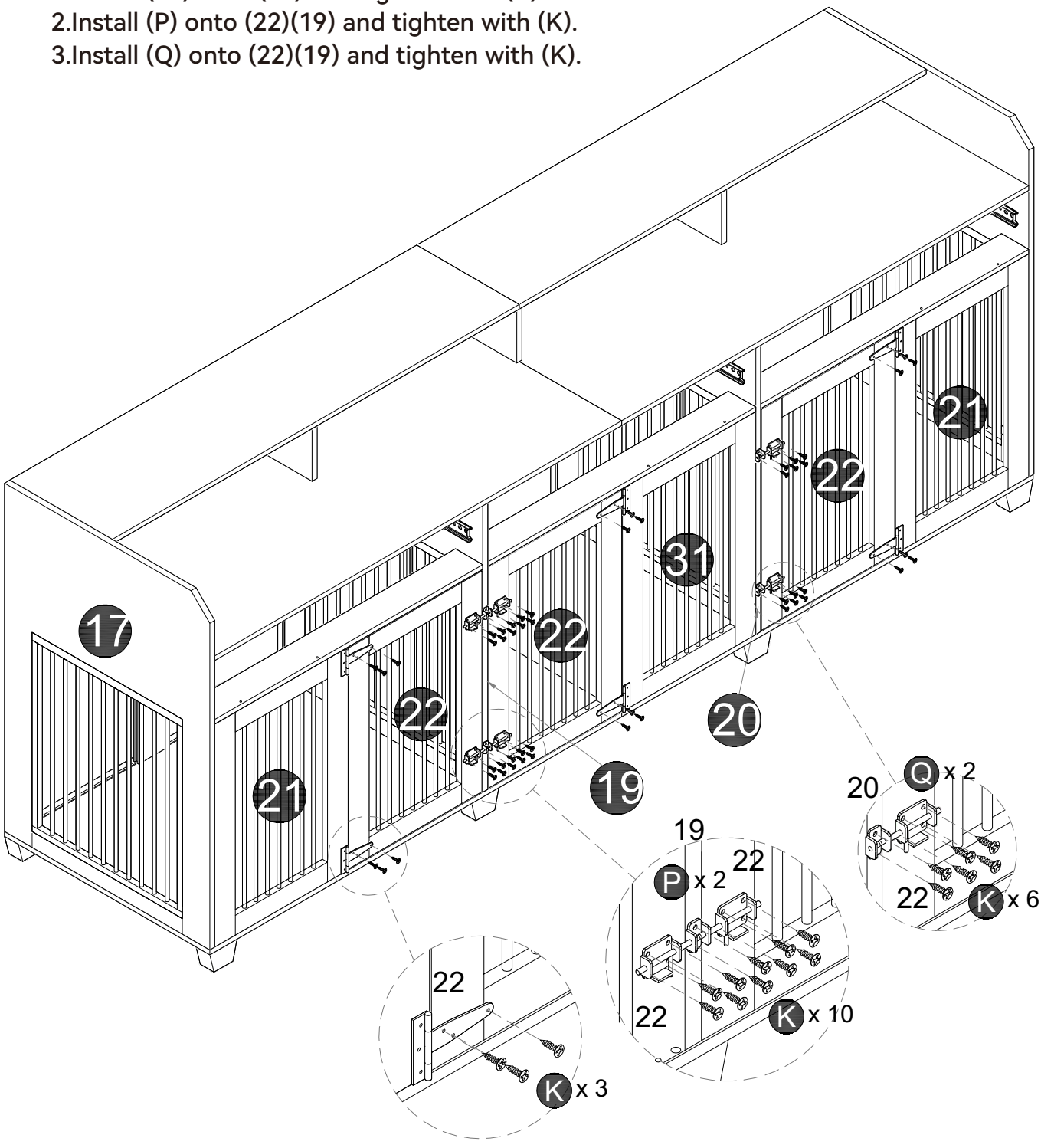

Assembly Instructions

Step 32

F x 15

M5*40

Install (24)(25)(28) onto (26) and tighten with (F).

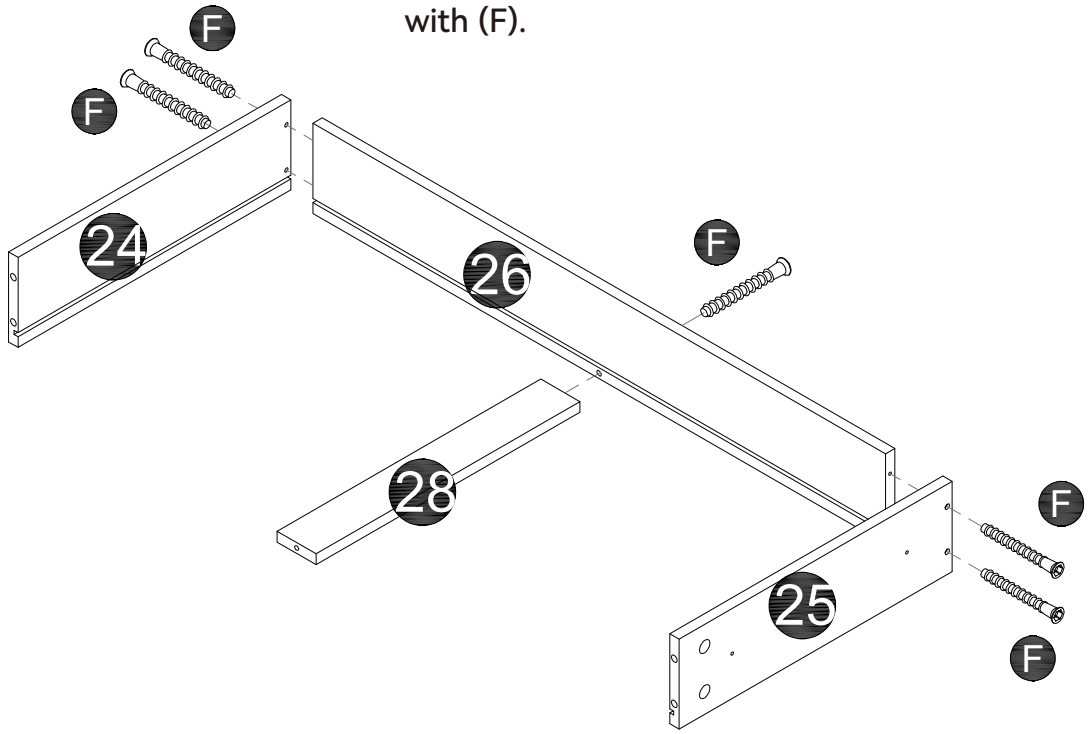

X3

Step 33

Insert (27) into the baseboard slot.

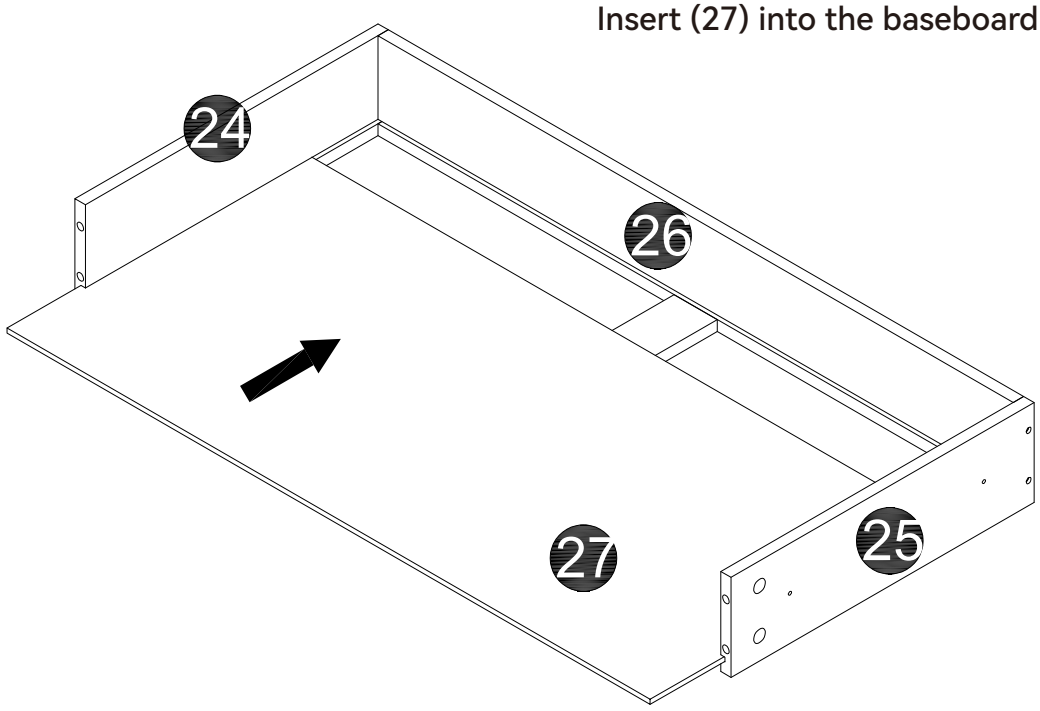

X3

Assembly Instructions

Step 34

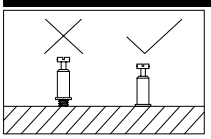

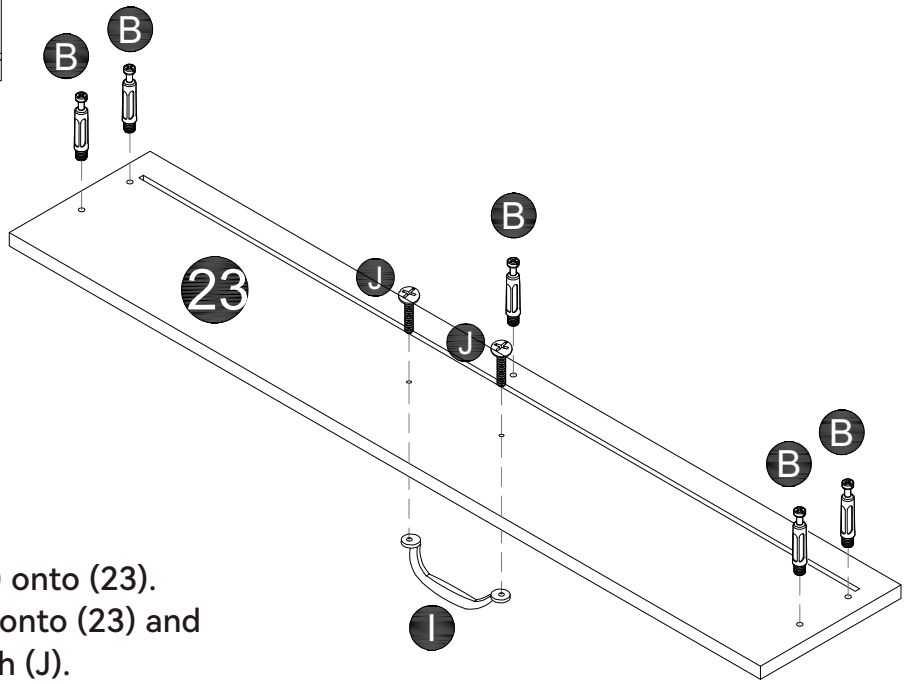

B x 15

I x 3

J x 6
M4*16

X3

1.Install (B) onto (23).
2.Install (I) onto (23) and tighten with (J).

Step 35

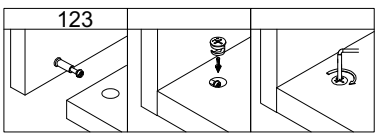

C x 15

X3

Install (23) onto (24)(25)(28) and tighten with (C).

Assembly Instructions

Step 36

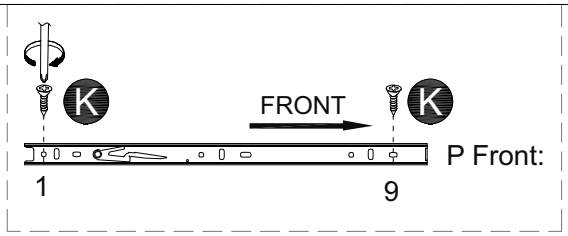

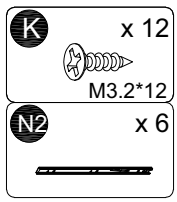

1.Install (N-2) onto (24) and tighten with (K).
2.Install (N-2) onto (25) and tighten with (K).

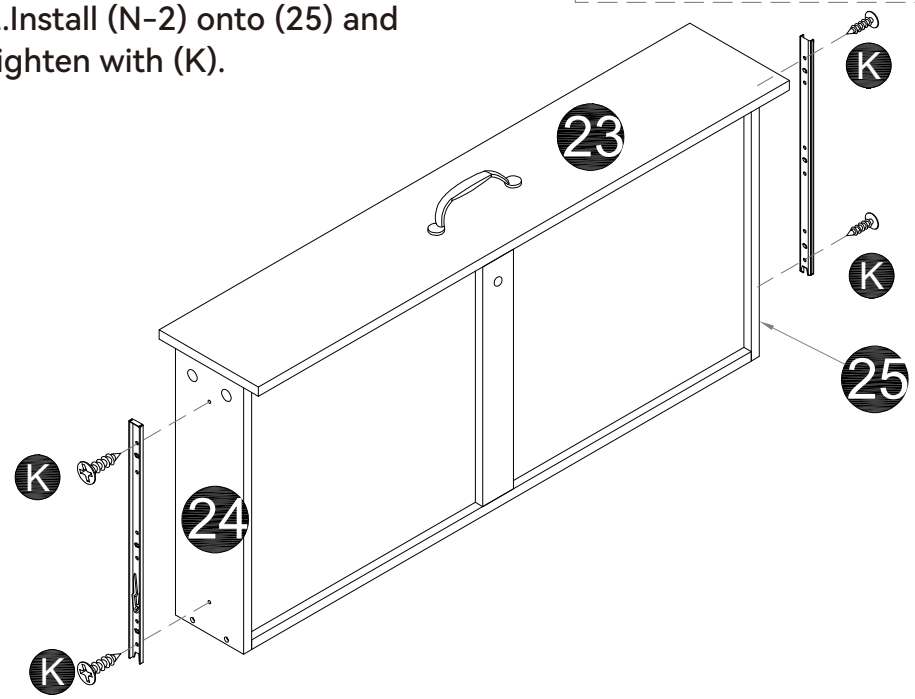

X3

Step 37

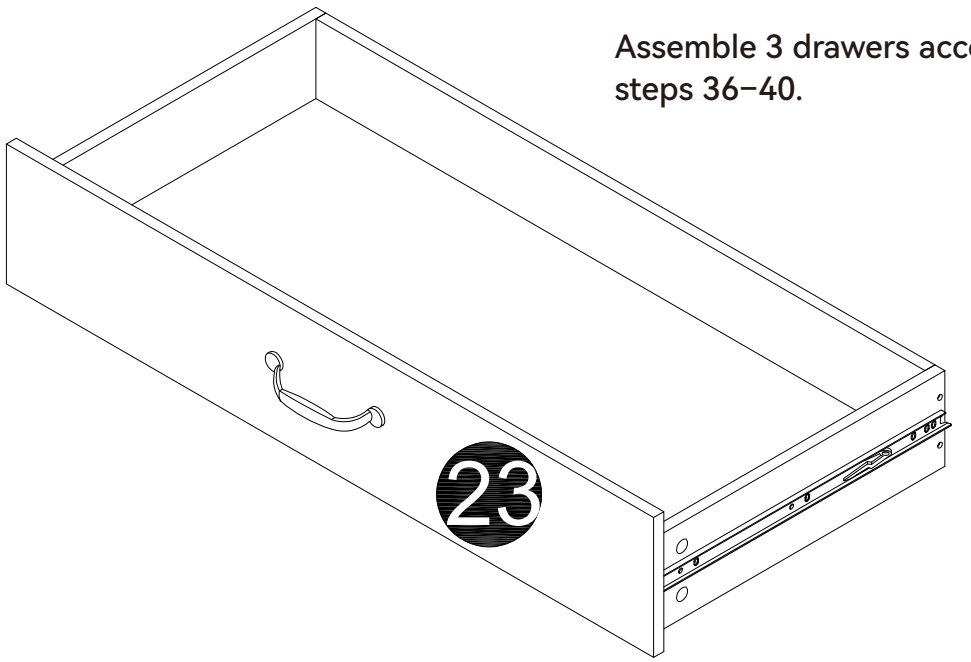

Assemble 3 drawers according to steps 36–40.

X3

Assembly Instructions

Step 38

1.Pre-check: Ensure the rails are secure and ball bearings in place.
2.Preparation: Slide the ball bearings to the front of the rail before closing.

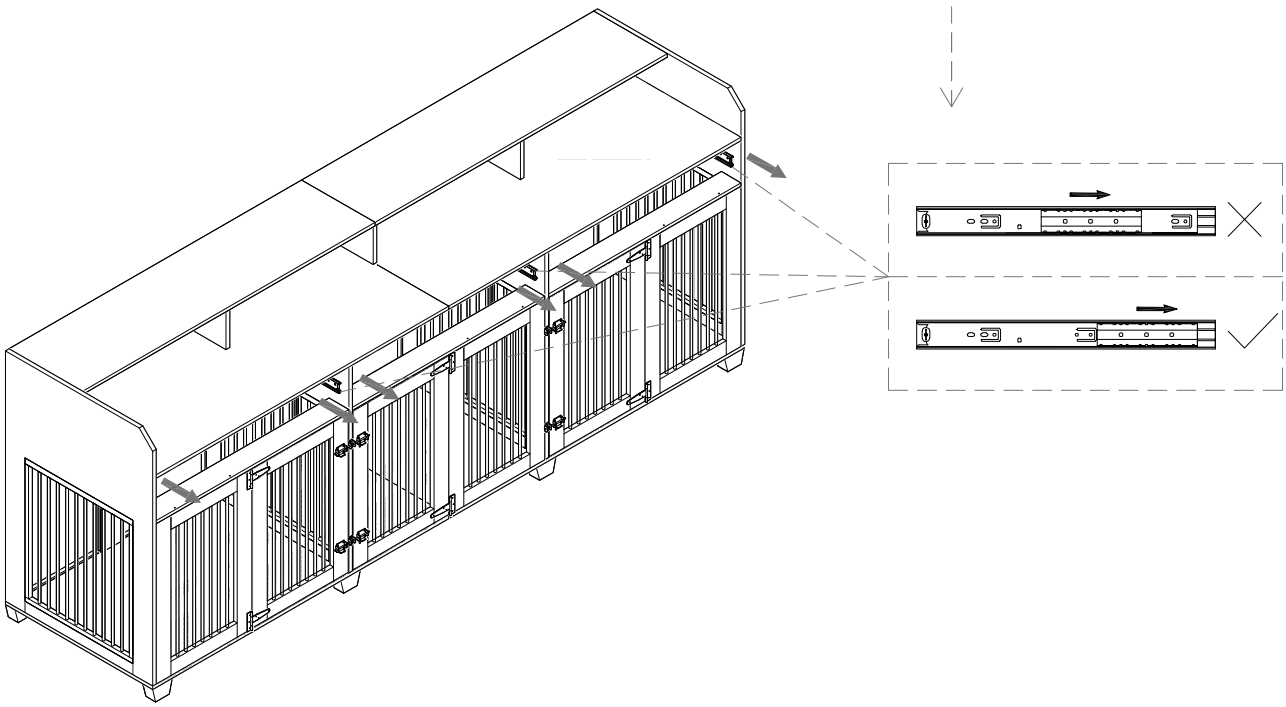

3.Align and insert: Align the drawer rail with the main slide and insert both sides simultaneously.

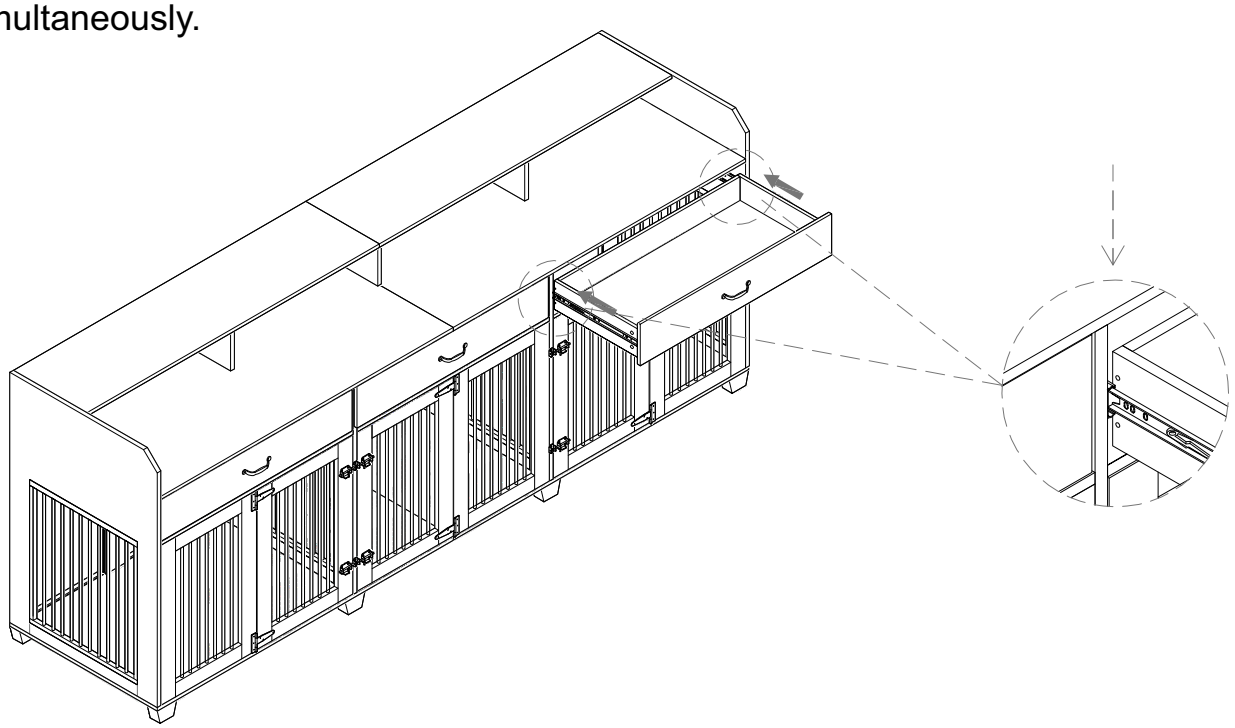

4.Gently open and close the drawer three times to align and seat the ball bearings.

Assembly Instructions

Step 39

5. Removing the drawer:

Fully extend the drawer.
Push up the left release latch and push down the right release latch. Pull out the drawer while supported.

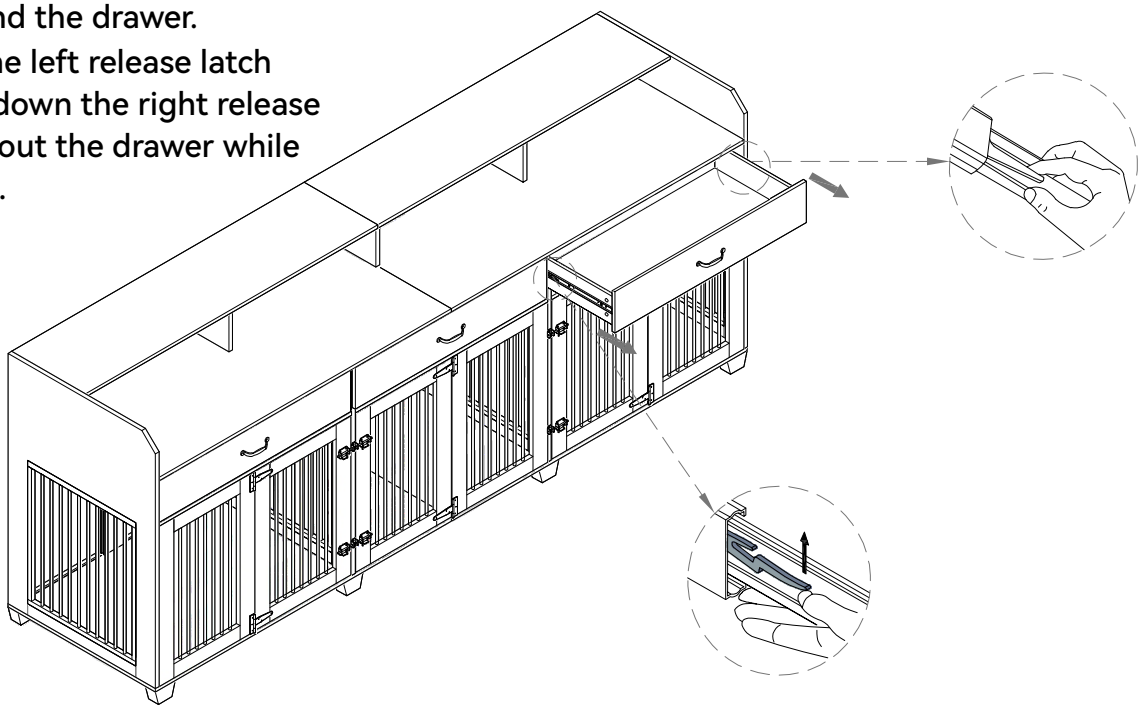

*** If the drawer does not slide in smoothly, remove it and repeat the steps.**

Step 40

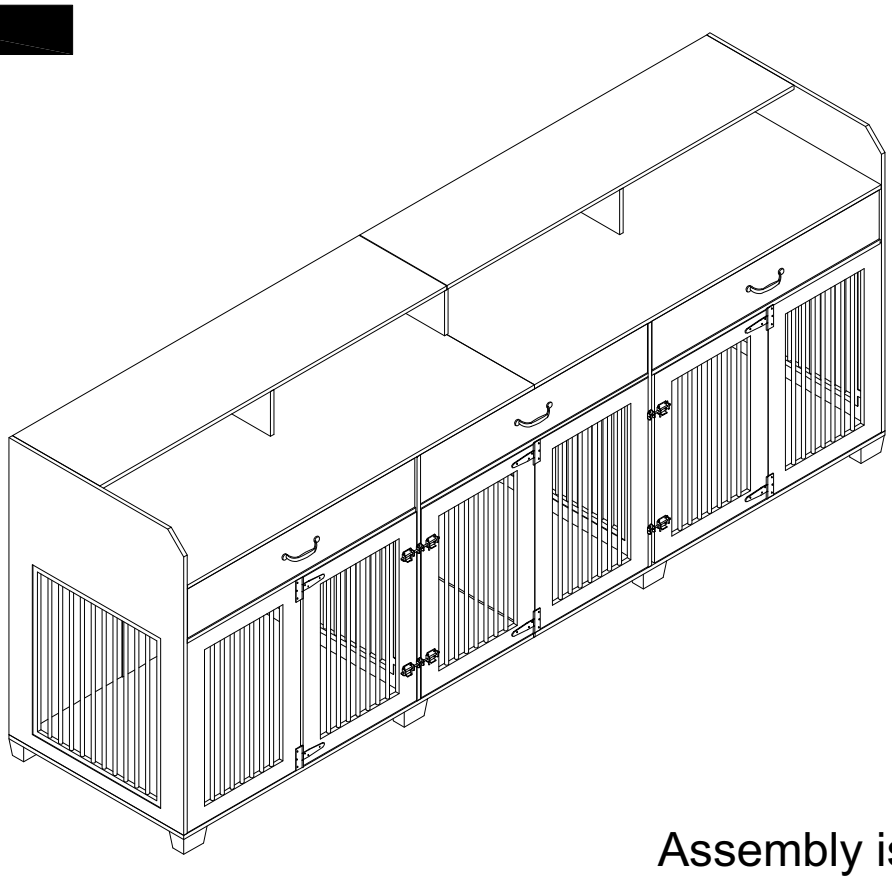

Assembly is complete.