Assembly Instructions

Important Safety Notice: Please read carefully before assembly!

- Please read all instructions before assembly.
- Use all parts and hardware as indicated. Do not tighten any screws until the assembly is completely completed.
- Keep small parts out of reach of children. Please store all parts in a plastic bag. If any parts are missing or damaged, please contact our customer service department immediately.
- Before assembly, please carefully check that the product is complete and undamaged. Our company is not responsible for any legal liability.

Attention: This product is intended for indoor use only. It is not suitable for outdoor use.
Attention: Any damage caused by improper use or installation is not covered by the warranty.

■ Component List:

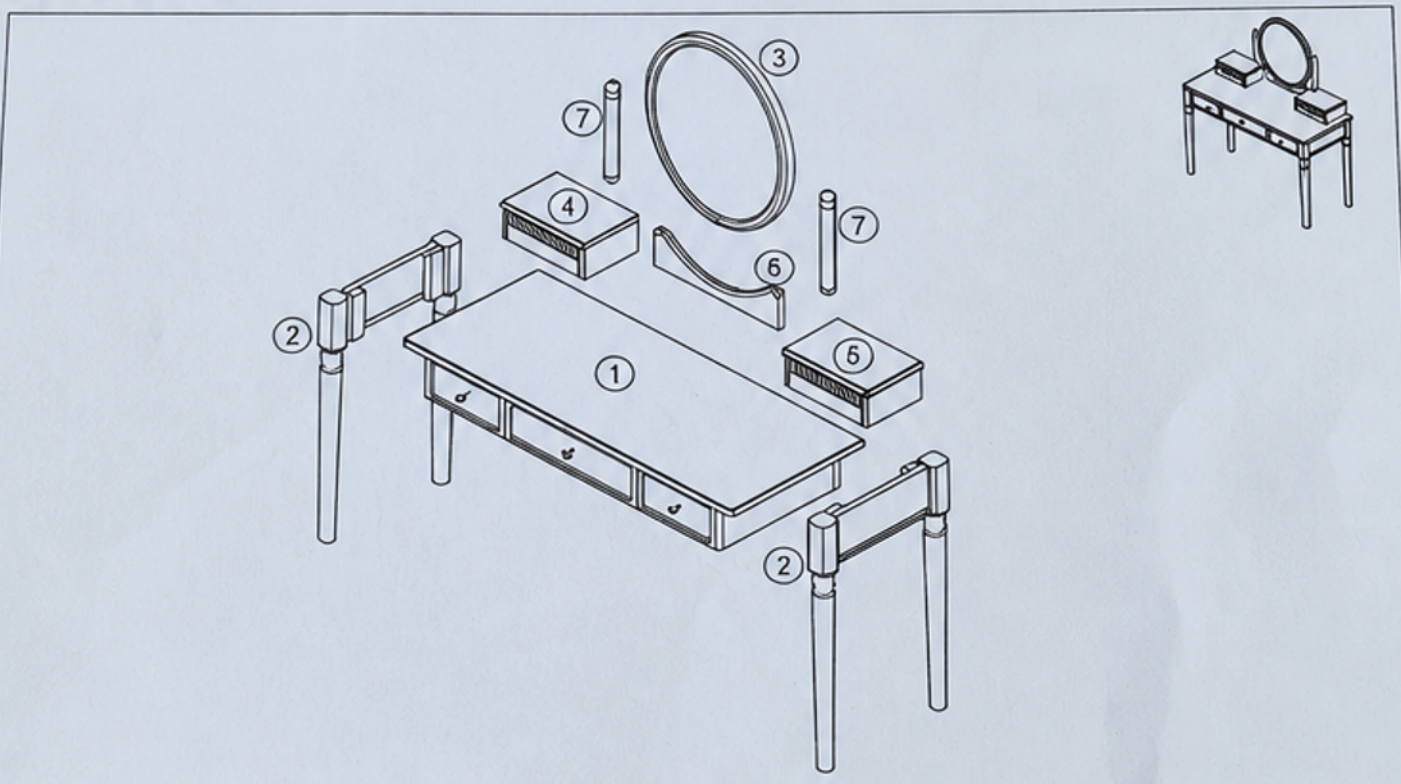

① Tabletop × 1	② Side Frame × 2	③ Mirror × 1	④ Left Drawer × 1	⑤ Right Drawer × 1	⑥ Support × 1	⑦ Mirror Post × 2

■ Hardware List:

					
A. Allen Bolt M5 × 1	B. Allen Bolt M6 × 10	C. Spring Washer ϕ6 × 12	D. Flat Washer ϕ6 × 10	E. Wooden Dowel ϕ10 × 40 × 2	F. Allen Bolt M8 × 20 × 2
					
G. Flat Washer ϕ8 × 16 × 2	H. Lock Washer M8 × 2	I. Connector × 2	J. Allen Bolt M6 × 15 × 4	K. Allen Bolt M4 × 1	L. Allen Bolt M8 × 1

FURNITURE ASSEMBLY

Coffee Table

Assembly steps:

(1) Refer to the drawing below. Take the top panel ①, the front panel ④, the left side panel ⑤, the right side panel ⑥, the back panel ③, and connect them together. Then install the drawers and drawer front.

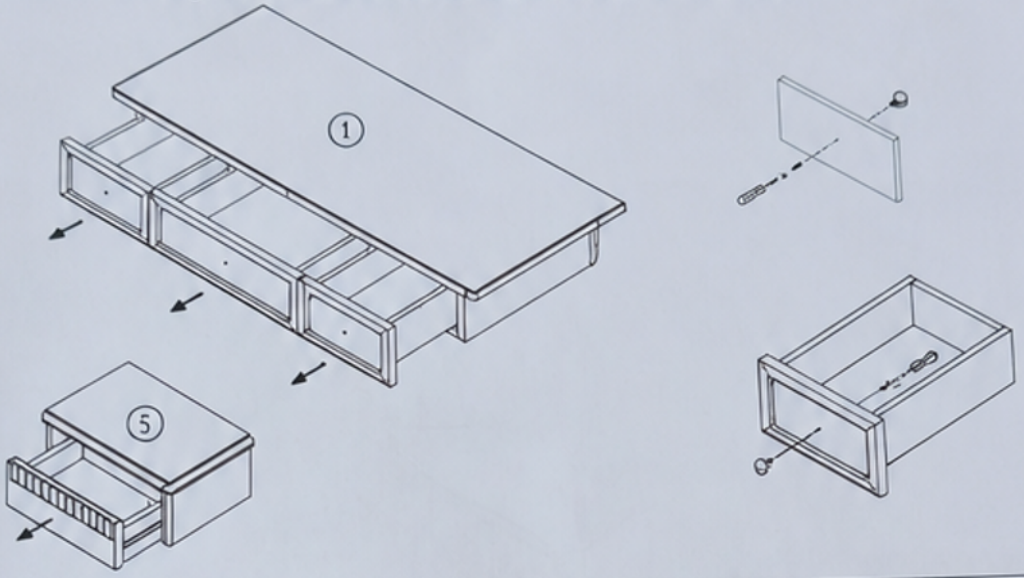

(2) Refer to the drawing below to install the tabletop and legs:

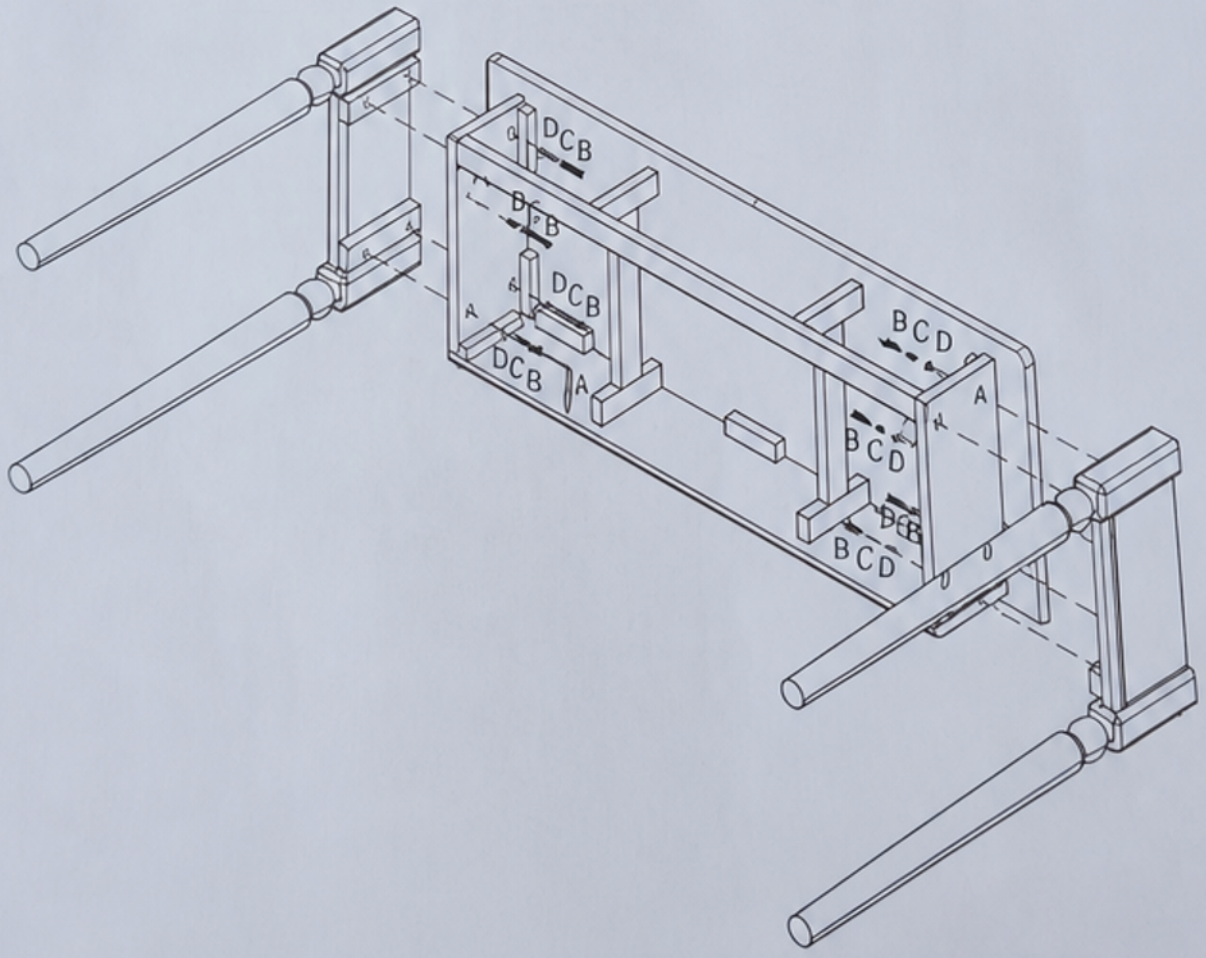

Step 3: Refer to the diagram below to assemble parts ③, ④, ⑤, ⑥, and ⑦.

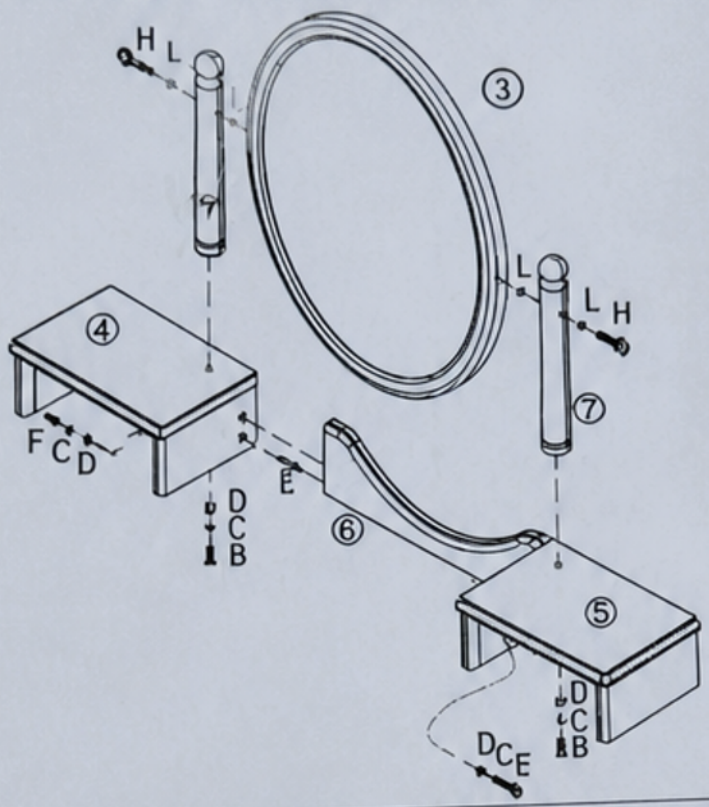

Step 4: Refer to the diagram below to assemble the parts in the following steps;

the final assembled product is shown.

