Bed Frame Installation Manual

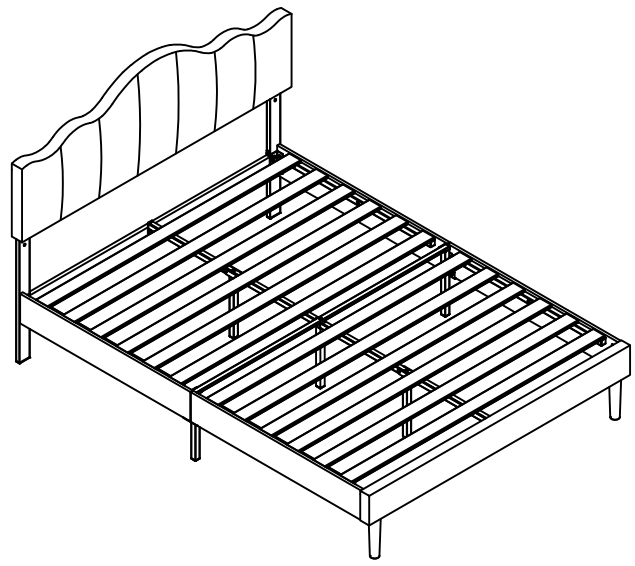

Team Assembly Recommended

Componets

1a 1pcs	2 1pcs	3 2pcs
4 2pcs	5a 1pcs	6 1pcs
7 2pcs	8 2pcs	9a 1pcs
10a 1pcs	11a 1pcs	12 1pcs

Screws &Tools

A M8×45 5pcs	B M8 4pcs	C M8×18 4pcs	D 1pcs

Check all the components & screws before assembly.

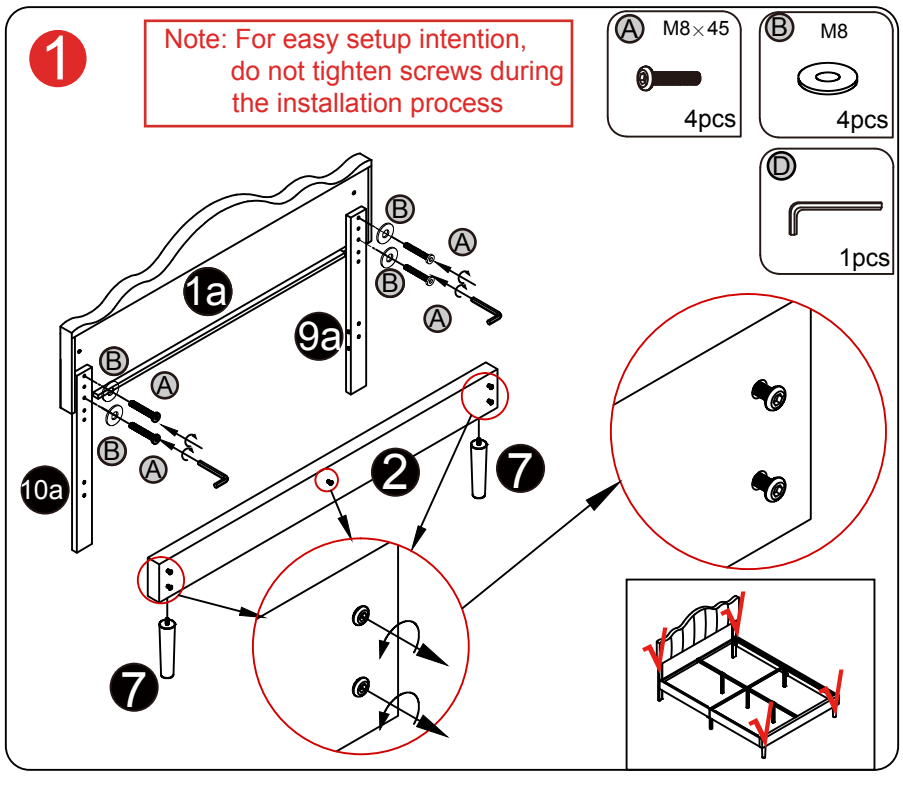

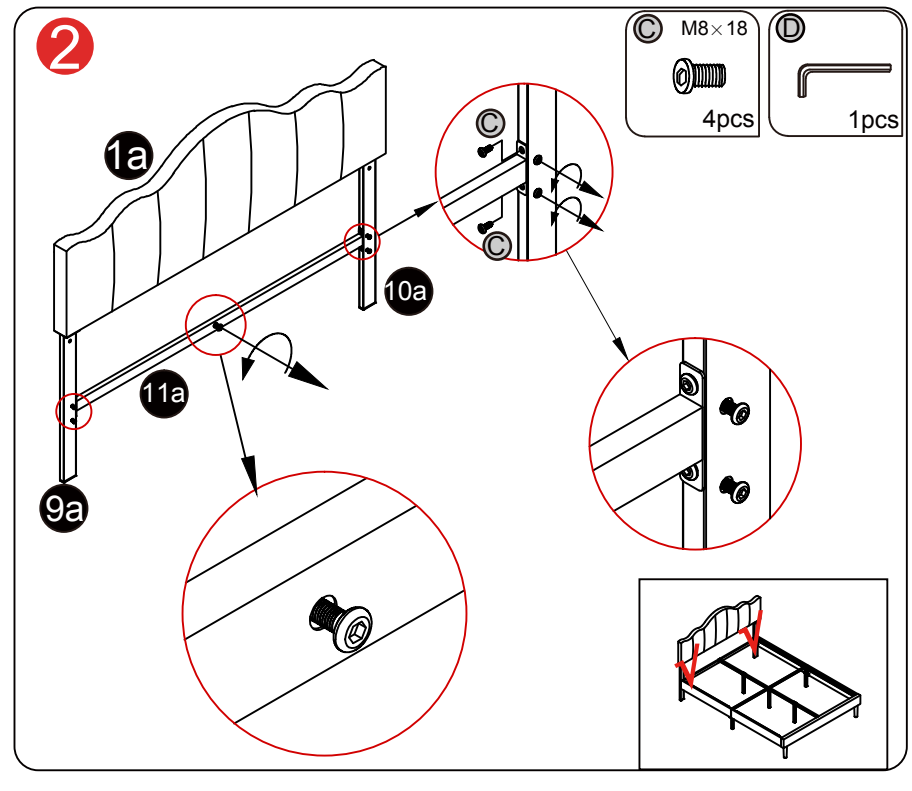

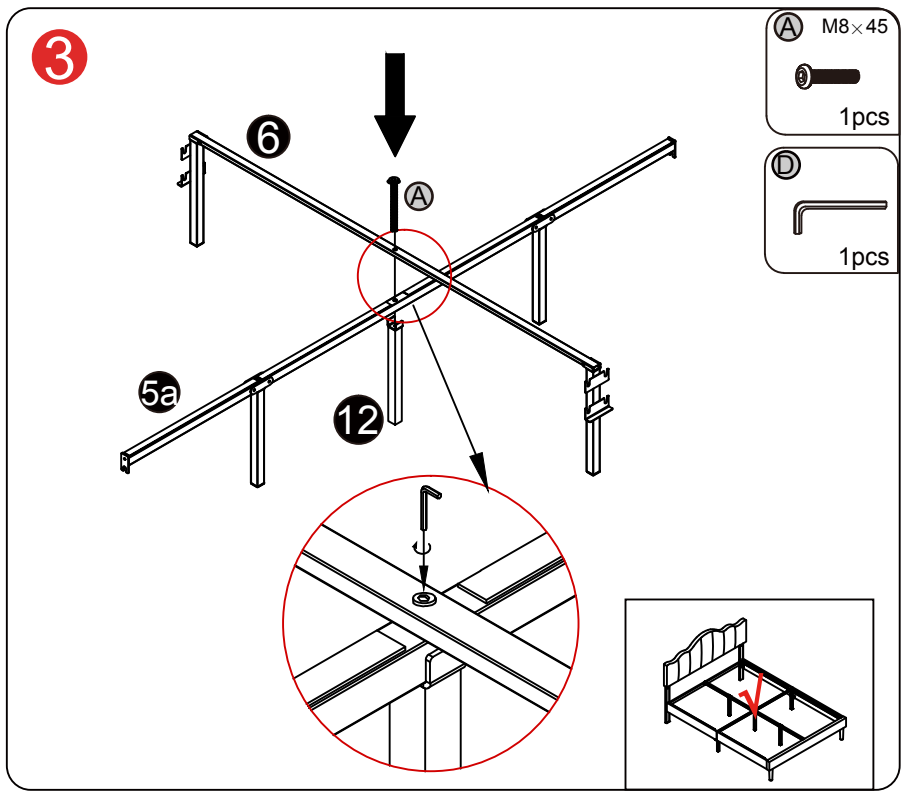
3
Ⓐ M8×45
1pcs
Ⓓ
1pcs
6
Ⓐ
5a
12

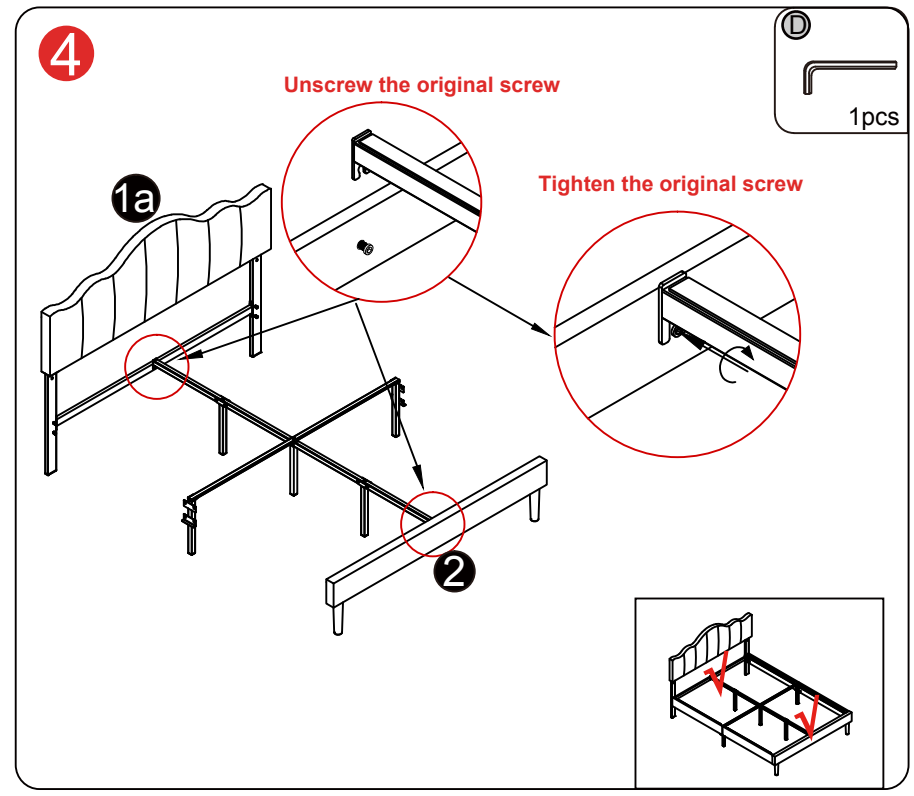
4
Ⓓ
1pcs
Unscrew the original screw
Tighten the original screw
1a
2

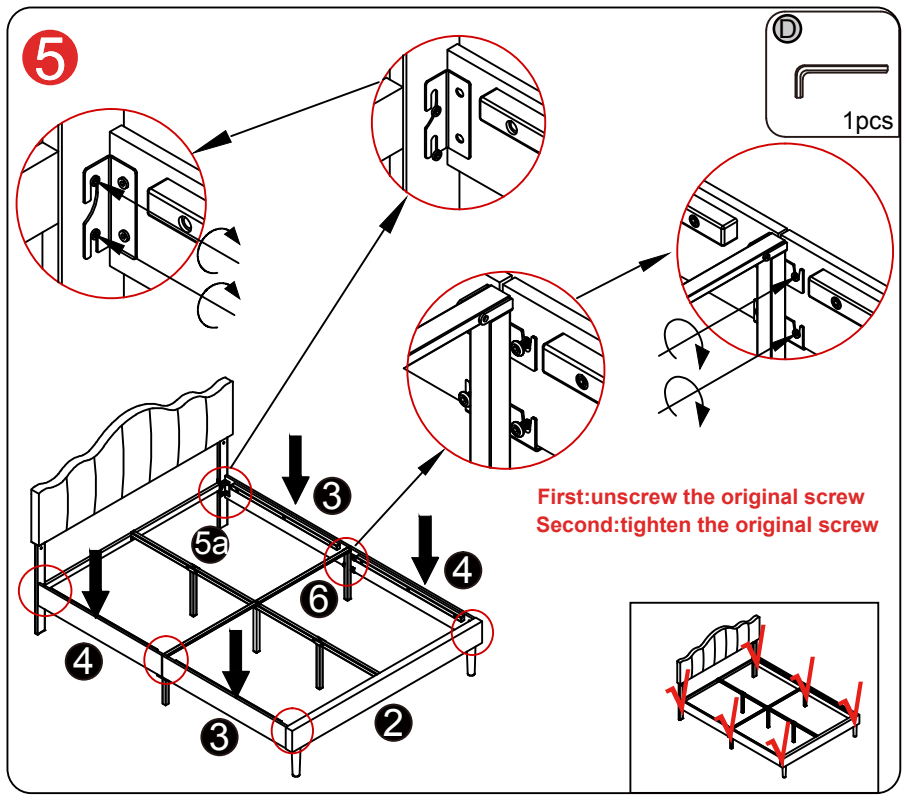
5
Ⓓ
1pcs
First:unscrew the original screw
Second:tighten the original screw
3
4
5a
6
4
3
2

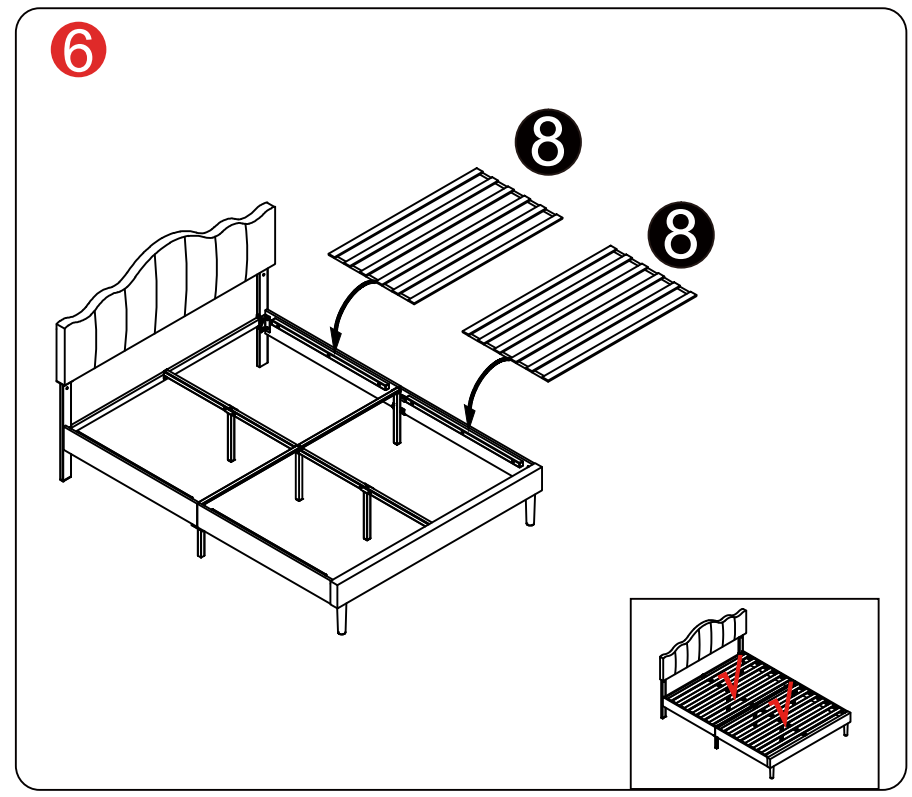
6
8
8

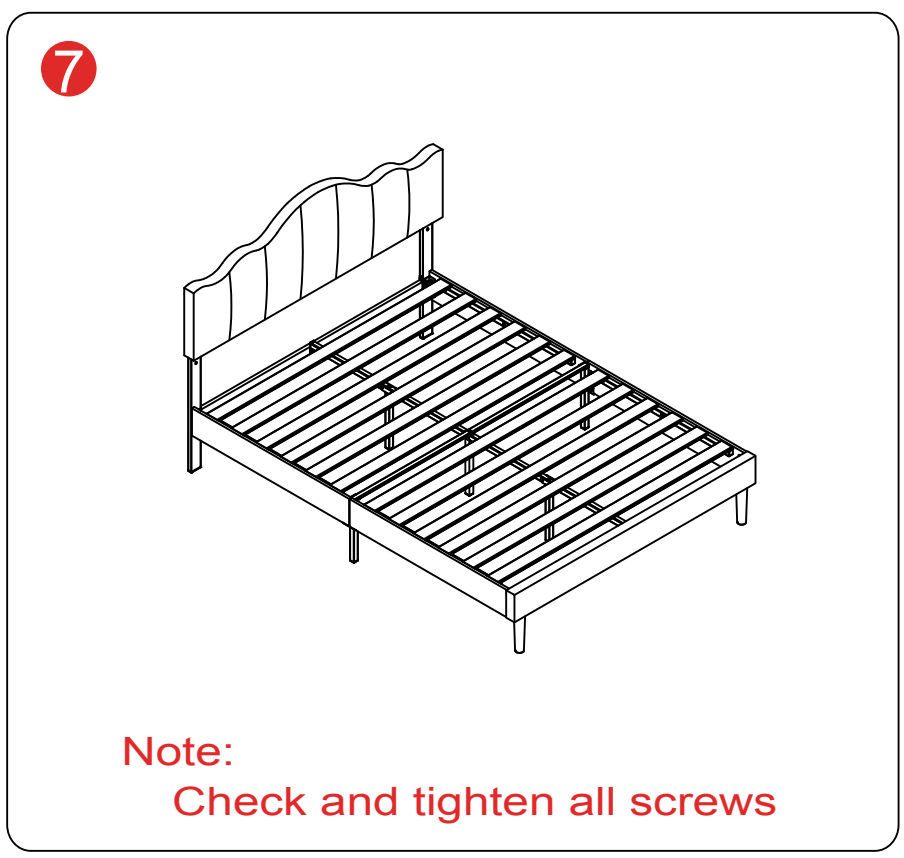
7
Note:
Check and tighten all screws