ASSEMBLY INSTRUCTION FOR

CHIARA SINGLE WIDE VANITY

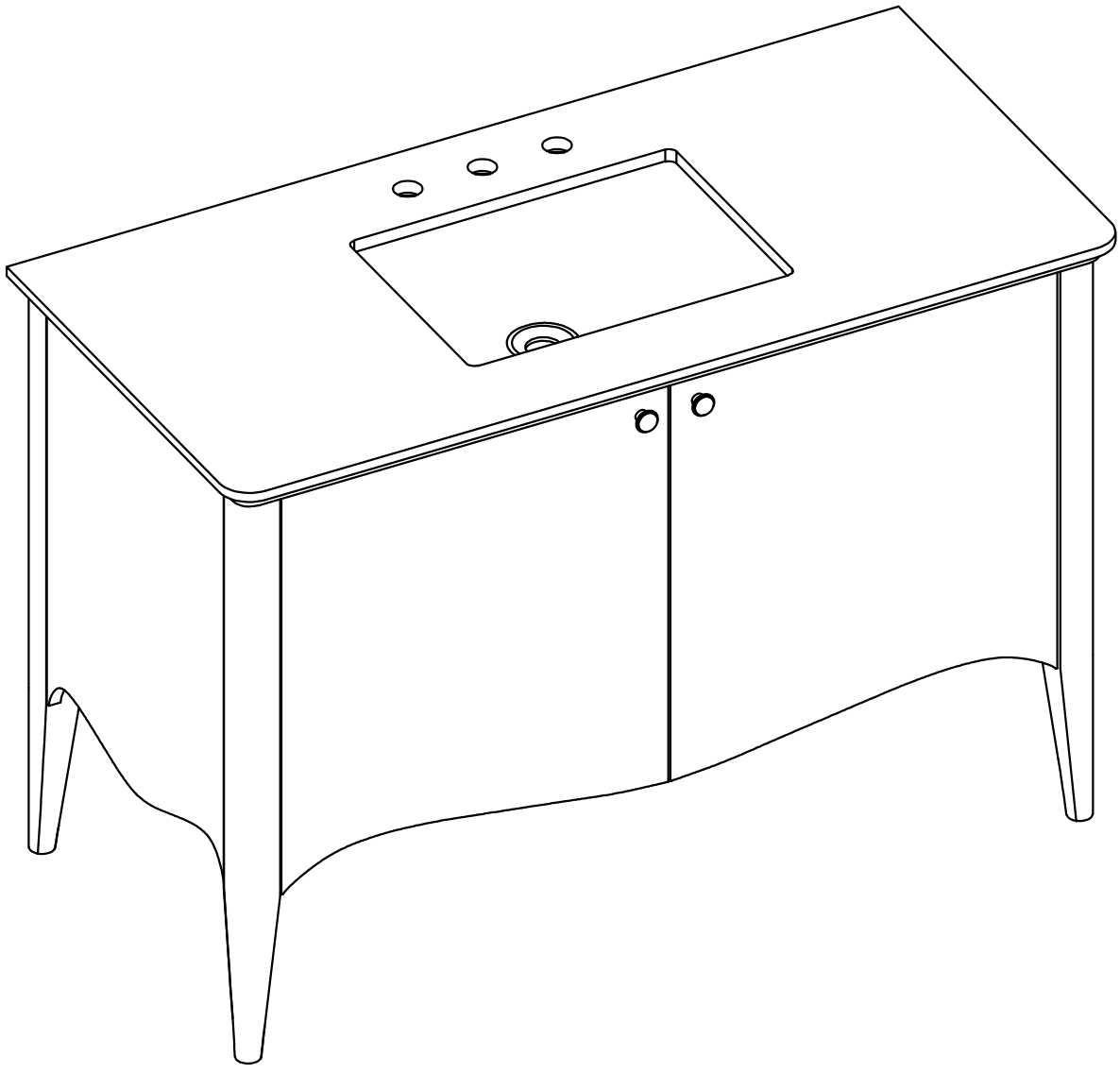

Made in Vietnam

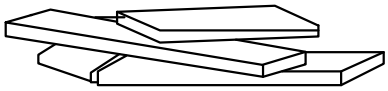

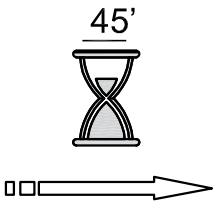

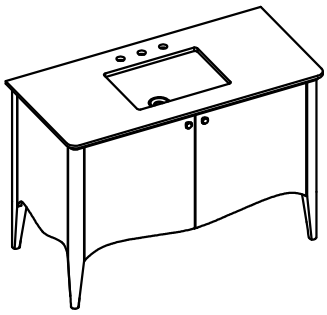

PROFESSIONAL INSTALLATION REQUIRED - CONTRACTOR AND PLUMBER needed for installation

- Please read all instructions carefully before assembling.
- For your safety, assembly by two or more adults is strongly recommended.
- Keep instructions for future use.
- Use only vendor supplied hardware to assemble. Using unauthorized hardware could jeopardize the structural integrity of the item.
- The Vanity Base must be secured to the wall. Wall attachment hardware is not included. For safe mounting it is essential to use the proper hardware for your wall type. If walls are drywall or wood stud, concrete, brick or plaster, please consult your local hardware store for assistance in selecting the appropriate hardware.

- **Note:** Consoles usually need to be leveled and mounted to both wall and floor. Some hardware items needed for proper assembly and installation are not included: ex. shim, spacer, high quality silicone or acrylic based bath sealant, etc.

DO NOT USE PLUMBERS PUTTY OR ANY OIL BASED SEALANT AS THIS WILL STAIN THE MARBLE.

Note: Some cutting of the baseboard, and drilling may be necessary to mount console base to wall.

PRE-ASSEMBLY:

- Remove all parts and hardware from the box and lay out on a clear carpeted or scratch-free work surface, as this will avoid damaging parts during assembly. The shipping box provides an ideal work surface.
- Do not dispose of any packaging or contents of the shipping carton until assembly is completed to avoid accidentally discarding small parts or hardware.
- Use the parts and hardware lists below to identify and separate each of the pieces included.
- The illustrations provided allow for easier assembly when used in conjunction with the assembly instructions. The use of power tools to aid in assembly is not recommended. Power tools can damage hardware and split wood.
- Keep all parts out of the reach of children.
- A standard 8" spread faucet should be used with this Marble top console.

Note: Consoles usually need to be leveled and mounted to both wall and floor. Some hardware items needed for proper assembly and installation are not included: ex. shim, spacer, high quality silicone or acrylic based bath sealant, etc.

DO NOT USE PLUMBERS PUTTY OR ANY OIL BASED SEALANT AS THIS WILL STAIN THE MARBLE.

Note: Some cutting of the baseboard, and drilling may be necessary to mount console base to wall

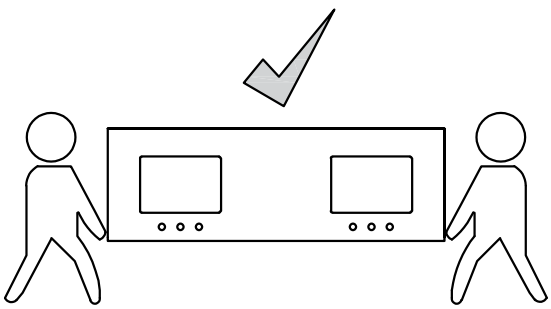

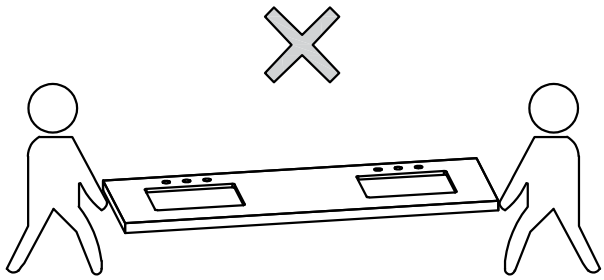

Box 1

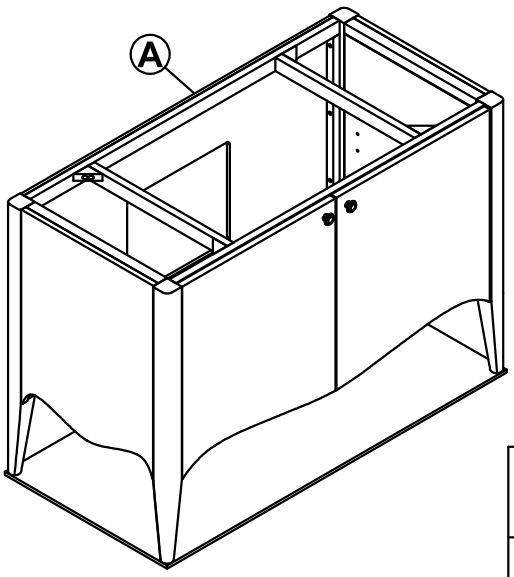

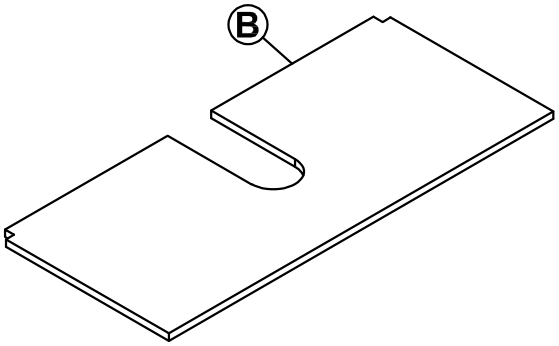

E	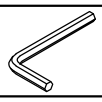	Allen key	4mm	1
F		Leveler	M6	4
G		shelf support		4
H		Screw	3.5x15mm	4

Basin box

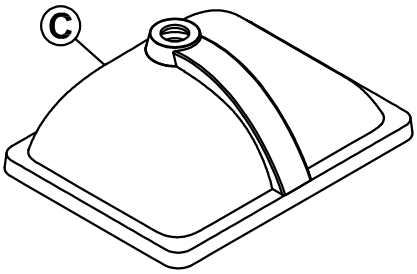

I		Threaded rod	M6x30	4
J	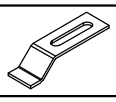	Bracket		4
K		Wing nut	M6	4

Box 2

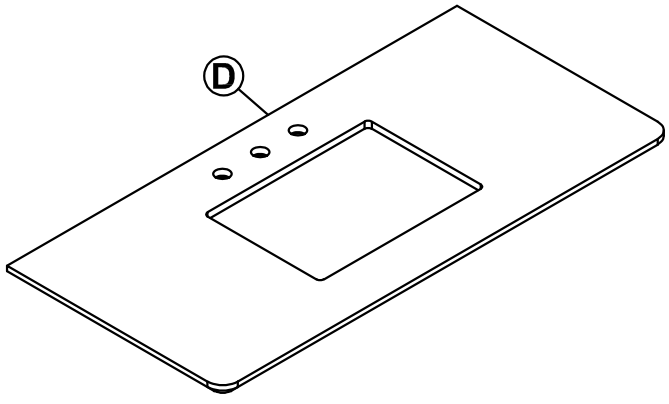

Made in Vietnam

Step 1

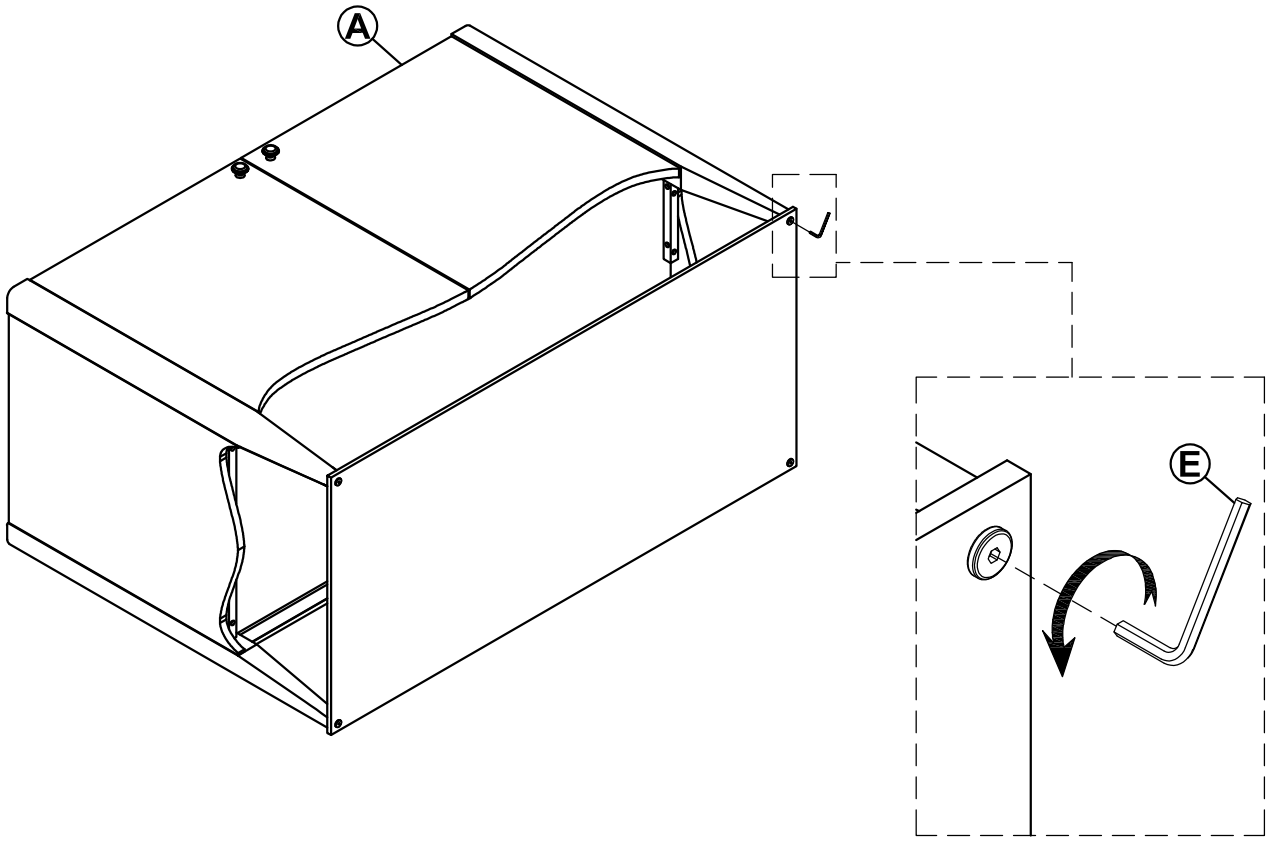

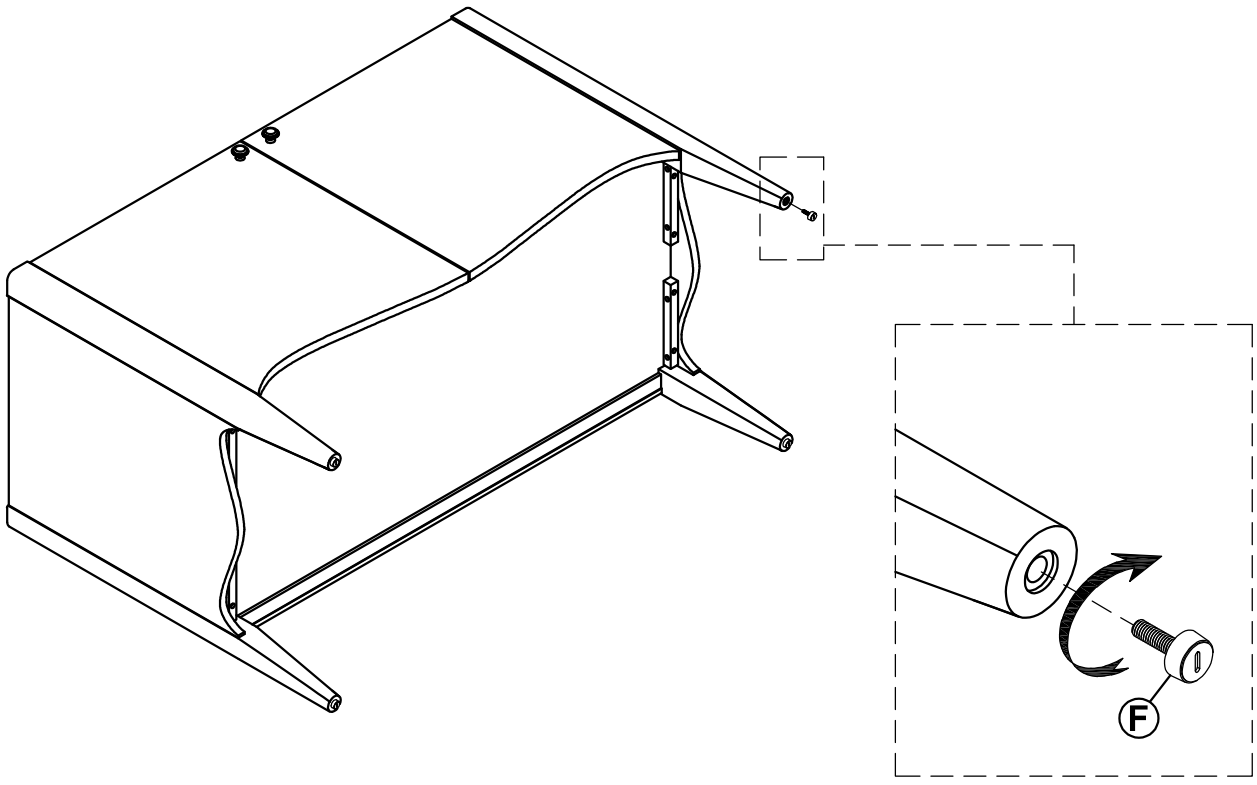

Made in Vietnam

Step 2

*** Shelf assembly**

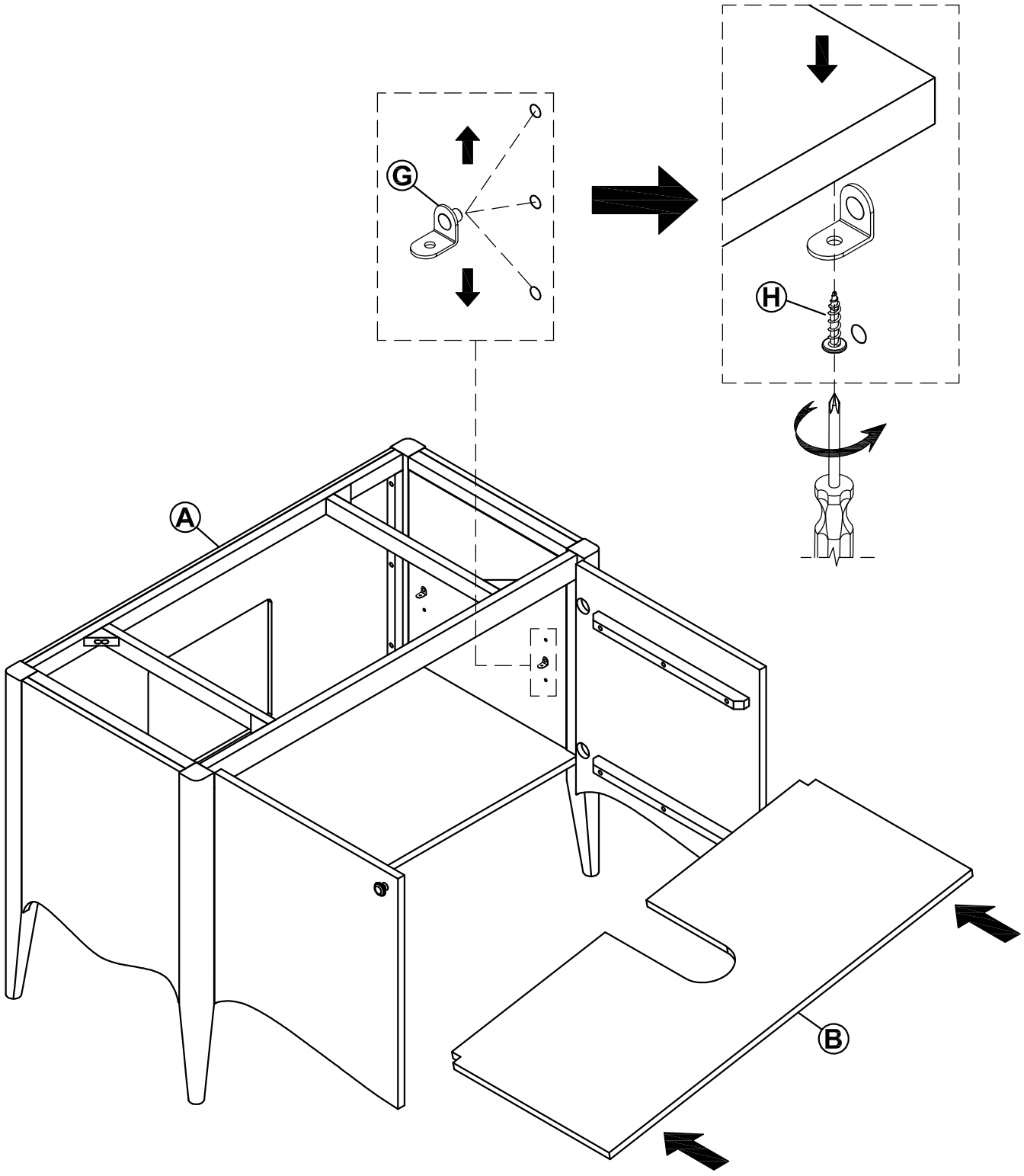

*** IN ORDER TO REPOSITION SHELF PLEASE FOLLOW *STEP 2* IN REVERSE ORDER.**

Step 3

THE VANITY MUST BE SECURED TO THE WALL.

NOTE: For safe mounting it is essential to use the proper hardware for your wall type. The hardware is not included, please consult your local hardware store for assistance in selecting the appropriate hardware. Mount to wood studs whenever possible.

Measure the location of the plumbing locations in the wall. Mark the back panel of the case correspondingthe location of the plumbing. Cut holes in the back panel for the plumbing to pass through.

Move the BASE to the desired placement against the wall. Use a sharp pencil or a screw to mark the wall through the holes on top rail.

NOTE: New holes can be drilled in the top back rail of the vanity to properly align with the wood studs.

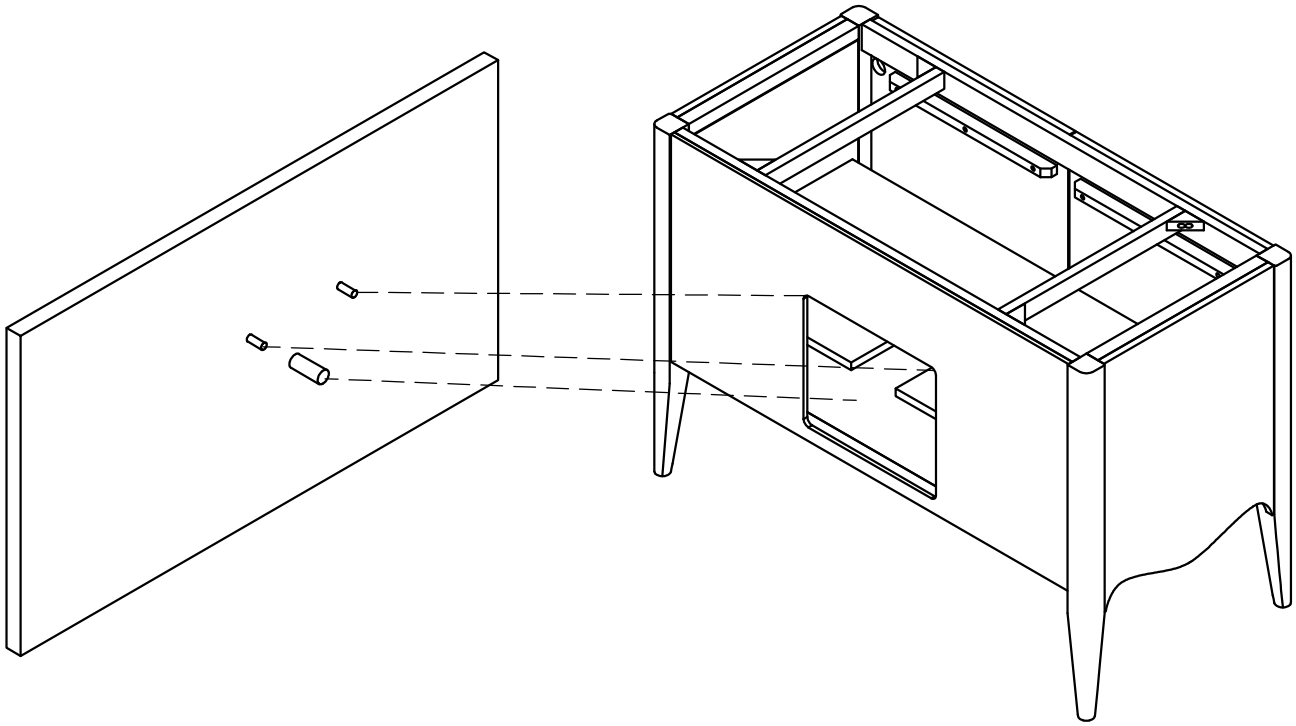

Step 4

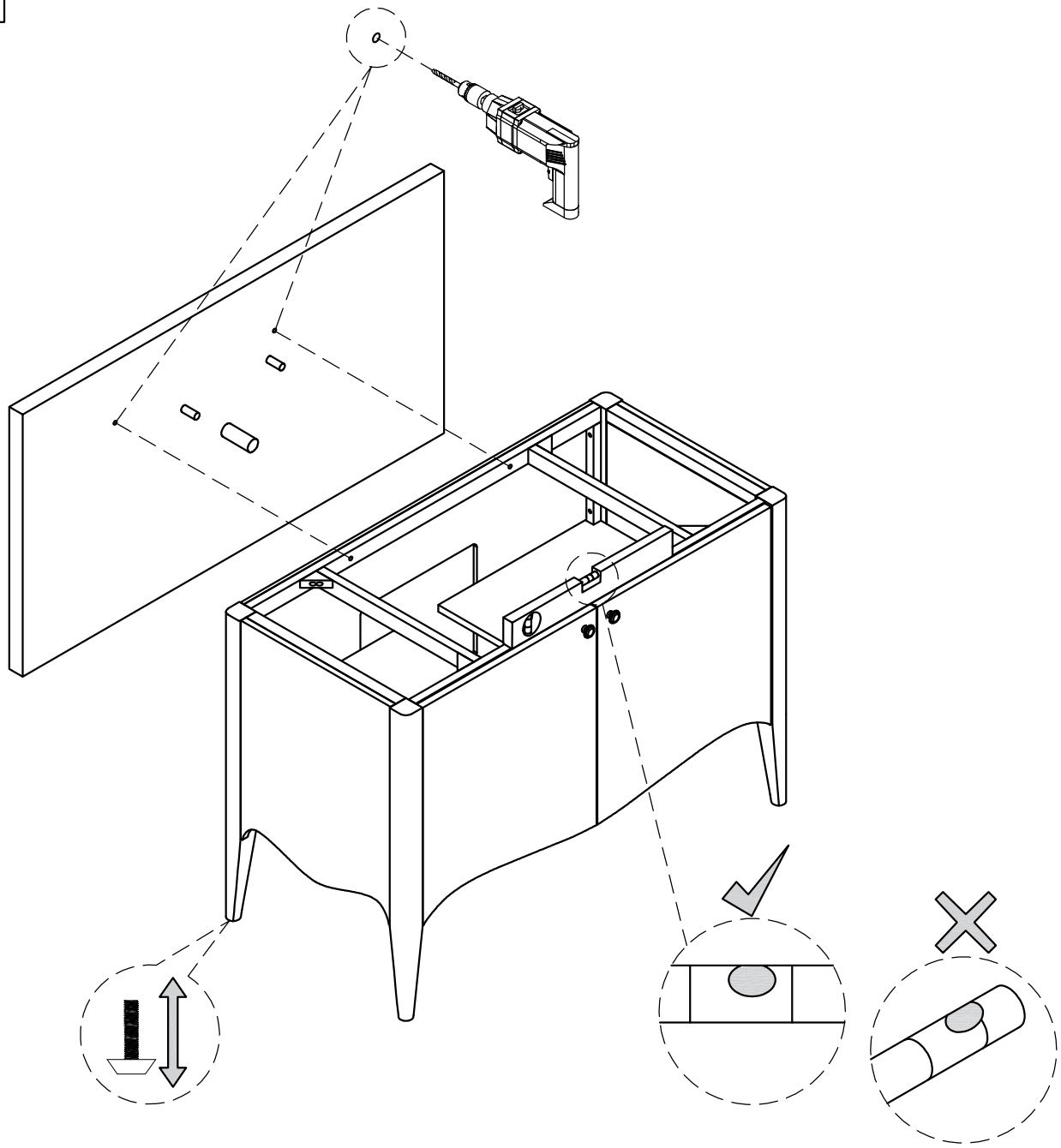

Adjusting floor levelers and door hinges

Your furniture has been expertly crafted and re-adjusted by professionals. However, slight shifts can occur during transportation. If you notice that the doors are not perfectly aligned or the furniture wobbles, a quick adjustment can help ensure stability and a seamless look.

Adjusting Floor Levelers

Check for stability - Place the furniture in its final position on a level surface. If it wobbles or doesn't sit evenly, the floor levelers need adjusting.
Locate the levelers - These are small adjustable feet found at the bottom corners of your furniture.
Adjust as needed - Using your hand or a wrench, turn the levelers clockwise to raise or counterclockwise to lower the furniture. Make small adjustments and check stability after each turn.

If you need further adjustments, repeat the process in small increments.

Step 5

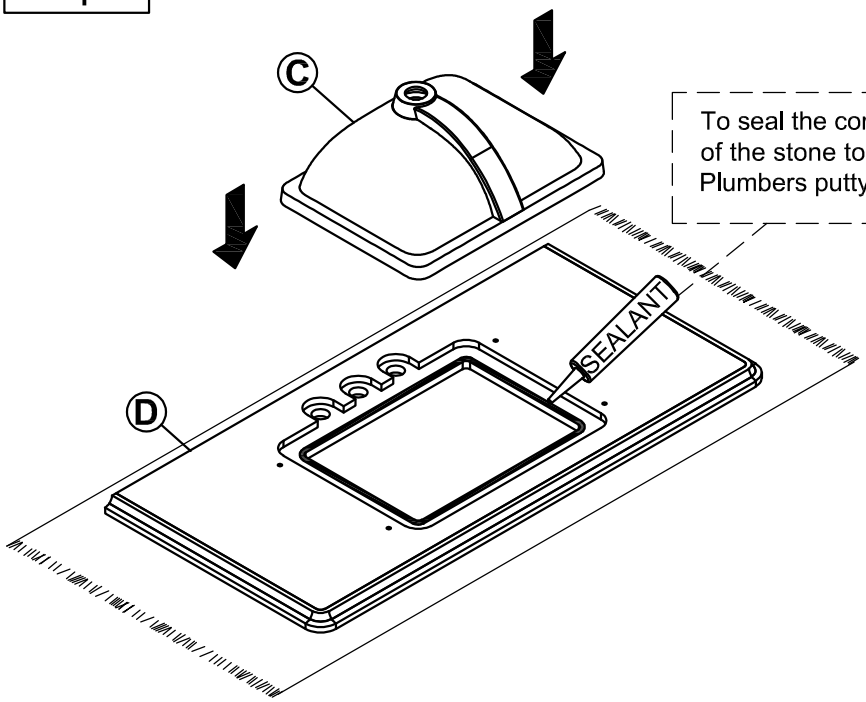

To seal the connection between the basin edge and the bottom of the stone top caulking must be Silicon or Acrylic based. Plumbers putty must not be used as it will stain the stone top.

Step 6

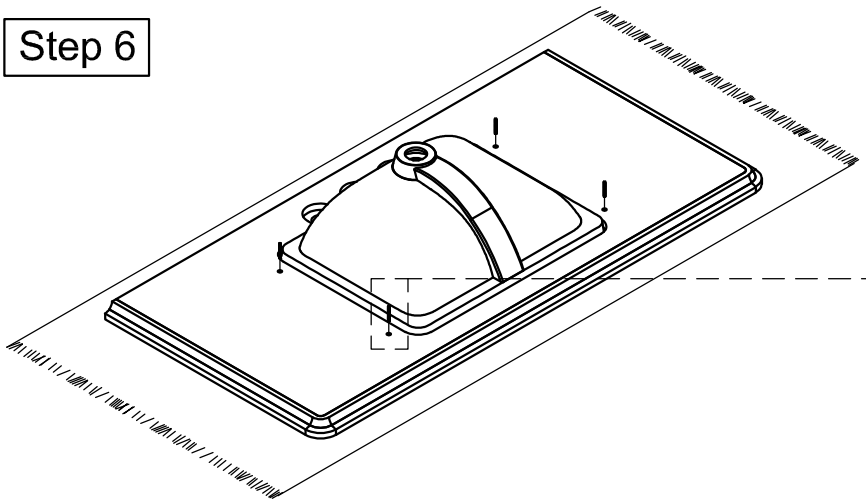

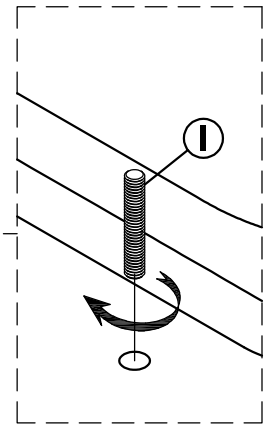

Step 7

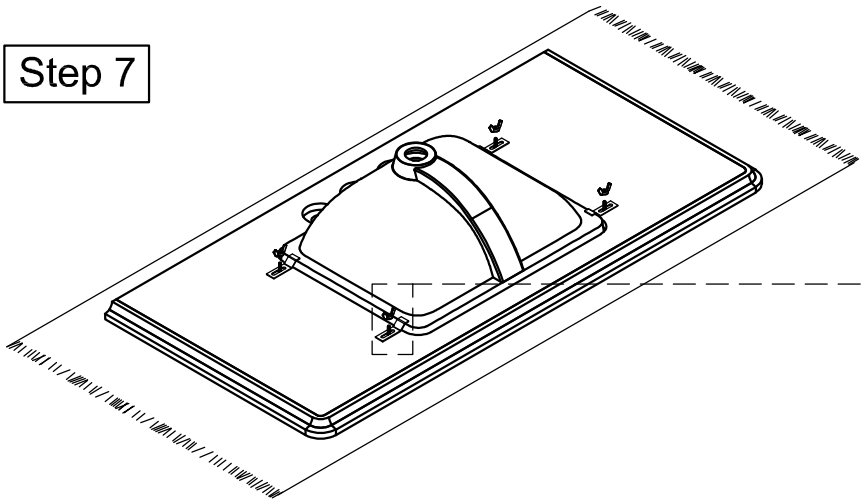

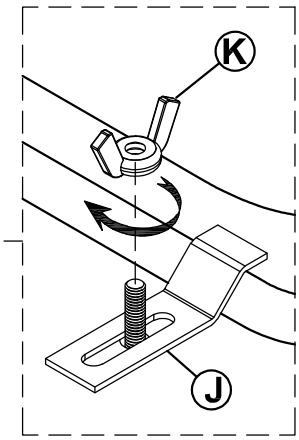

Made in Vietnam

Step 8

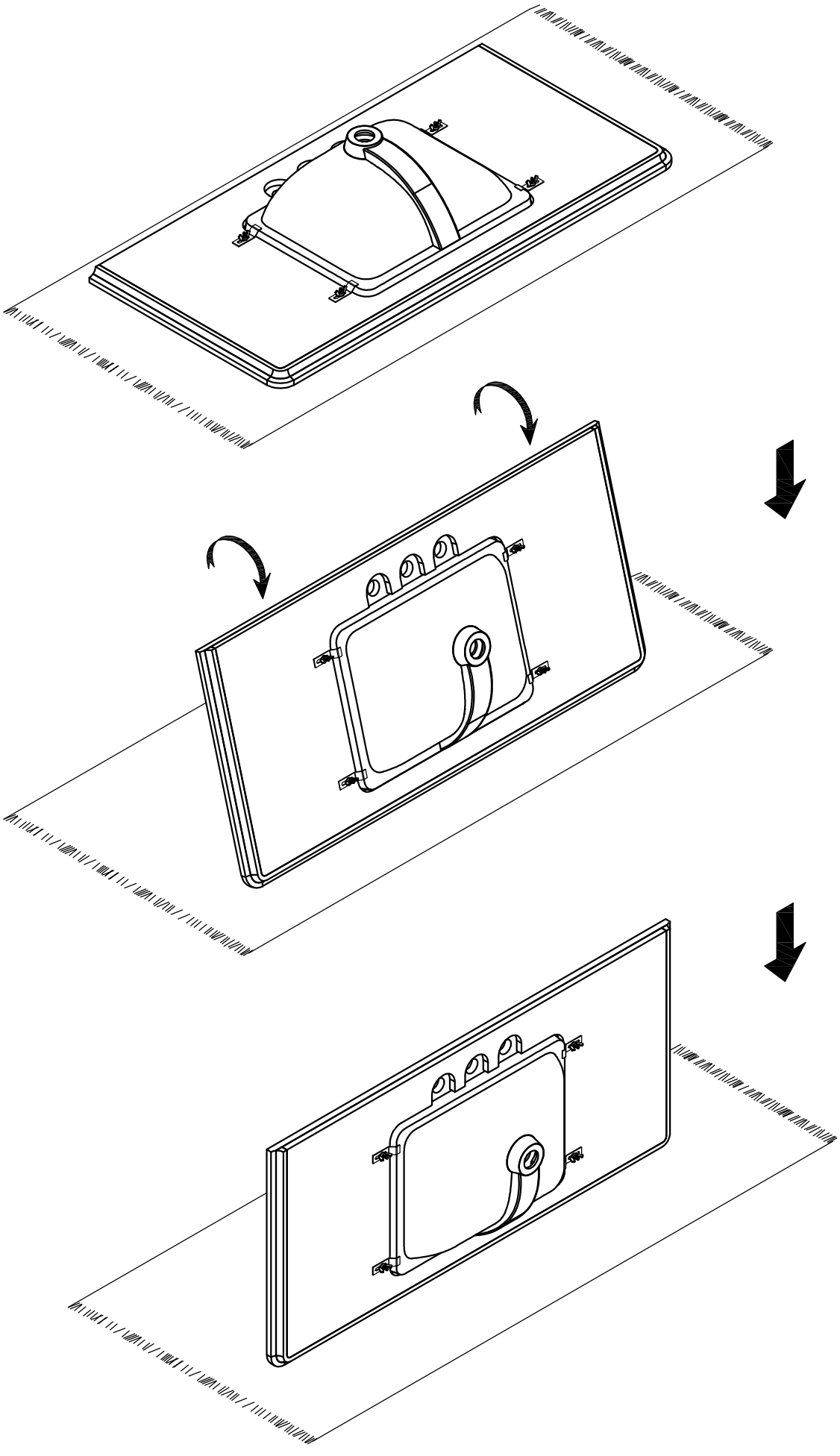

Made in Vietnam

Step 9

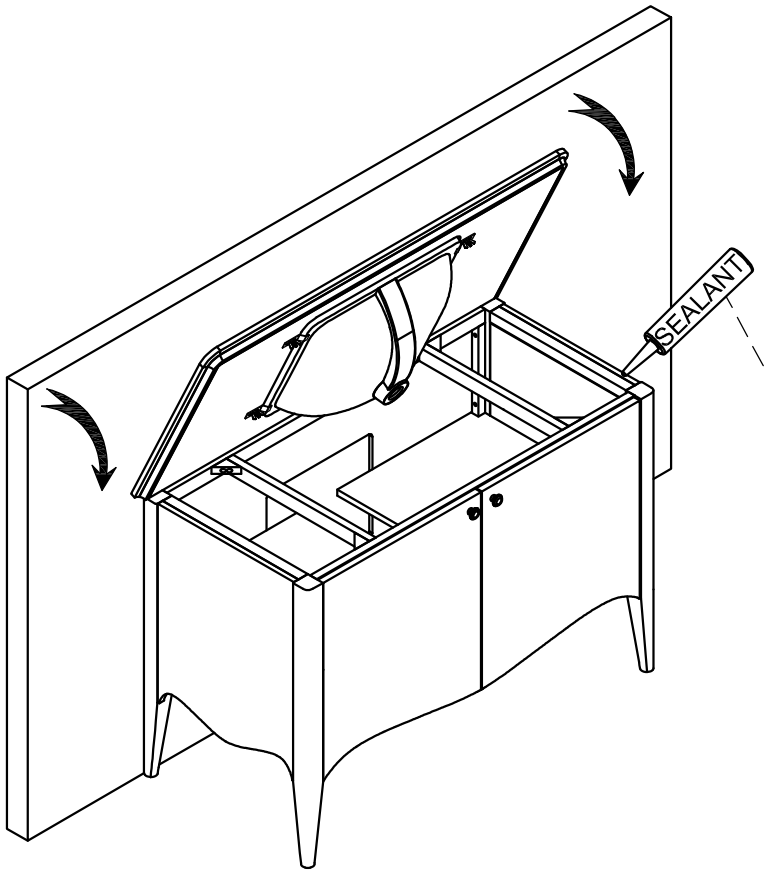

Slow

To seal the connection between the basin edge and the bottom of the stone top caulking must be Silicon or Acrylic based. Plumbers putty must not be used as it will stain the stone top.

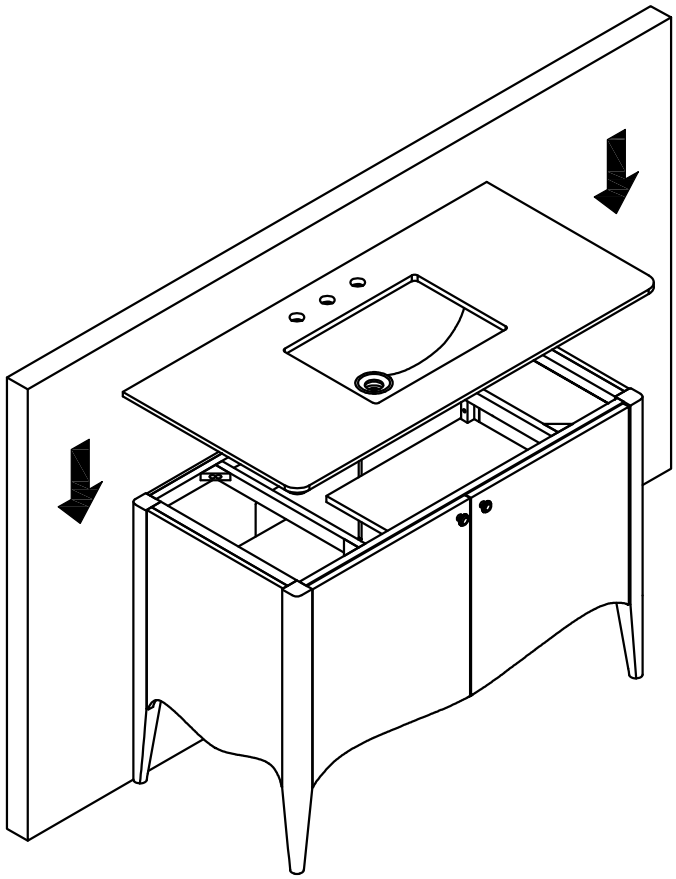

Step 10

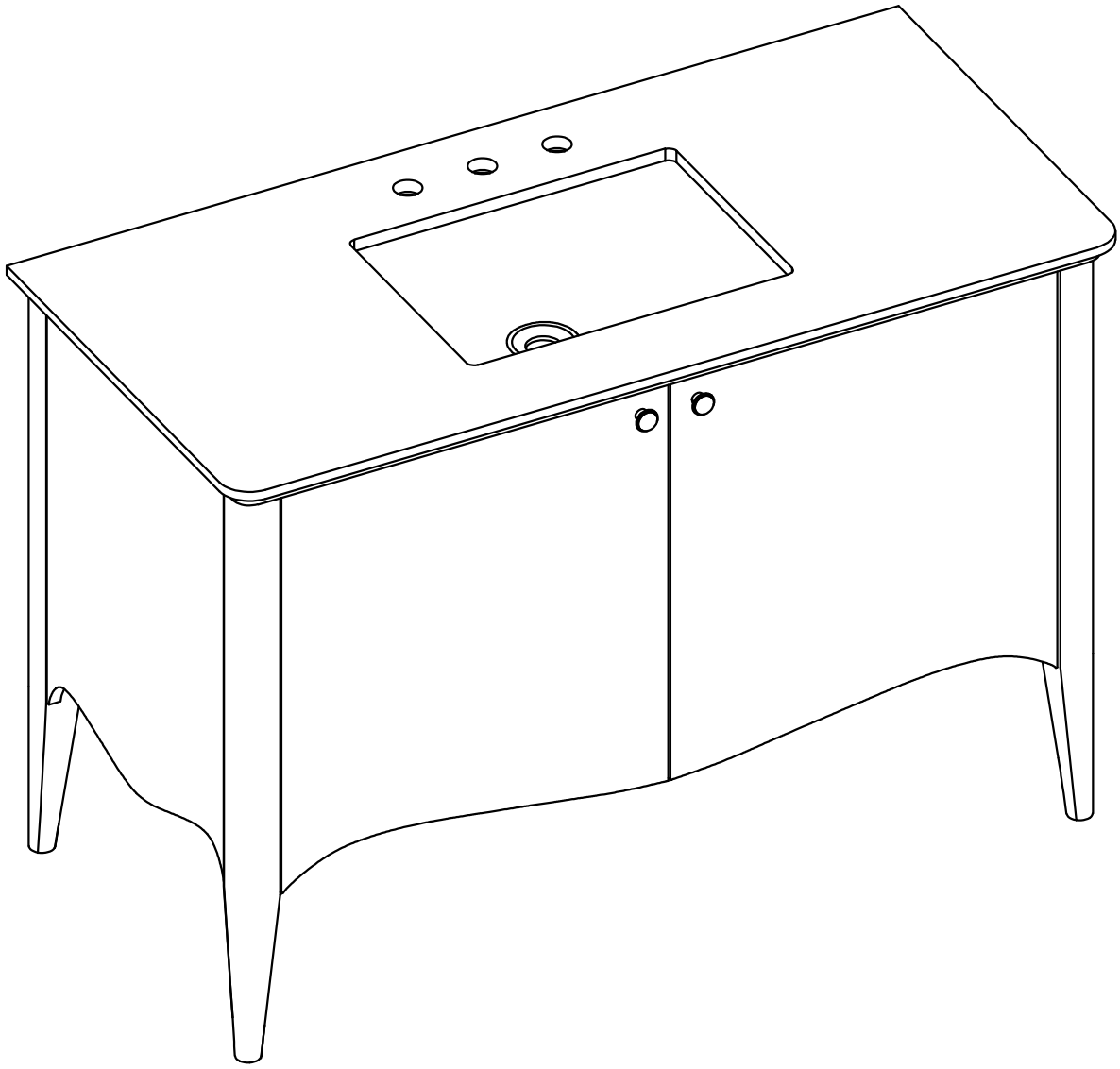

Made in Vietnam

Step 11

Adjust the Hinges (If Necessary)

Once the furniture is level, check the doors. If they appear misaligned or don't close properly:
Make sure that the furniture is level left to right and front to back before attempting to adjust the hinges.

Identify the hinges - The hinges have adjustment screws that control movement in different directions.

1. Back and Forth Adjustment: To move the cabinet door closer to or farther from the cabinet frame
2. Left and Right Adjustment: To shift the cabinet door sideways for alignment.

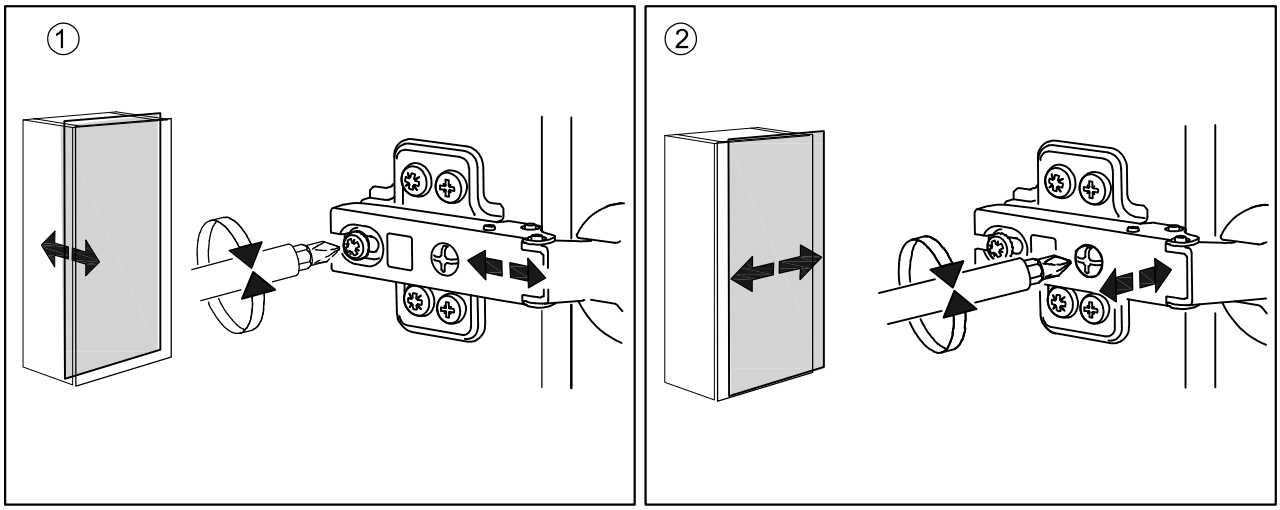

TIPS FOR ADJUSTMENT:

These “adjustments” are not preset and will need to be checked to meet the desired look

- We recommend the use of a #2 Phillips Screwdriver.
- Adjust in small steps and check your progress frequently.
- Use a measuring tape to ensure the gaps between the top and bottom of the door are even.
- Avoid forcing the door closed if it does not align properly, as this may damage the door.
- If the alignment is still off, make further adjustments as needed.

By following these steps, you can achieve a balanced door alignment.

If you need further adjustments, repeat the process in small increments.

Important notes

While adjusting the hinges, firmly hold the door in place to prevent it from falling and getting damaged.
Repeatedly tightening and loosening the hinge screws can cause the screw holes to widen.
To avoid this, minimize adjustments and avoid overtightening.