Installation Instruction

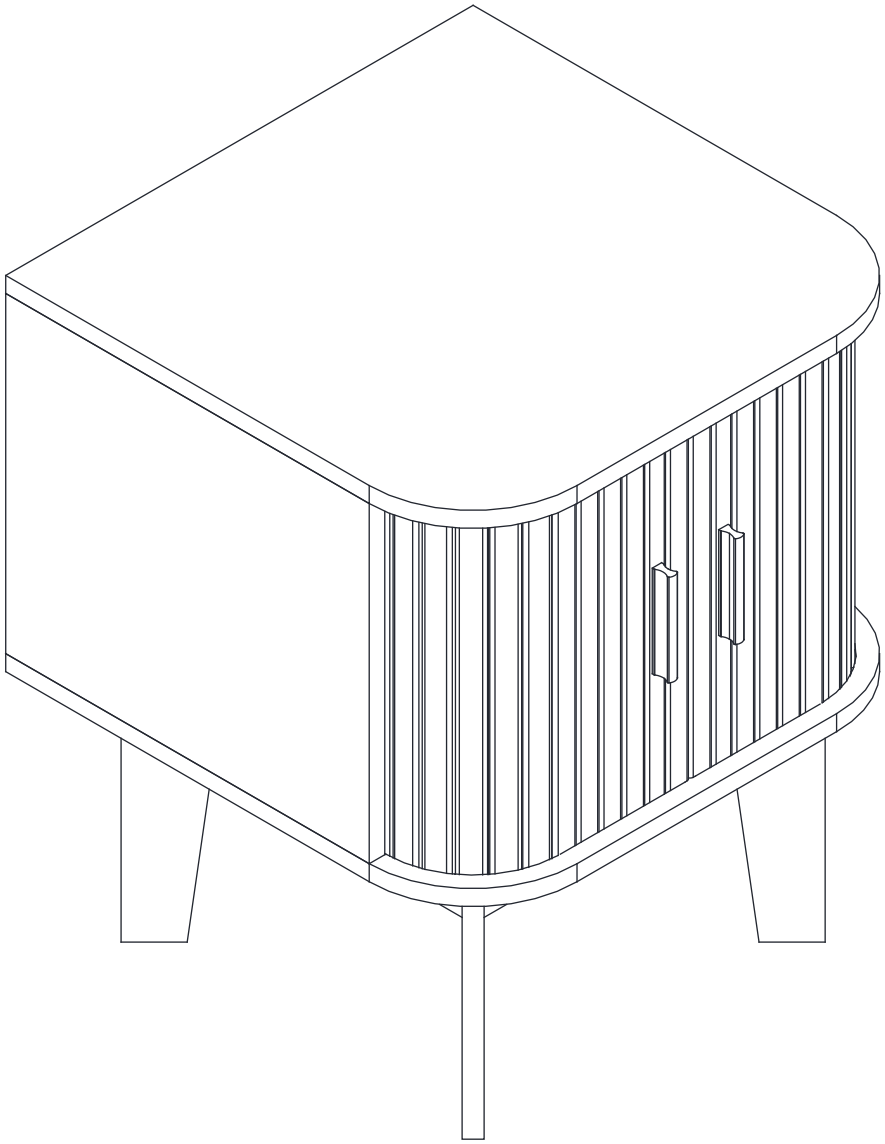

Assembling

What you need

- Use the packaging carton as a working surface to prevent product damage during assembly
- Phillips head screwdriver

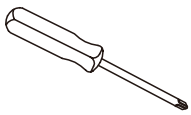

Weight Limitation

44 lbs Cabinet Top

11 lbs Bottom



2 PERSONS

What's included

Code	Description	Qty
A	Cam Bolt M6X35MM	4
B	Cam Lock 15X10MM	4
C	Screw M4X35MM	4
D	Screw M4X35MM	16
E	Screw M4X20MM	16
F	Wooden Dowel M8X30MM	12
G	Bolt M4X12MM	4
H	Handle	2
I	Screw M3X14MM	4
J	Plastic Corner Support	4

The Hardwares

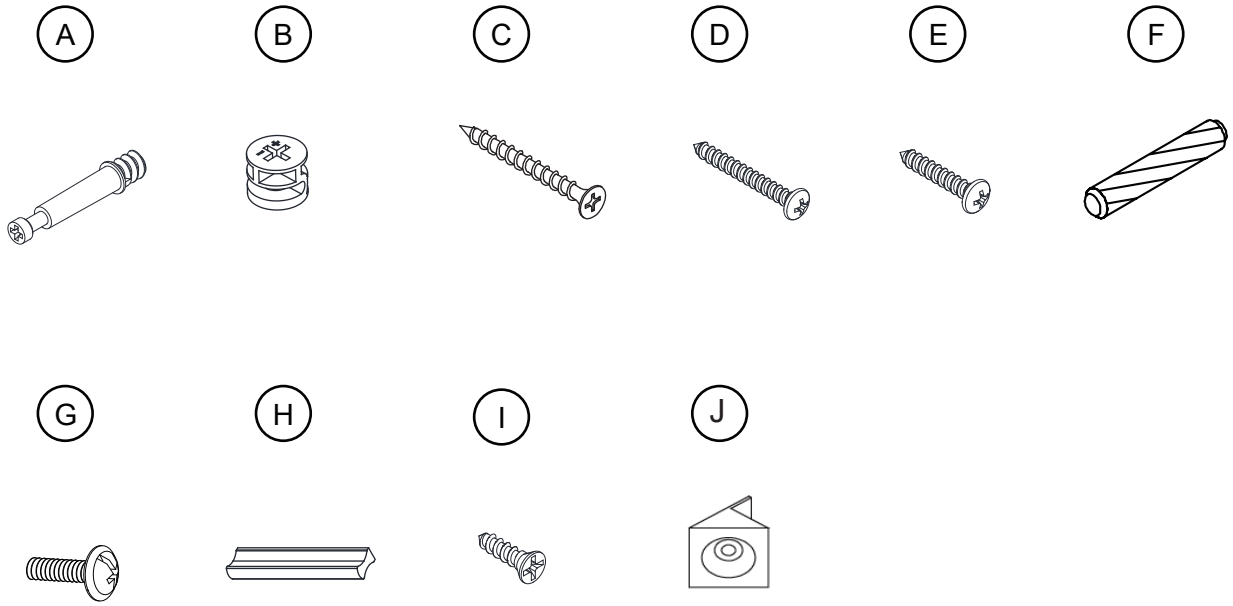

IMPORTANT:

1. Do not tighten bolts / screws completely until all bolts / screws are lined up and inserted into holes.
2. Do not over tighten screws and bolts to avoid stripping.
3. Please use hand tools to assemble this product. Do not use power tools.
4. Must need 2 people to assemble this product.



Included Accessories

Code	Description	Qty
1	Cabinet Top	1
2	Left Side Panel	1
3	Right Side Panel	1
4	Bottom Panel	1
5	Back Panel	1
6	Foot	4
7	Bottom Support Panel	4
8	Bottom Corner Support Panel	4
9	Door	2

The Accessories

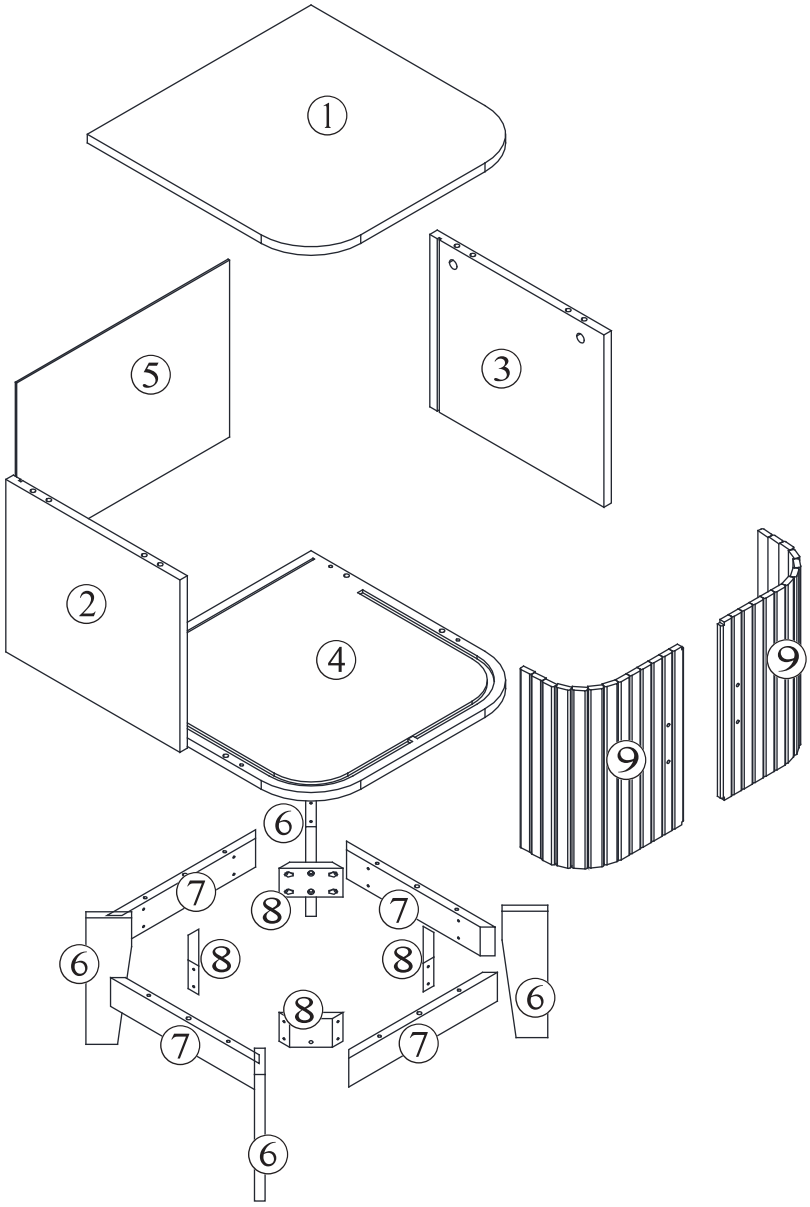

Step 1

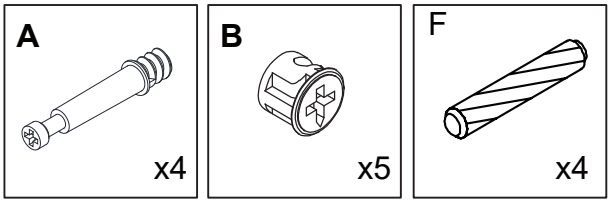

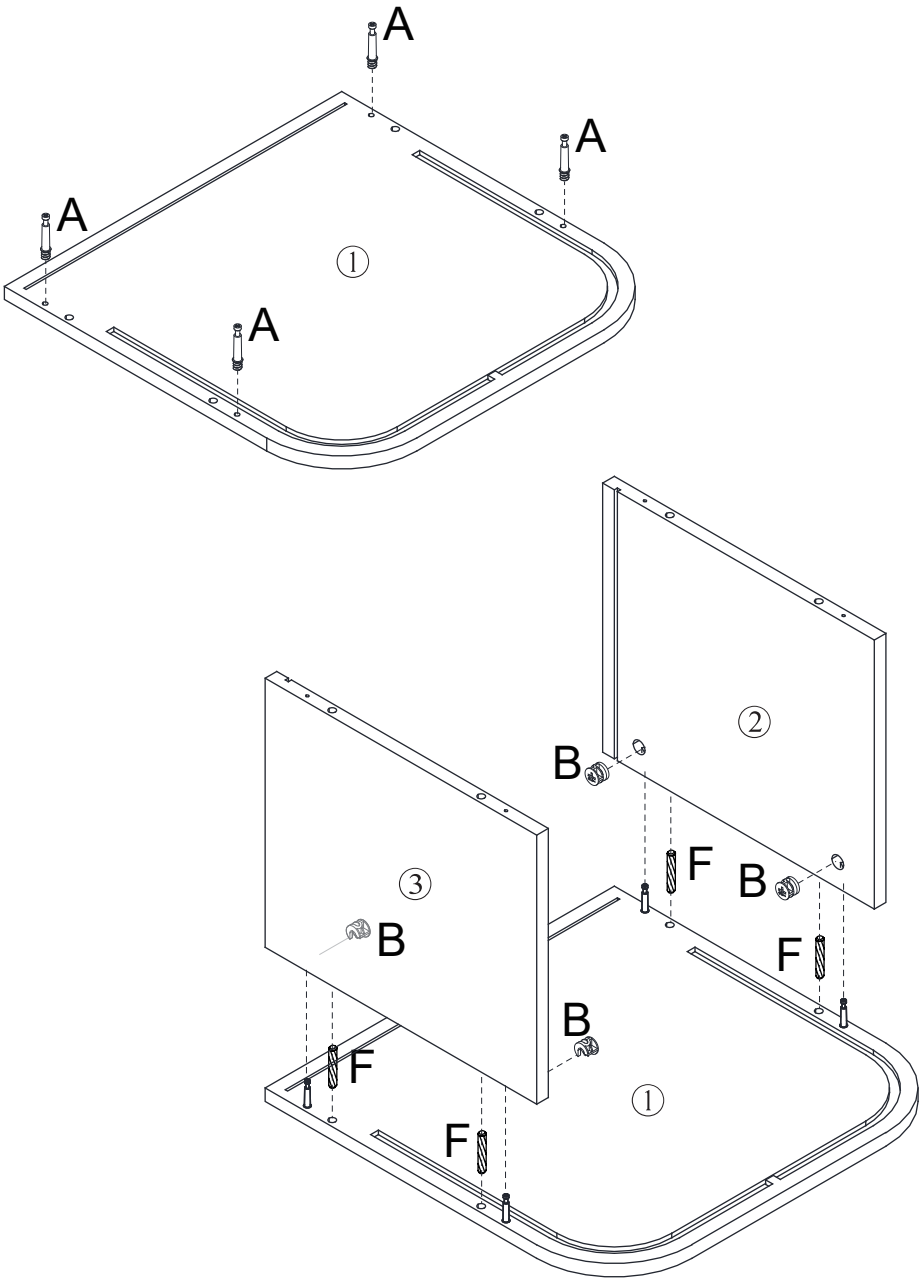

Step 2

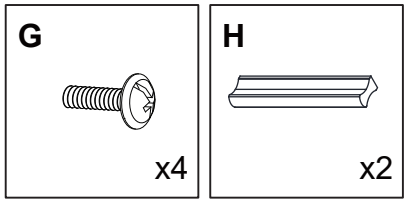

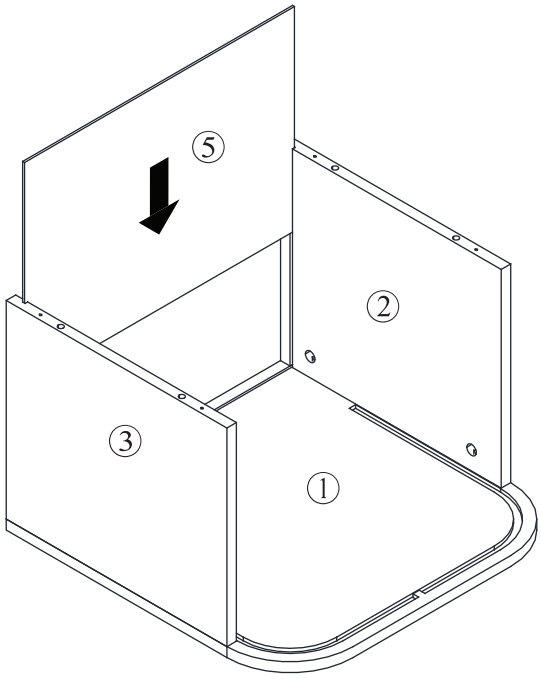

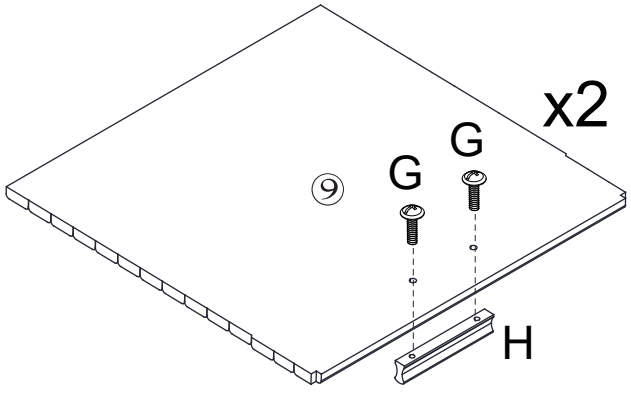

Step 3

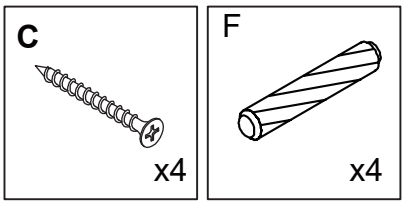

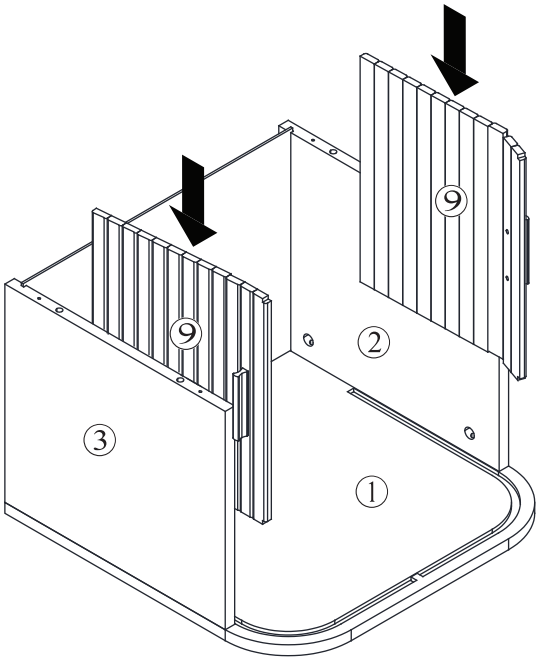

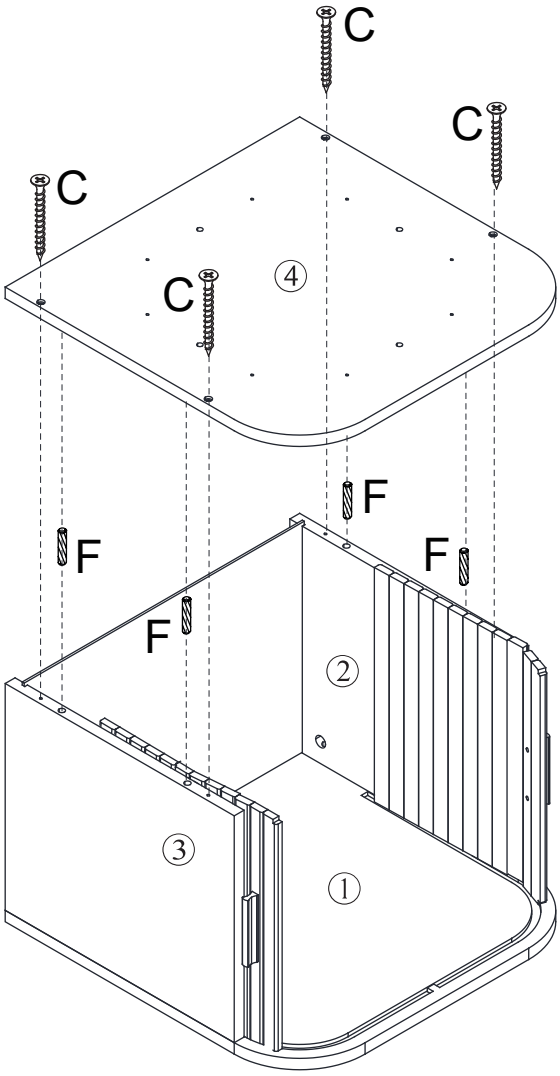

Step 4

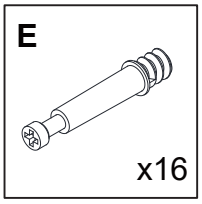

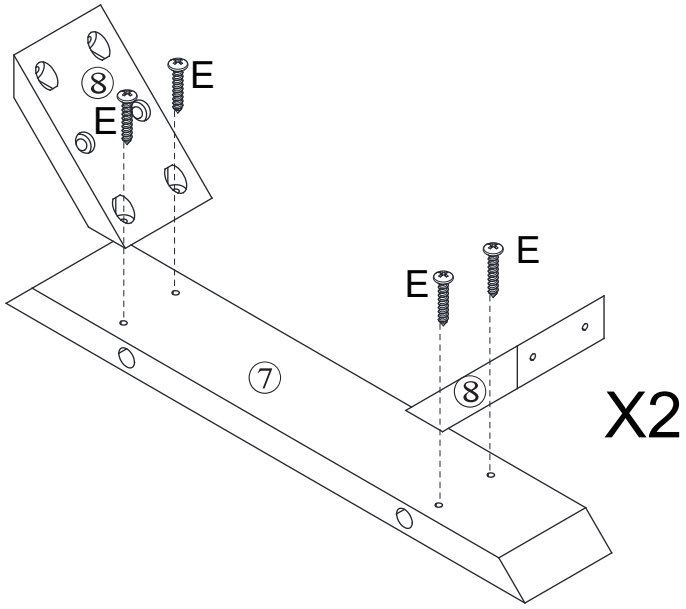

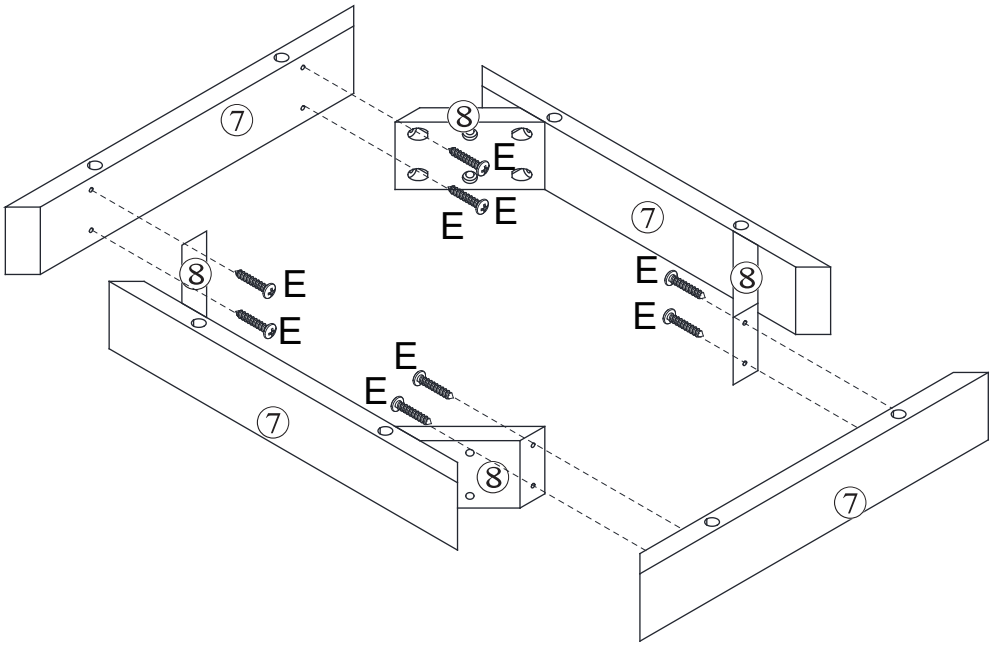

Step 5

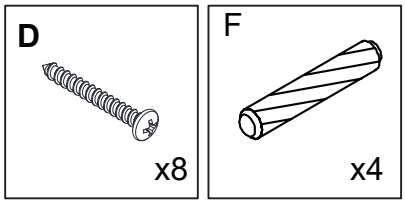

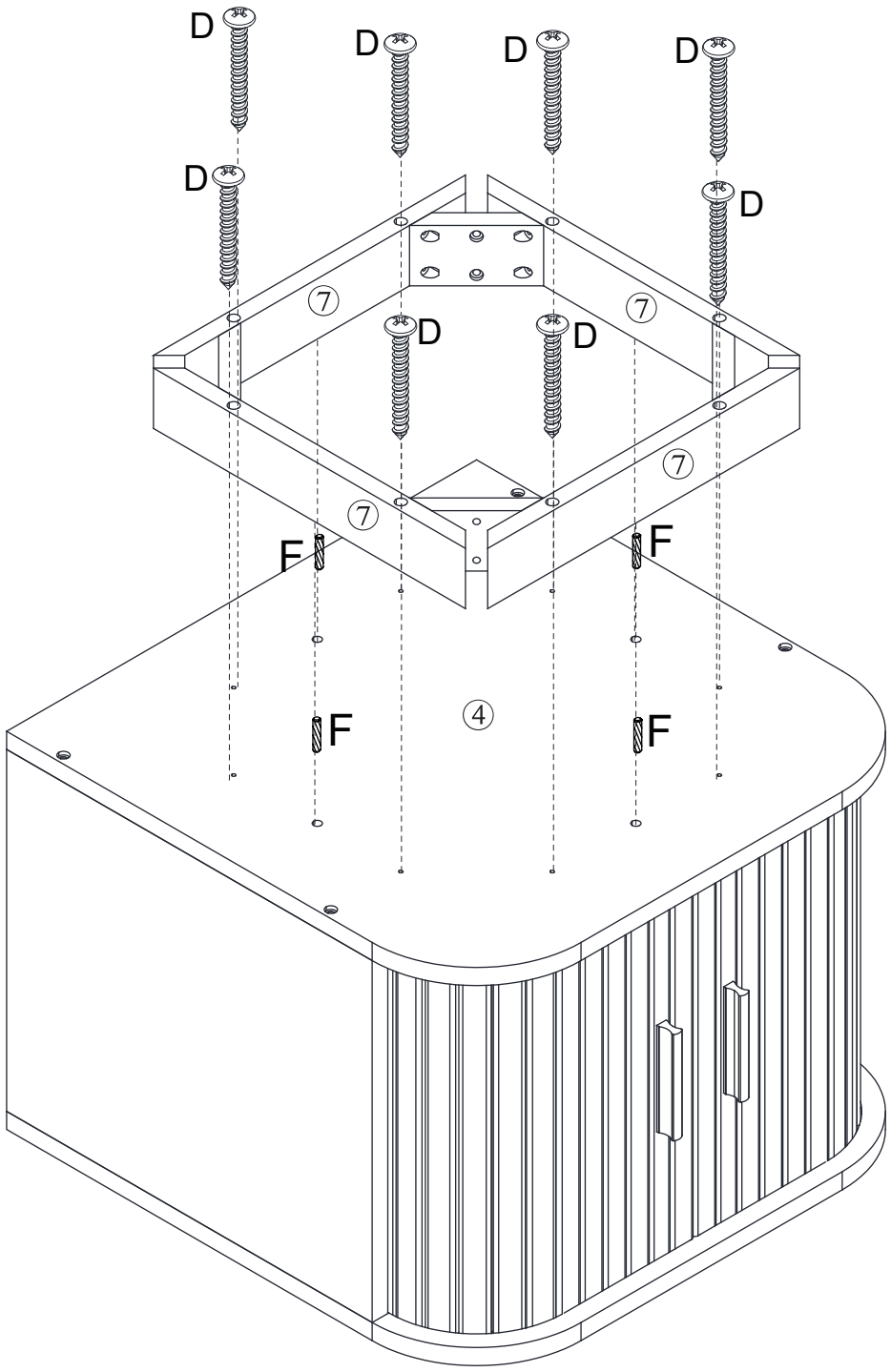

Step 6

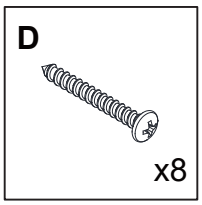

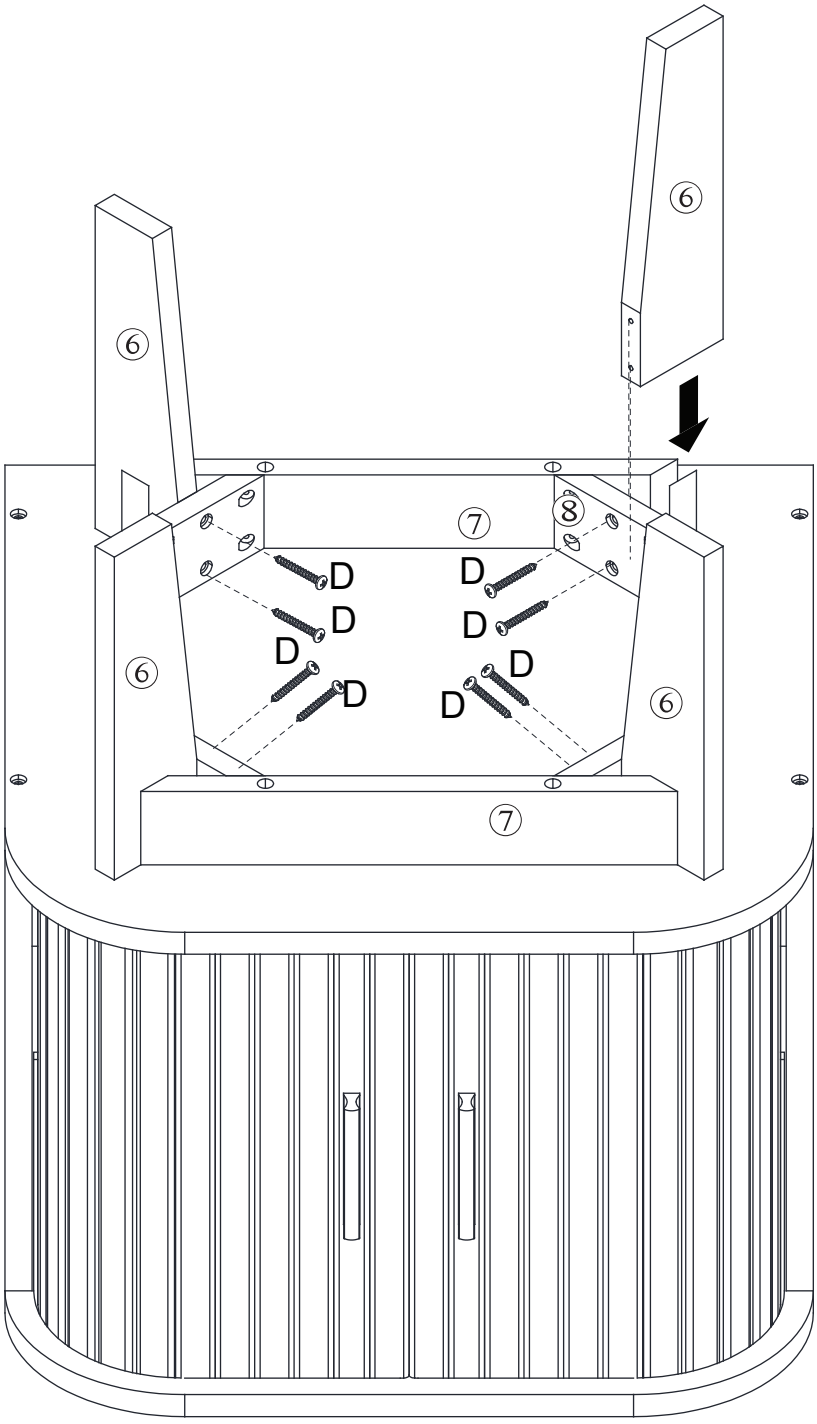

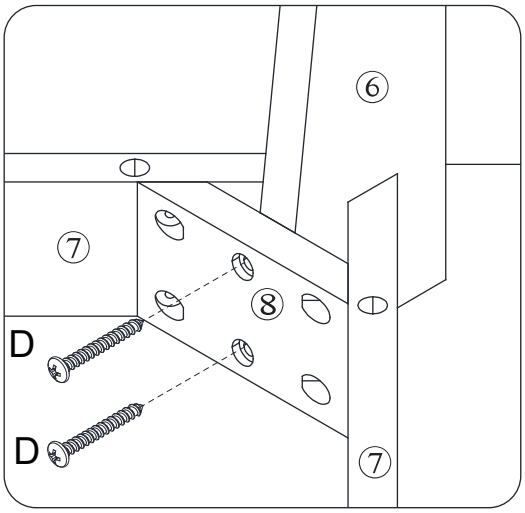

Step 7

