BATHROOM VANITY SET

Colors/Finishes: White,Navy Blue,Sage Green,Oak,Walnut

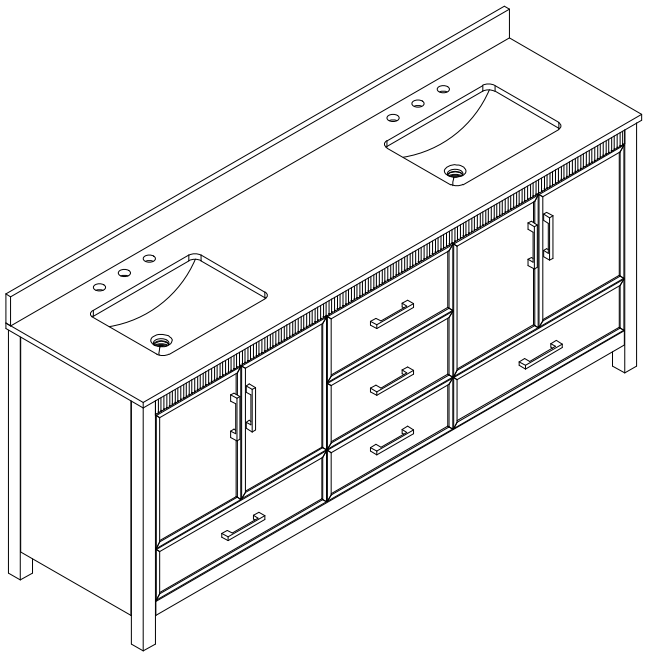

VANITY FEATURES:

1.Material:

WT / NB / SG: Solid wood frame, high-quality plywood.

OAK / WAL: Oak wood frame, high-quality venner plywood.

2.Doors: 4 soft-close doors. Soft-close hinges system.

3.Drawers: 5 soft-close drawers, Concealed Soft-close sliders.

4.Hardware: Metal Alloy

5.Installation Type: Freestanding

6.Built-in Adjusters: Adjustable height levelers

7.Vanity Top: High-quality quartz with two undermount sink

8.Assemble required: No

9.Vanity top Included: Yes

10.Nominal Dimension(W*D*H): 80*22*35 inches

Contents

80″Vanity……PAGE2
80″Vanity Top……PAGE3
Vanity Installation……PAGE4

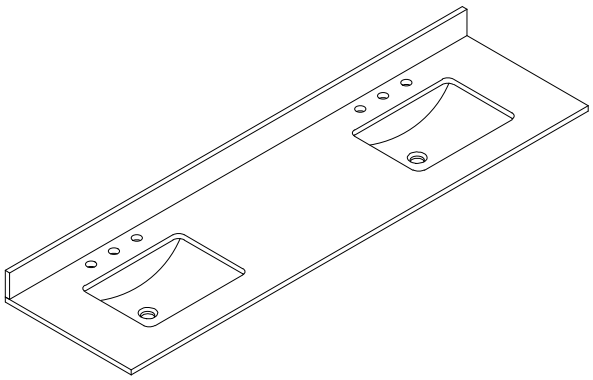

VANITY TOP FEATURES:

1.Material: High-quality quartz

2.Top Color: Pure White Quartz

3.Sink: 2*20”under mount rectangle sink

4.Faucet Holes: Top pre-drilled for 8”widespread faucet holes

5.Sink Certified: CUPC certified

6.Backsplash: 4”backsplash included

7.Faucet Included: No

8.Nominal Dimension(W*D*H): 80*22*0.79 inches

All dimensions and specifications are nominal and may vary.Use actual products for accuracy in critical situations.

PRODUCT DIAGRAMS:

Front

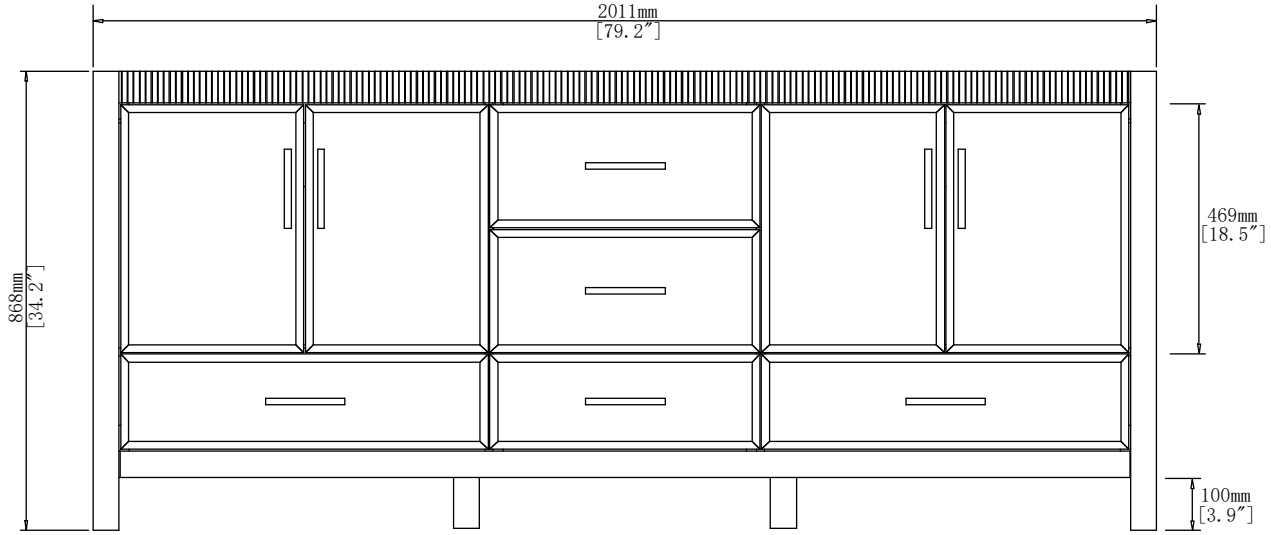

Back

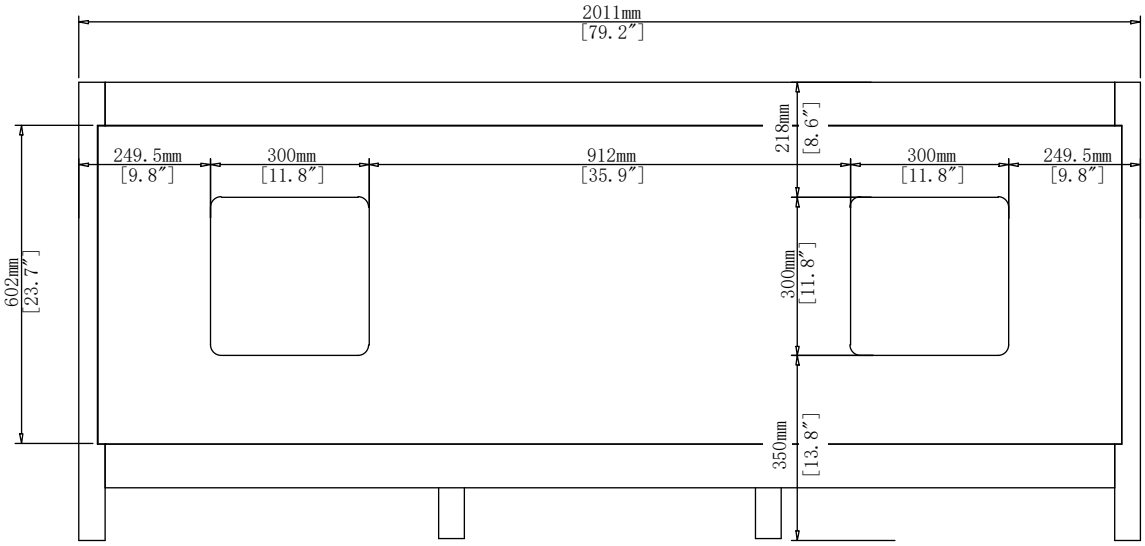

Top

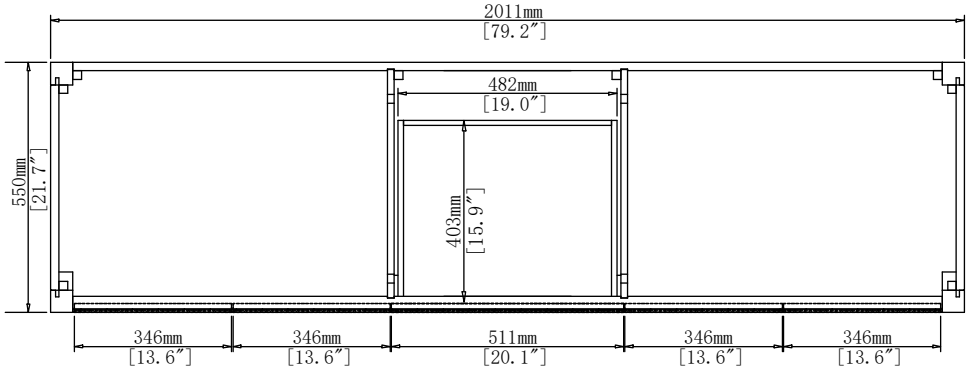

Side

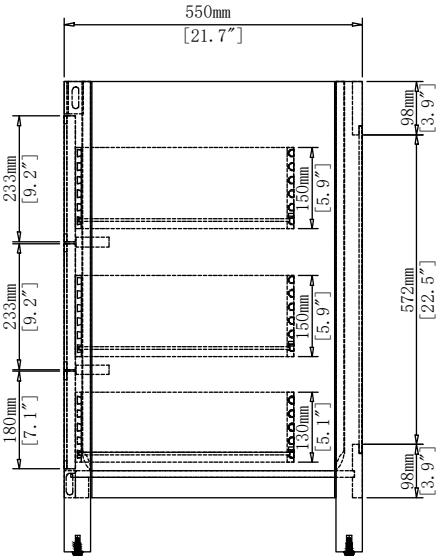

All dimensions and specifications are nominal and may vary.Use actual products for accuracy in critical situations.

VANITY TOP

With rectangular undermount sink

VanityTop

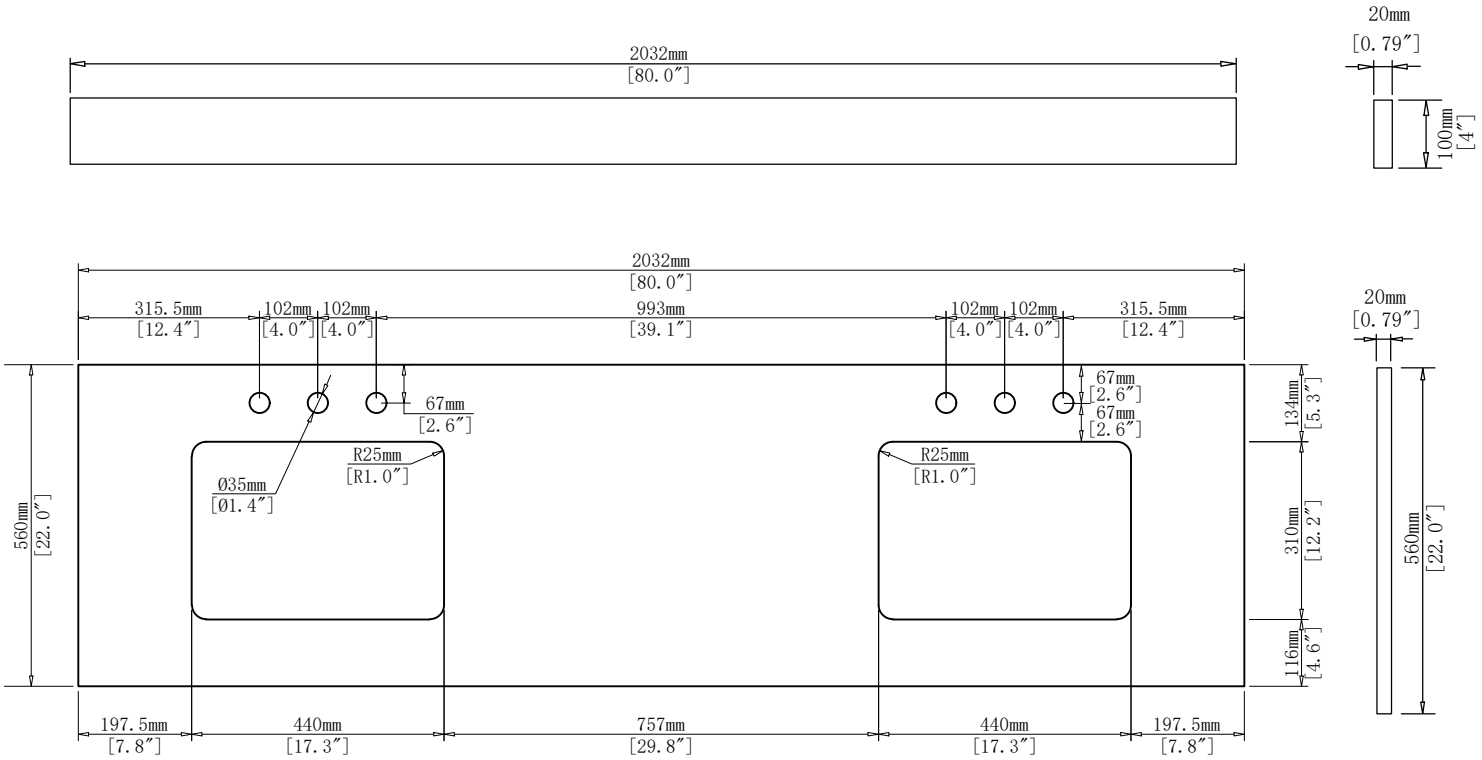

Undermount Sink

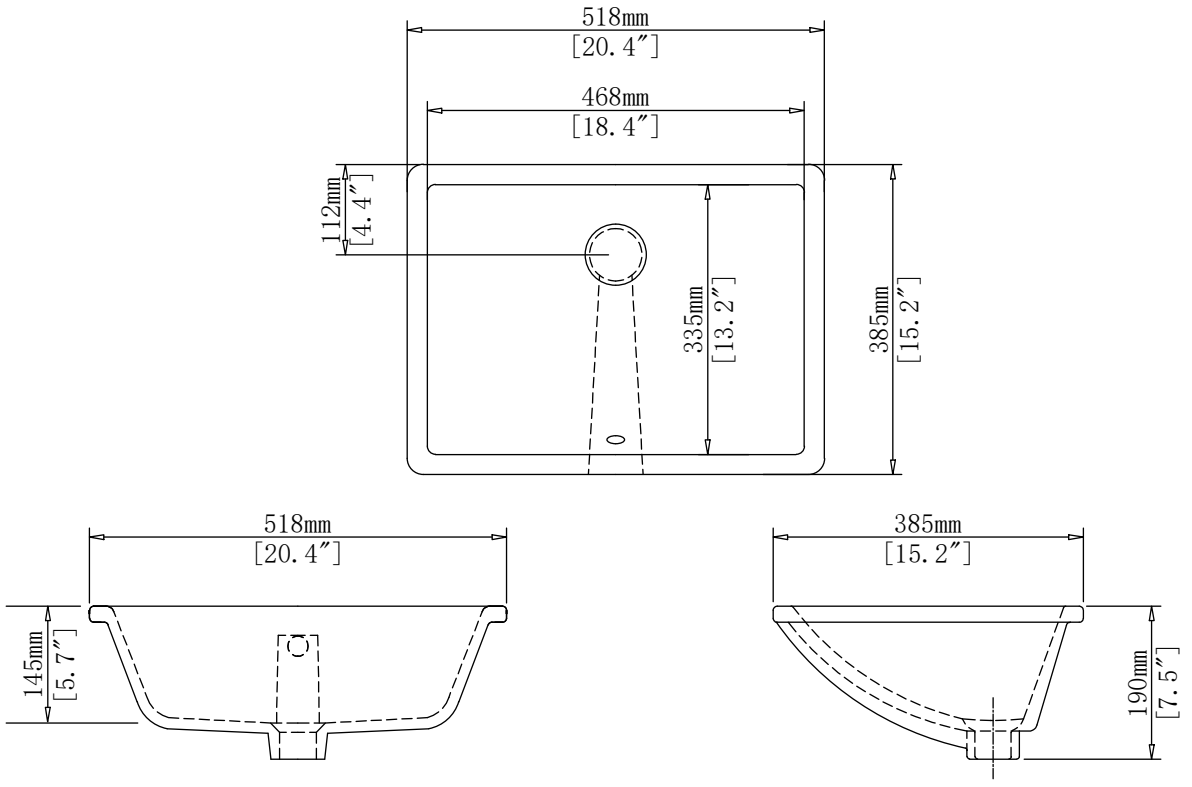

All dimensions and specifications are nominal and may vary.Use actual products for accuracy in critical situations.

Vanity Installation

SUGGESTED TOOLS AND MATERIALS:

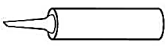
Sealant


Measuring tape


Safety glasses


Rag


Level

INSTALLATION INSTRUCTLONS

We recommend consulting a professional if you are unfamiliar with installing bathroom fixtures and plumbing .We accept no liability for any damage to the floor,plumbing,vanity cabinet,sink,counter top,or personal injury during installation.

1

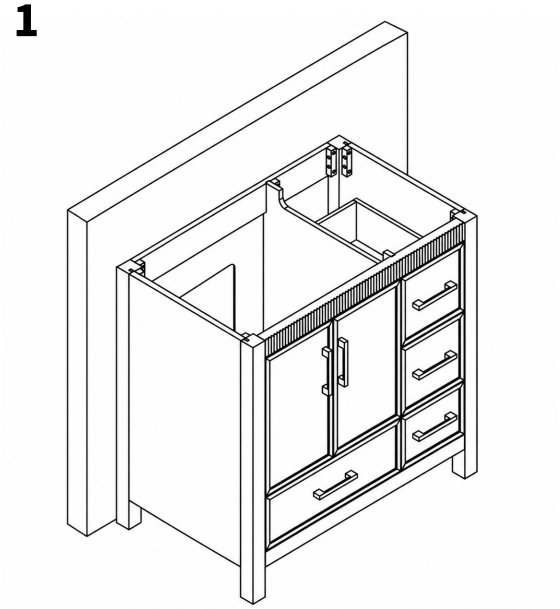

Remove vanity from box and examine vanity for any defects or damage.Carefully place vanity against wall.

2

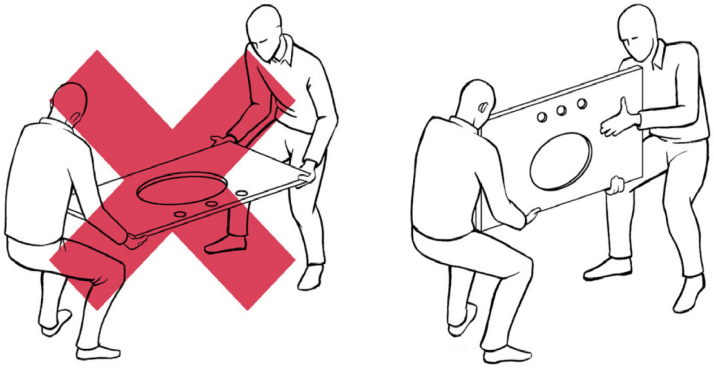

Always use a two man crew,a single person crew is much more likely to break or chip the stone top.

3

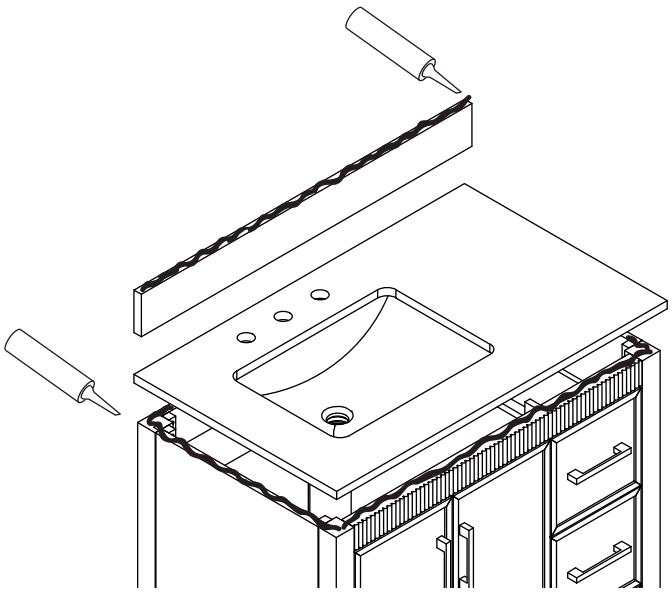

Apply bead of quality sealant evenly along the bottom of backsplash and the top of the vanity.

4

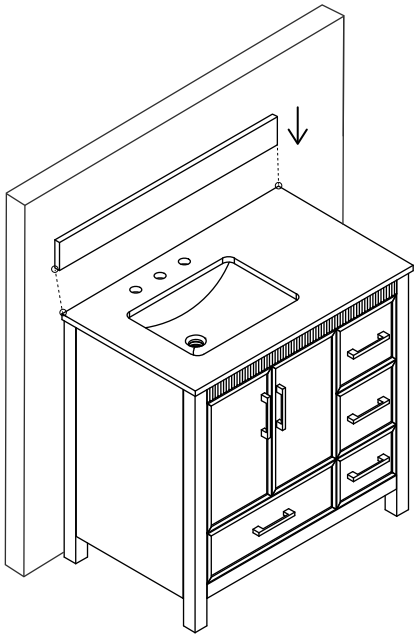

Finally,place the bottom side of back splash with sealant onto the counter top and check alignment of back splash.

* Note:sink style,shape,counter top,vanity may vary from the picture above. Instructional purpose only *