1680013COM - BOOKCASE ROOM DIVIDER

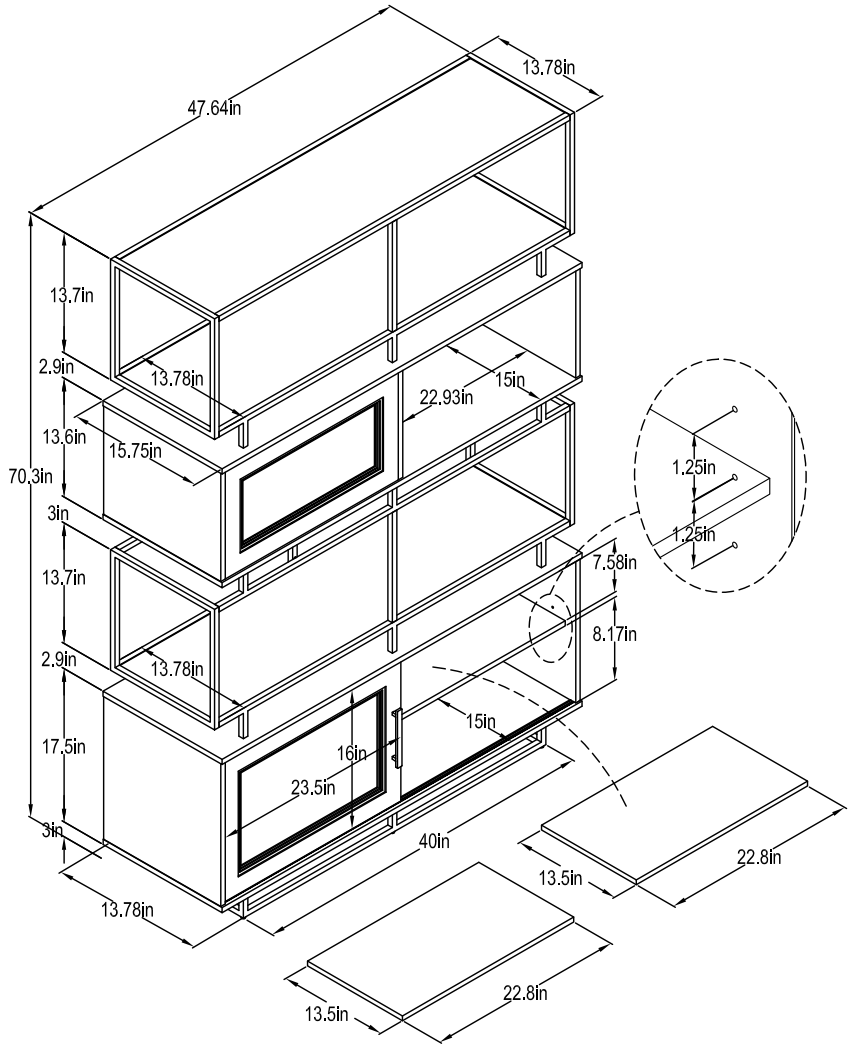

Wood Breakdown:
MDF 100%, PB 0%.
Total storage: 16.6 cubic feet

Overall Product Size:
47.64" W × 15.75" D × 70.3" H
121cm W ×40cm D × 178.6cm H

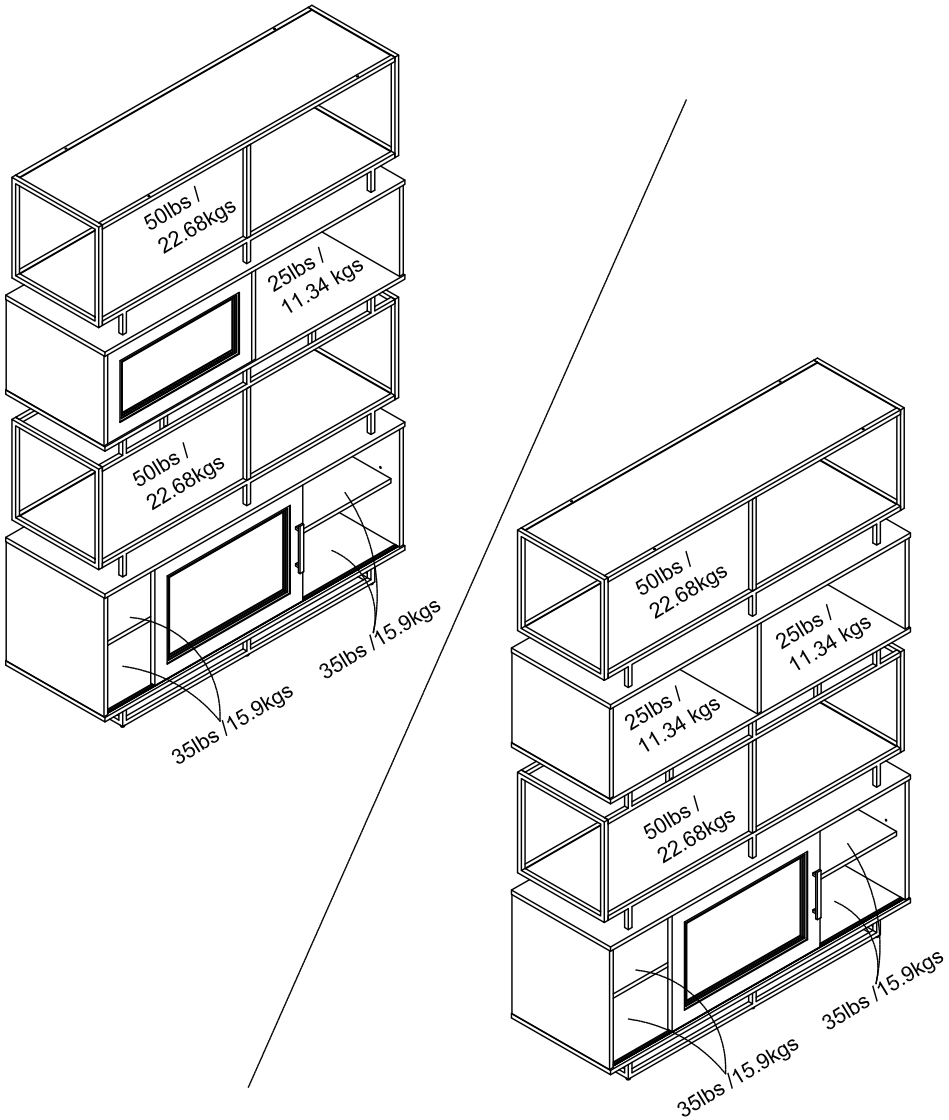

Maximum Weight Capacities
Unit Weight: 136.4lbs. (62kg)