ASSEMBLY INSTRUCTION

A

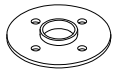

x2

B

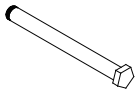

x2

C

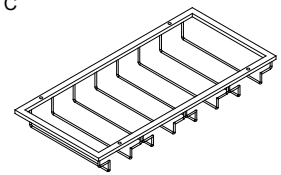

x1

D

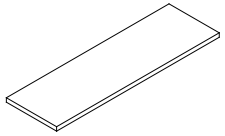

x1

E

x4

H

x8

J

x8

1

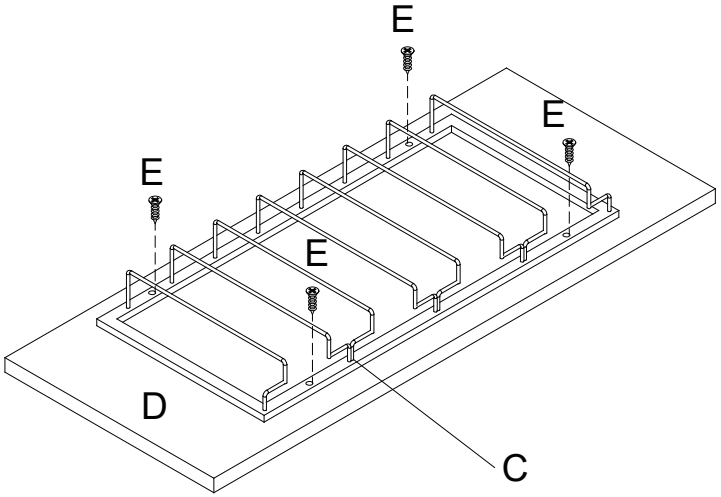

2

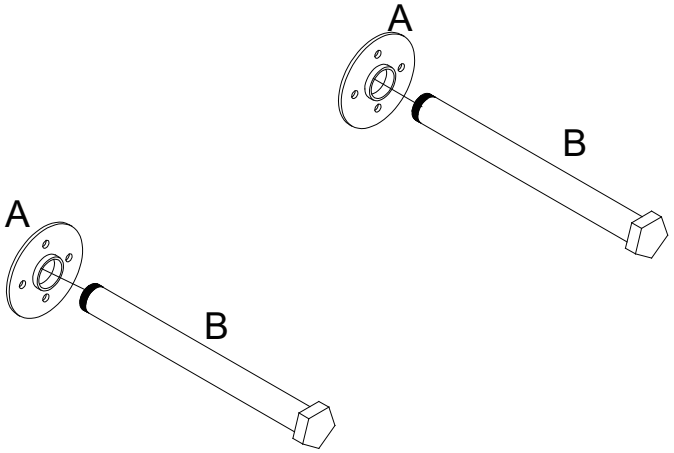

3

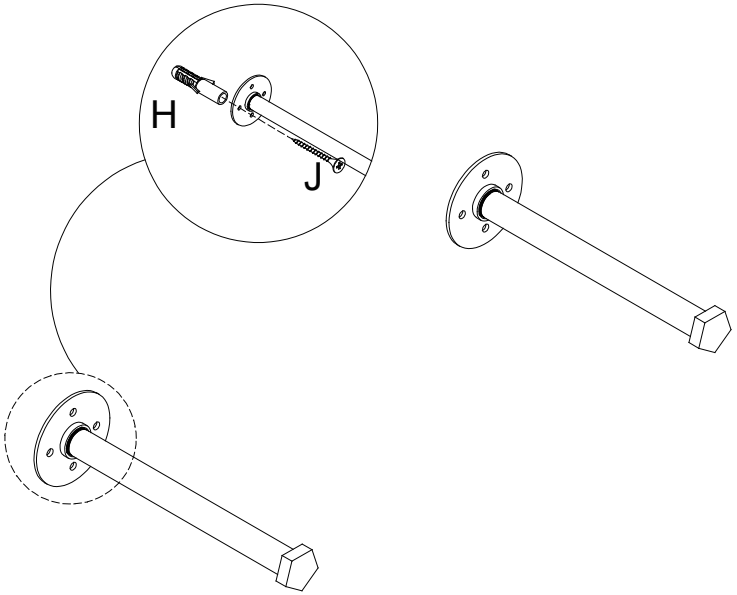
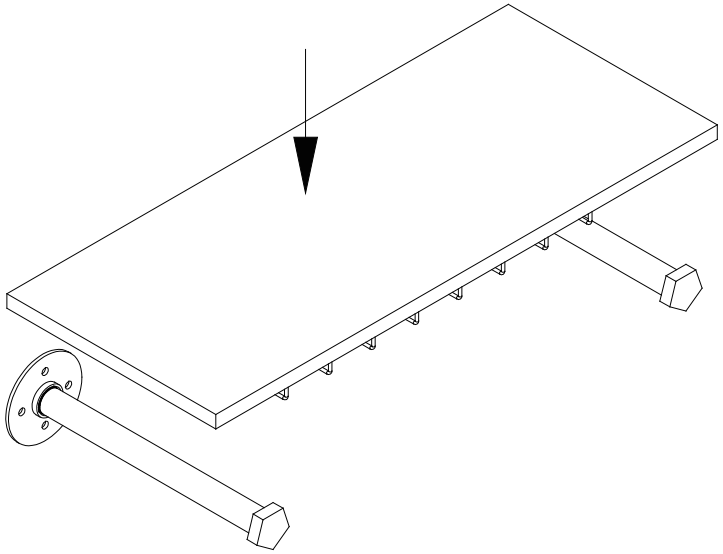
4