SPEC SHEET

MARAIS 3-TIER SHELF 36"W
Item # AFGS-313-19

Height : 60"
Length: 36"
Depth: 14"
Finishes: Aged Brass & White

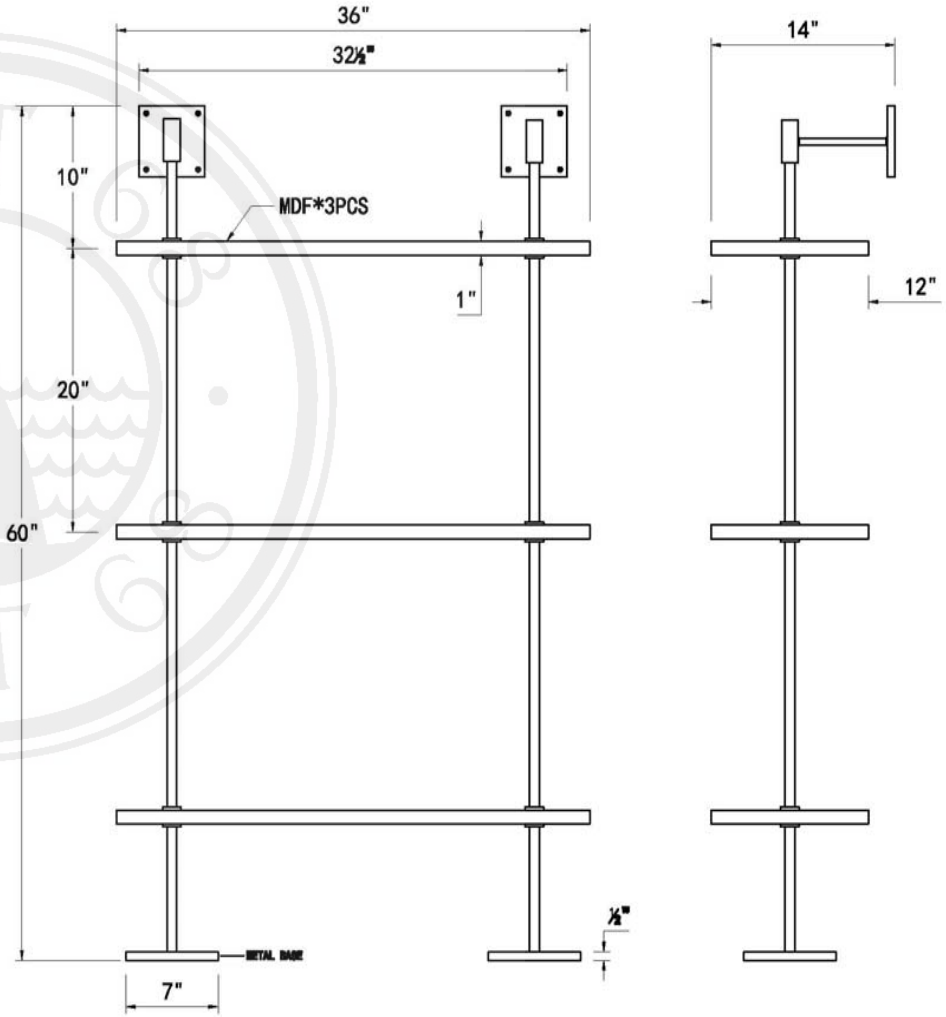

All Port 68 designs are copyrighted. All rights reserved.