TEAR SHEET

Windsor Medium Hanging Shade

Item # RL 5250PN-SP



Designer: Ralph Lauren

O/A Height: 40.5"
Fixture Height: 13"
Width: 24.25"
Canopy: 7" Octagon
Finishes: BZ, NB, PN
Shade Treatments: SP
Shade Details: 18.75" x 24.25" x 12.5"
Socket: 6 - E12 Candelabra
Wattage: 6 - 6.5 LED B11
Weight: 16 Pounds
Note: 120V Configuration Only



CANOPY DETAIL

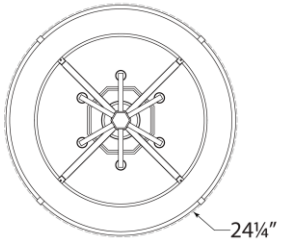

Bottom View

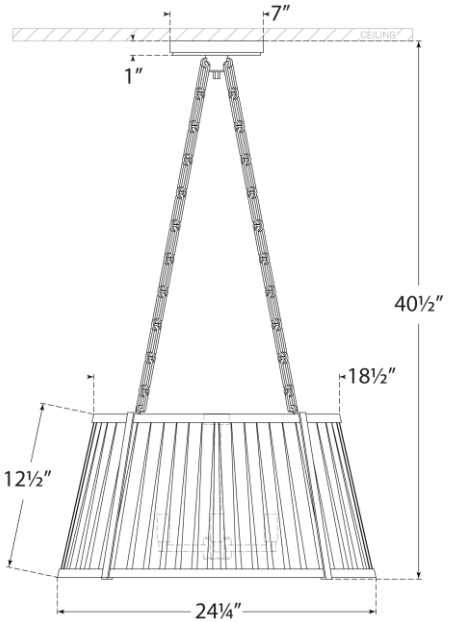

Front View

VISUAL COMFORT & CO.