Assembly Instructions

Caution: You must read this before you proceed

Care & Maintenance

- Not for commercial use. For residential use only.
- Do not put hot items directly on furniture surface.
- Do not clean furniture with harsh cleansers or polish.
- Do not place furniture under direct sunlight.
- Do not place furniture near heating or cooling vents.
- Do not write on furniture without a padded barrier to protect the surface.
- Do not place furniture outside. For indoor use only.
- Stains may be removed with mild soap solution and damp cloth.
- Children should not climb or jump on the furniture.
- Dust and pick-up spills using a clean, non-colored, lint-free cloth.

BED
N769P459373W

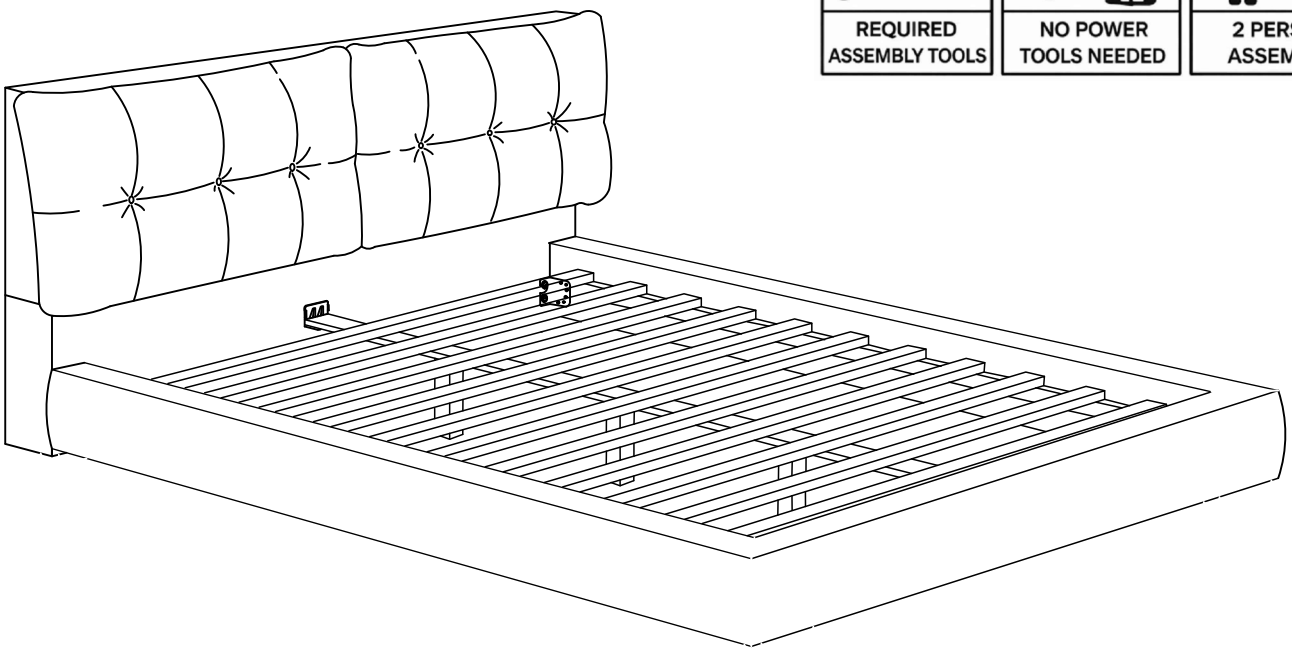

WARNING
STRANGULATION HAZARD.

NEVER place bed near window where cords from blinds or drapes may strangle a child.
NEVER suspend strings over bed.
NEVER place item with a string, cord, or ribbon, such as hood strings or pacifier cords, around a child's neck. These items may catch on bed parts.
ALWAYS follow assembly instructions.

WARNING

Not intended for children under the age of six. INFANTS HAVE DIED FROM BECOMING ENTRAPPED IN BEDS. Opening in and between bed parts can entrap the neck and head of a small child.
NEVER use bed for child under the age of six.
The mattress must be appropriately sized for the bed. If the mattress is undersized, dangerous gaps can exist and a person can become entrapped or antangled in the frame and suffocate.

Note : This Bed is NOT a TOY.
Keep your child/children at bay during the assembly process.
THE BED is HEAVY.
To prevent injury to yourself or damage to the product a minimum of two adults are required whenever moving or lifting it.

Hardware List

No.	Description	Sketch	Size	Qty.
①	Bolt + (Lock washer & Flat washer)	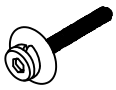	M6 x 40mm	7 Pcs
②	Bolt + (Lock washer & Flat washer)		M8 x 25mm	9 Pcs
③	Bolt + (Lock washer & Flat washer)		M6 x 25mm	3 Pcs
④	Allen Wrench		M5	1 Pc
⑤	Allen Wrench		M4	1 Pc
⑥	Screw	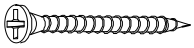	M4 x 50mm	9 Pcs
⑦	Screw	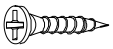	M4 x 32mm	13 Pcs
	Philips Head Screwdriver	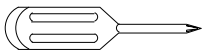	Not Provided	

PART LIST

Label	Picture	Description	Qty.
A	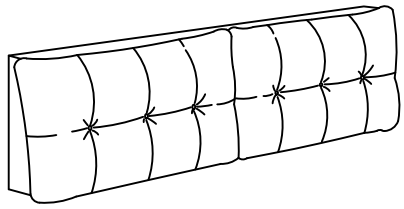	Upper Headboard	1 Pcs
B	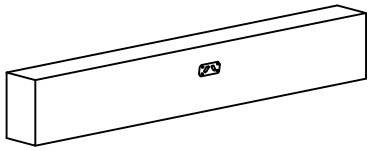	Lower Headboard	1 Pcs
C	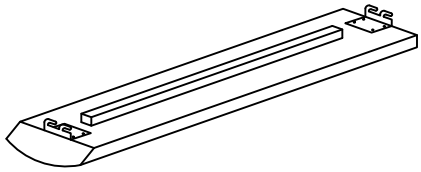	Side Rail (Left)	1 Pcs
D	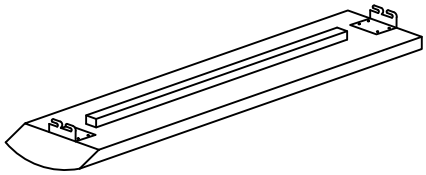	Side Rail (Right)	1 Pcs
E	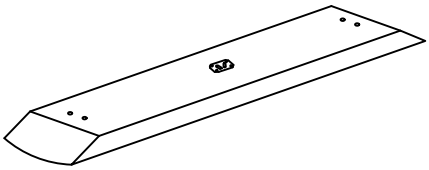	Footboard	1 Pcs
F	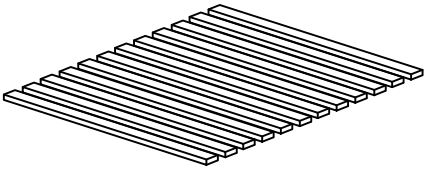	Slats	12 Pcs
G	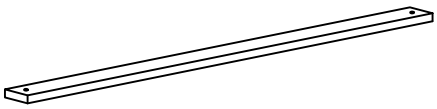	Center Support	1 Pcs
H		Support Legs	3 Pcs
I	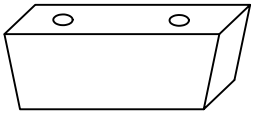	Leg	4 Pcs
J	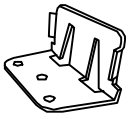	Center Wood Bracket	2 Pcs

Assembly Preparation

Before Beginning Assembly:

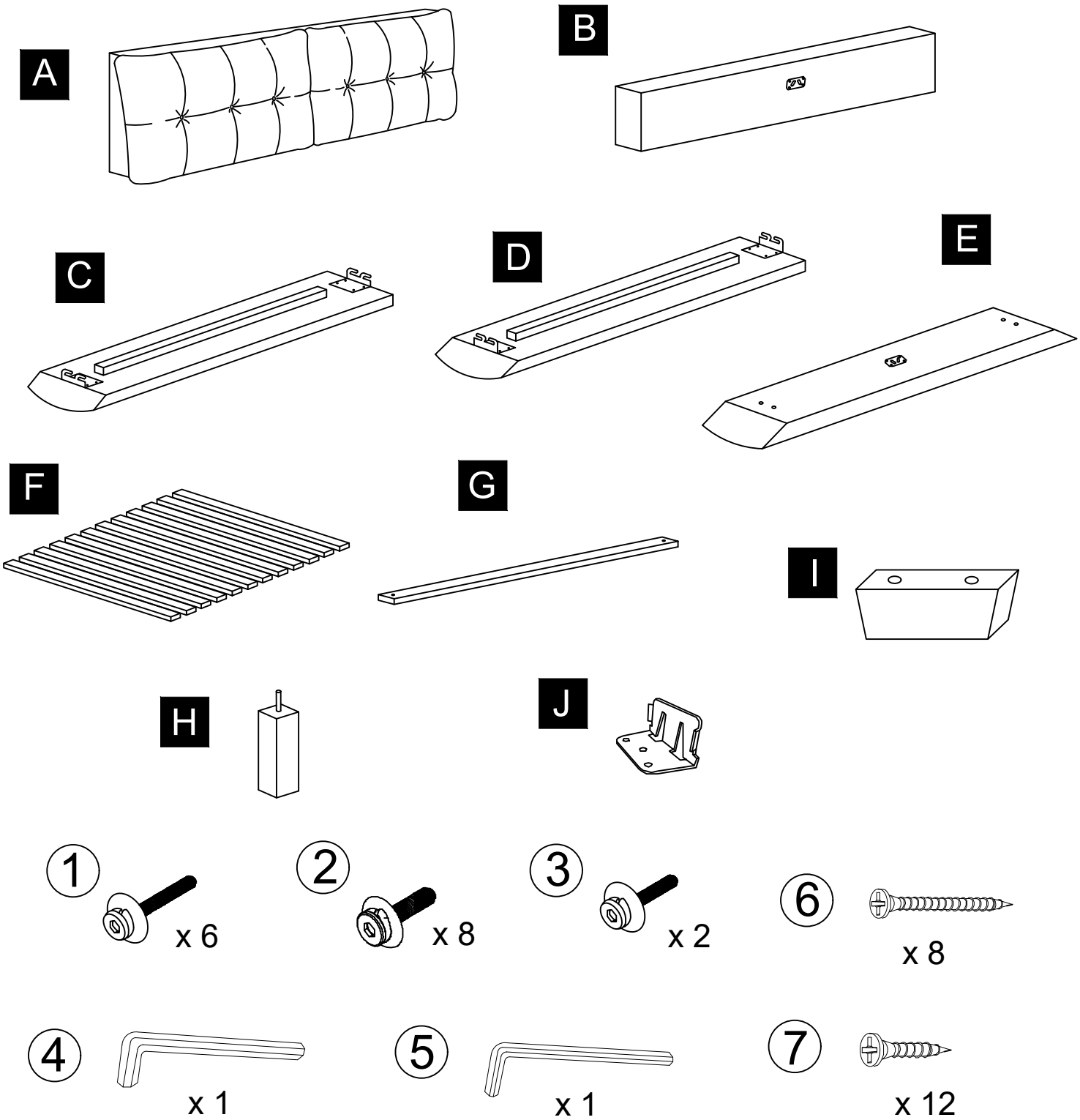

- Read instructions, cover to cover-
- Have 2 adults on hand for assembly-
- Do not assemble on flooring or carpet-
- Assemble on a clean non-marring surface (packing foam)
- Save all packaging until finished-

Assembly Steps

Overview

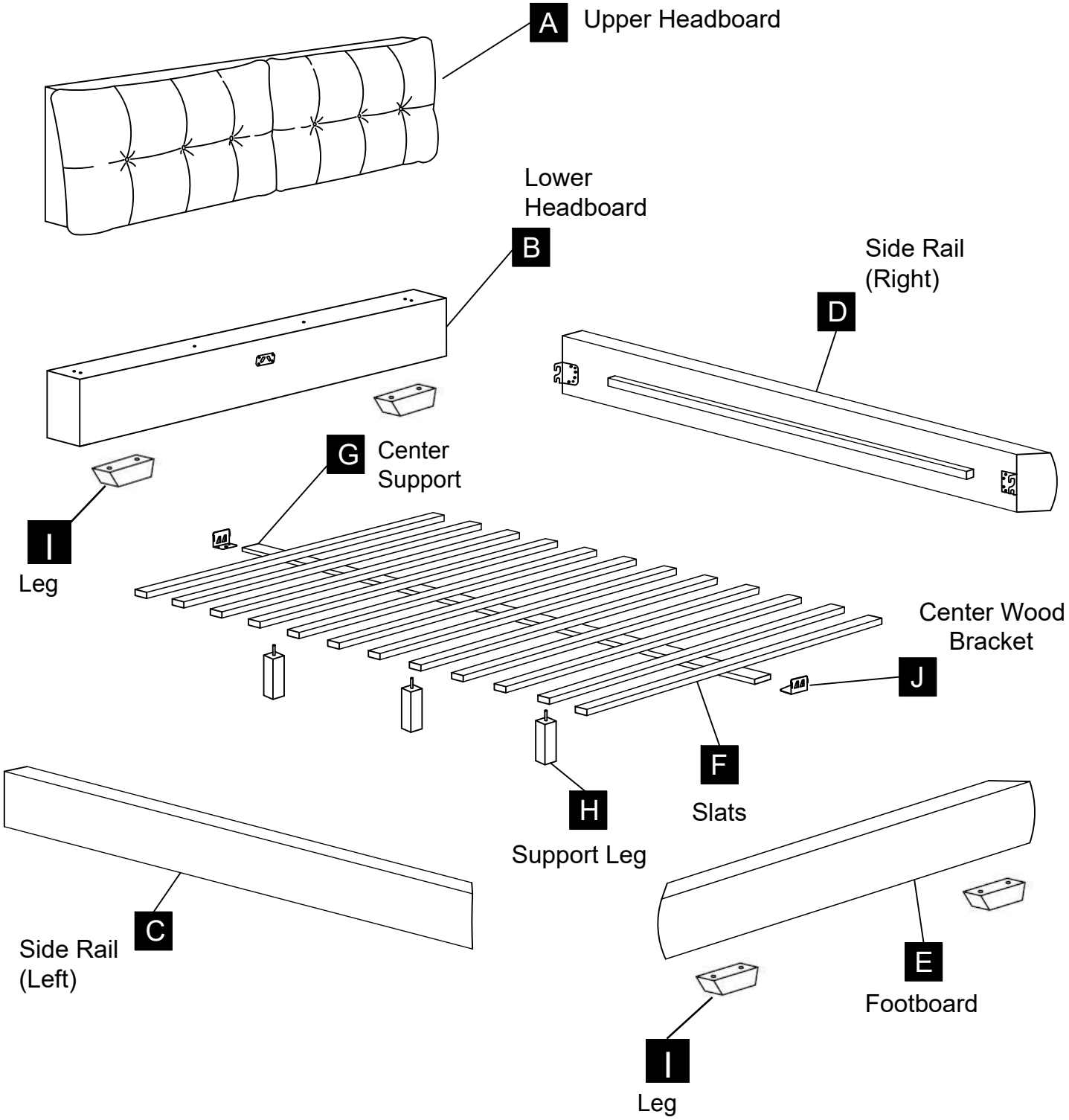

This Bed has multiple parts and may require up to 30 minutes to assemble. To give you an overview of the Bed parts, the above picture is provided to help you put the various parts into perspective. Please read through the instructions below to familiarise yourself with the parts and steps before assembly.

Step 1

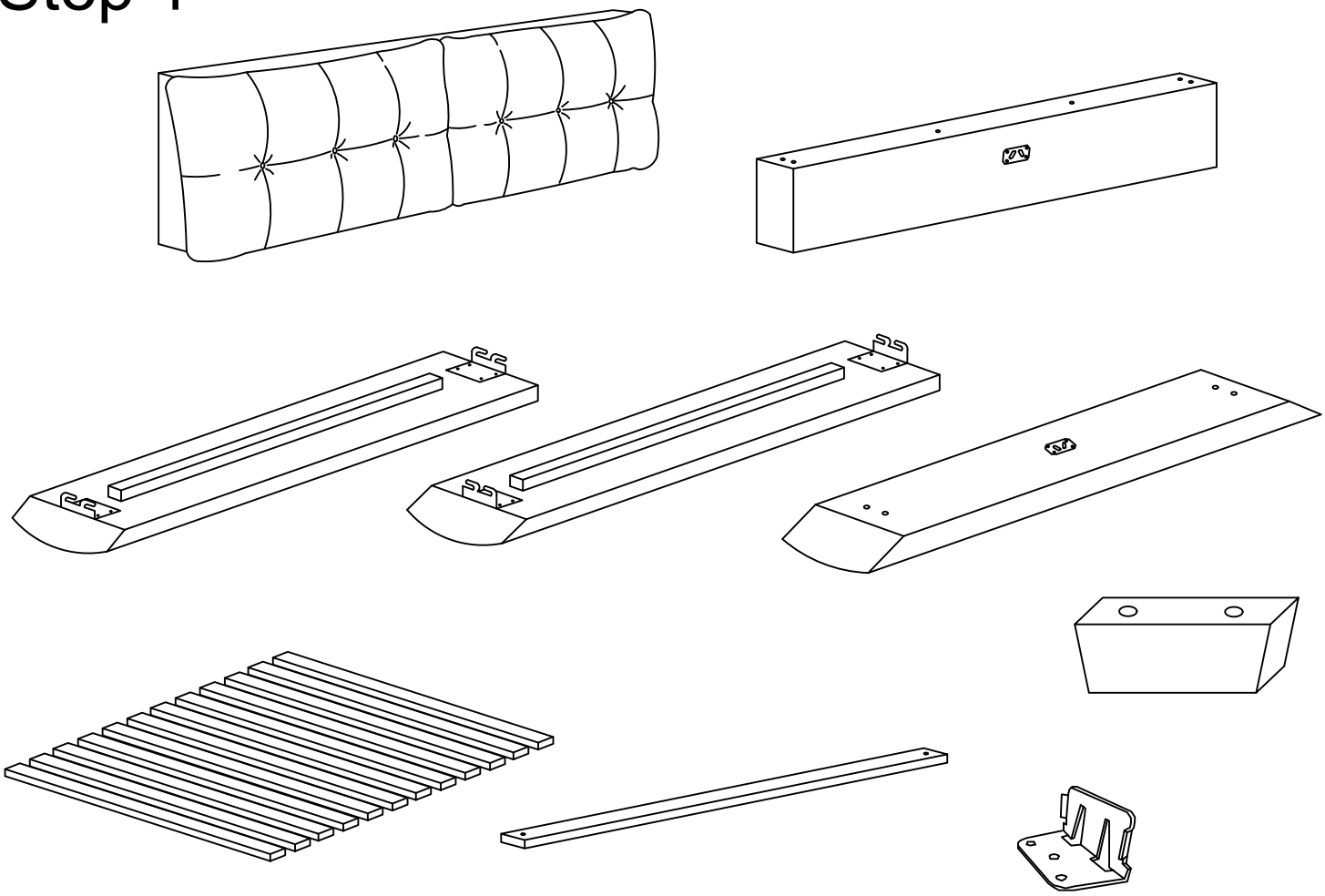

- Unpack and place all parts on a clean, non-marring surface.

Step 2

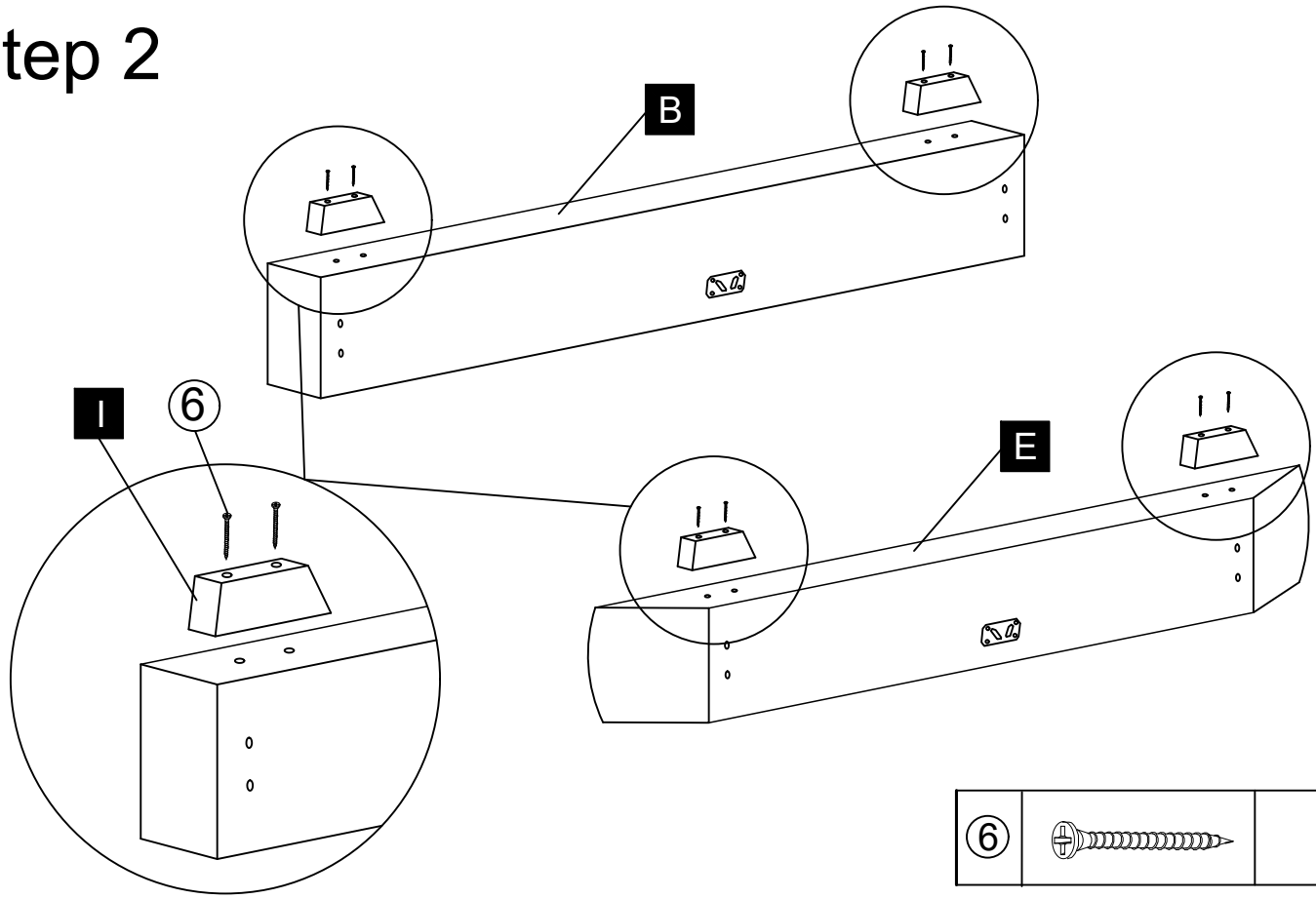

6		8

Step 3

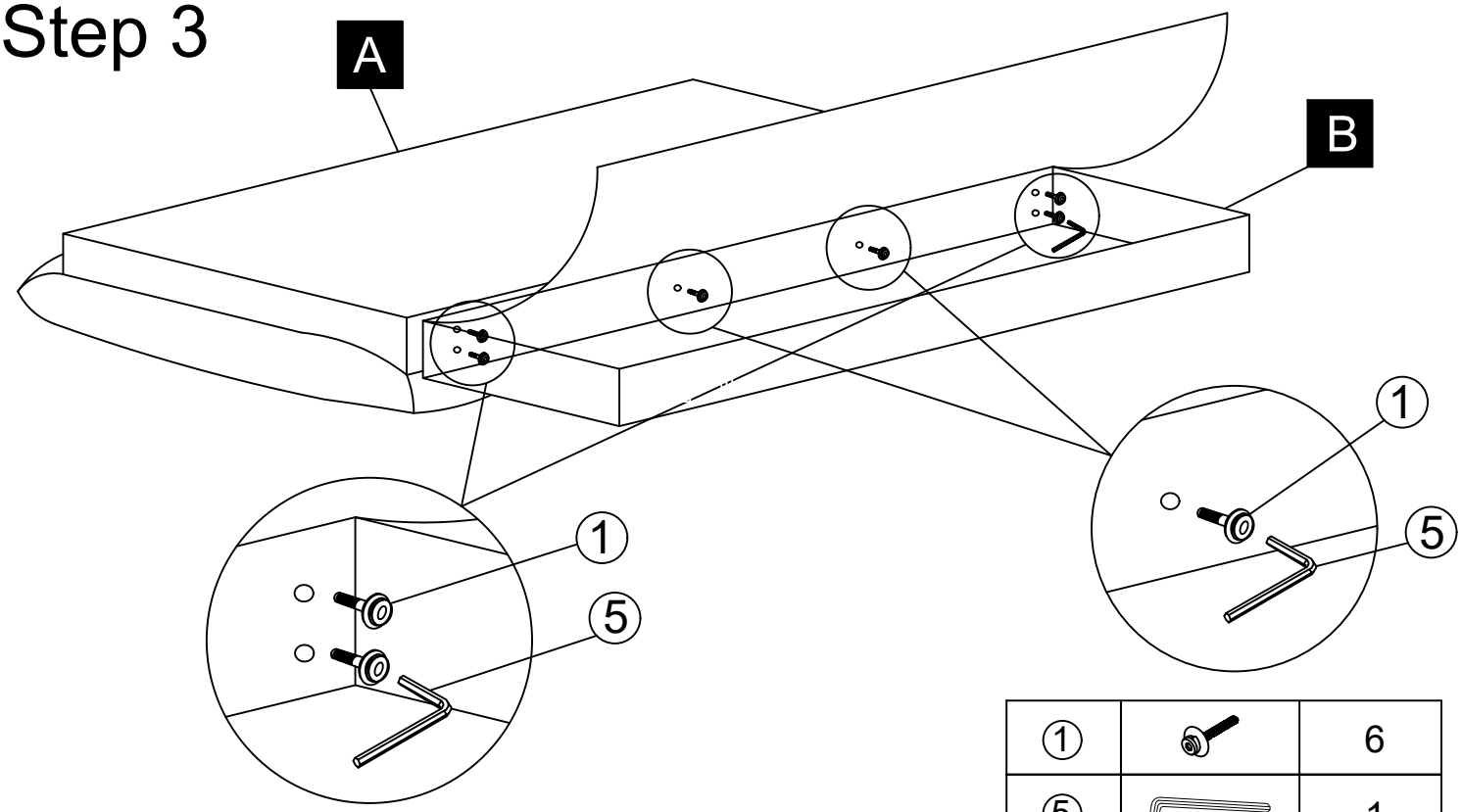

1		6
5		1

- Place the Upper Headboard (A) and Lower Headboard (B) as show in picture above.
- Open the black sheet behind the Lower Headboard (B) then align it with the Upper Headboard (A).
- Assemble Upper Headboard (A) and Lower Headboard (B) by using Bolt (1) and Allen Wrench M4 (5).

DO NOT FULLY TIGHTEN UNTIL THIS STEP COMPLETED

Step 4

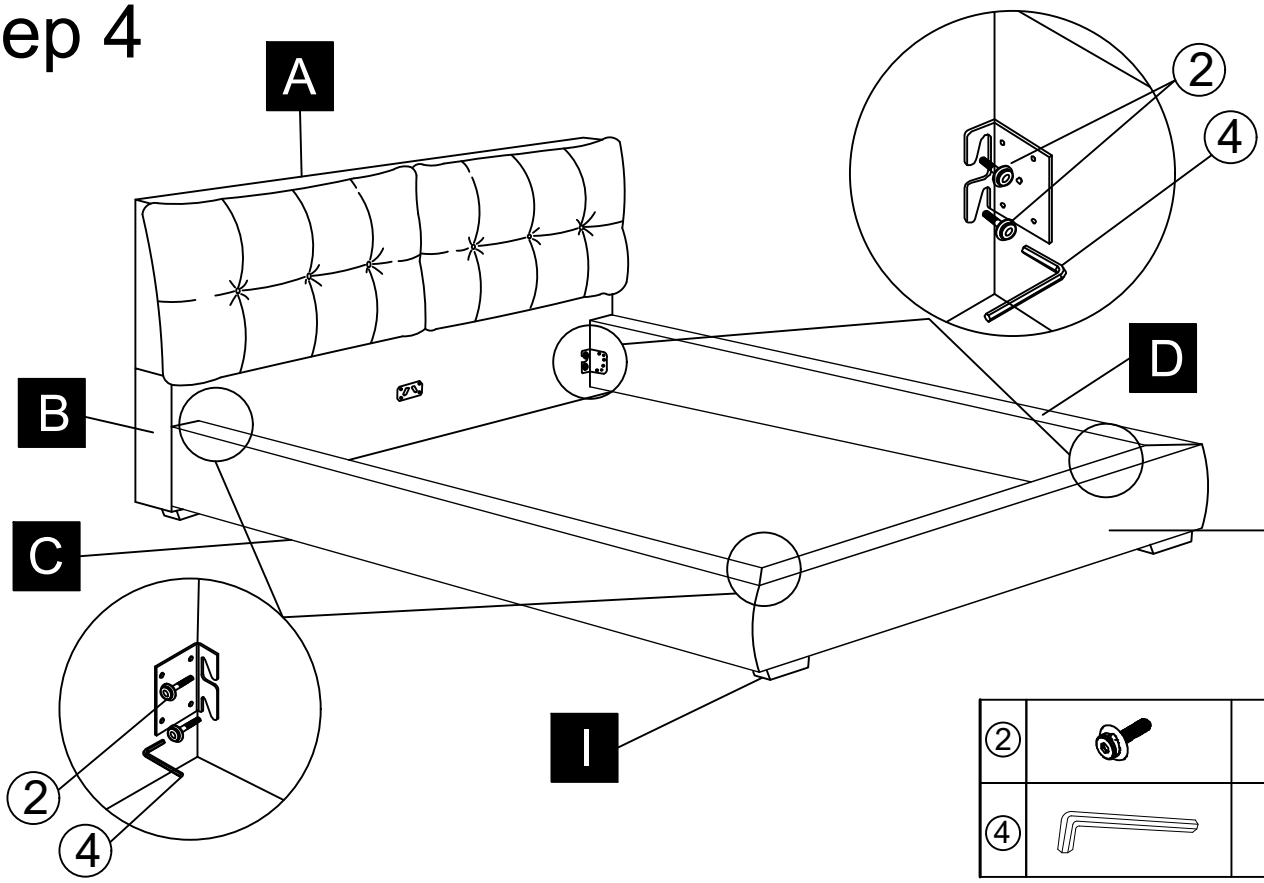

2		8
4		1

- Assemble Side rail (Left) (C) and Side Rail (Right) (D) to Lower Headboard (B) and footboard (E) by using bolts (2) and Allen Wrench M5 (4) as shown above.

DO NOT FULLY TIGHTEN UNTIL THIS STEP COMPLETED

Step 5

③		2
⑤		1

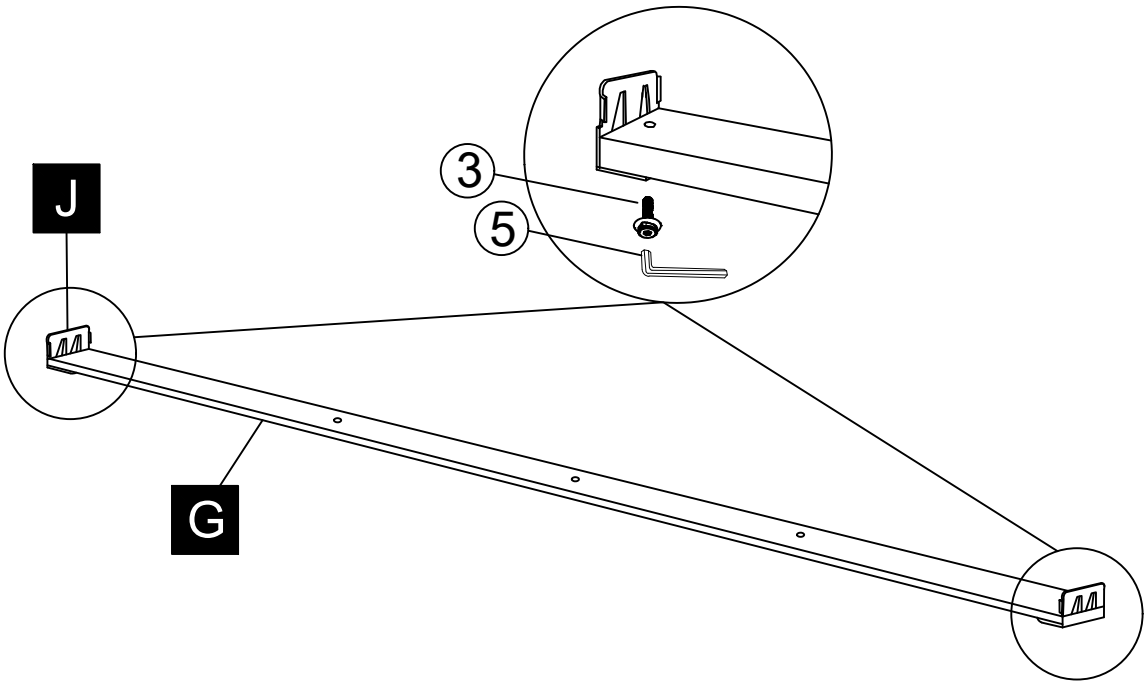

- Assemble center wood bracket (J) to center support (G) by using bolt (3) and Allen Wrench M4 (5).

Step 6

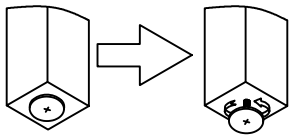

 # The Glides under the support legs can be adjusted later to keep the slats level on uneven surfaces.

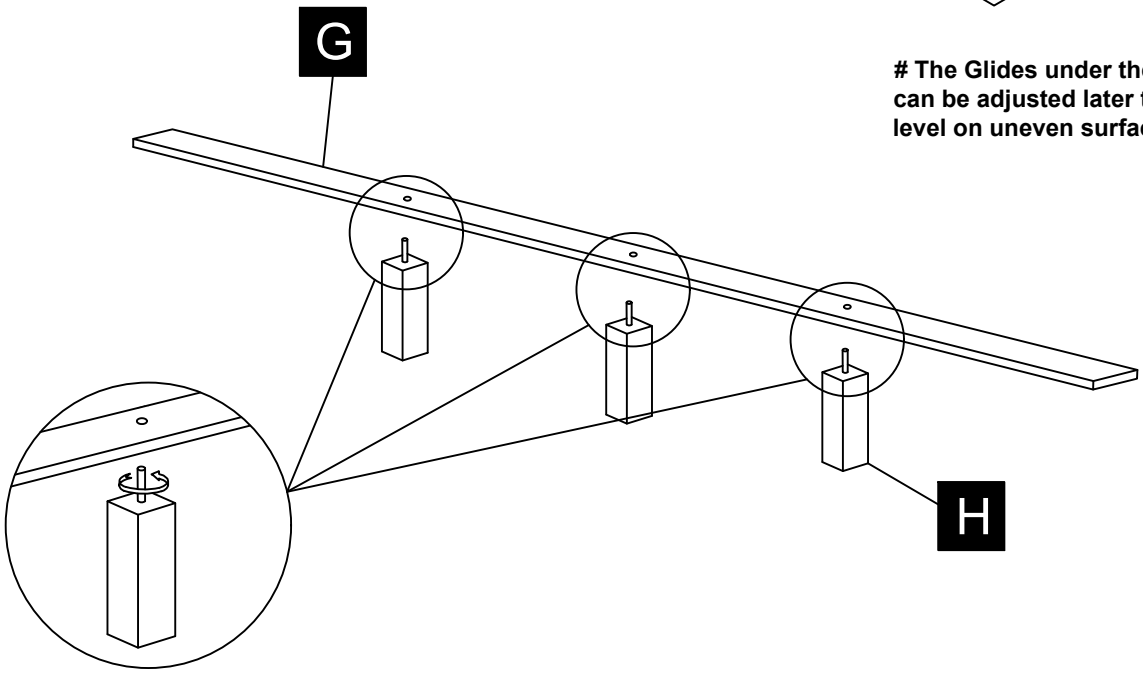

- Assemble support legs (H) to center support (G) as shown above.

Step 7

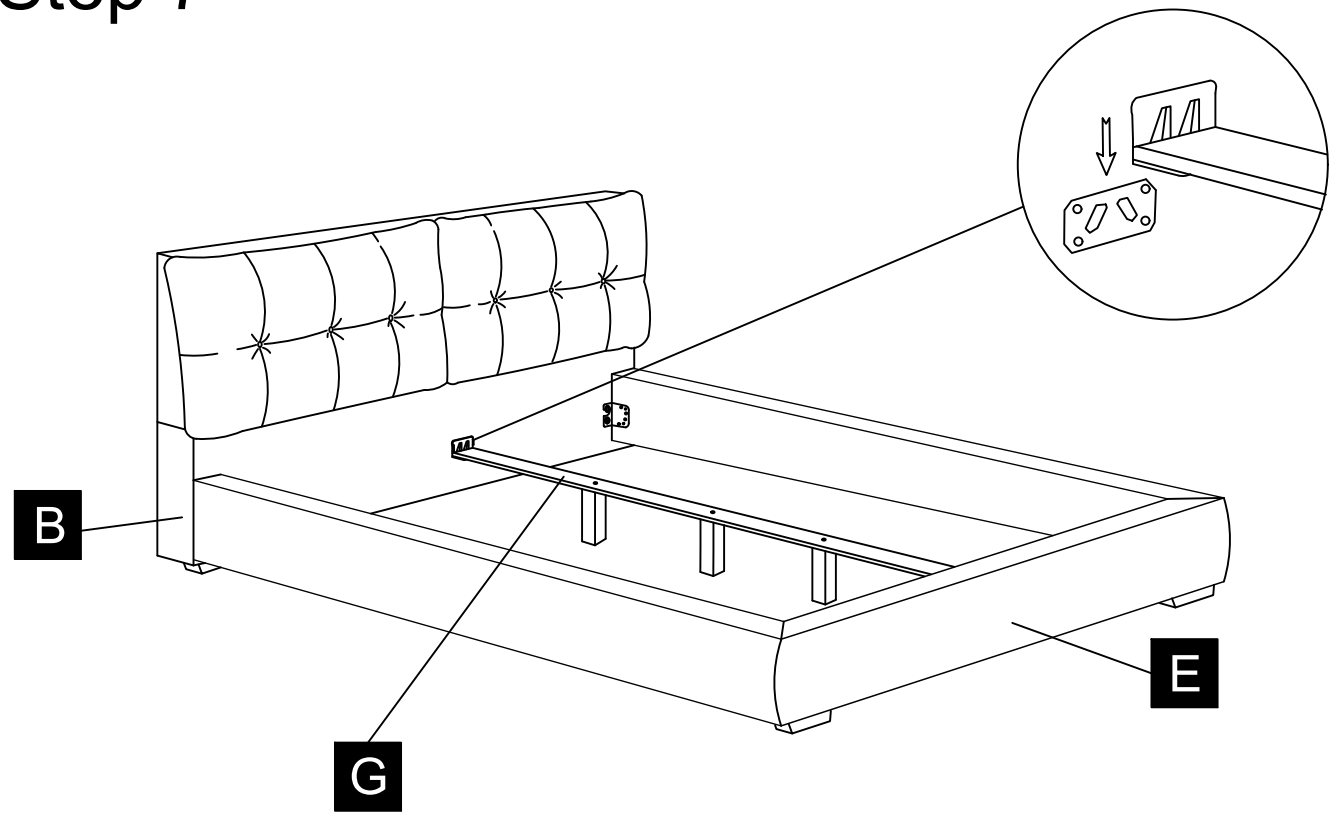

- Attach the center support (G) to Lower Headboard (B) and Footboard (E) as shown above.

Step 8

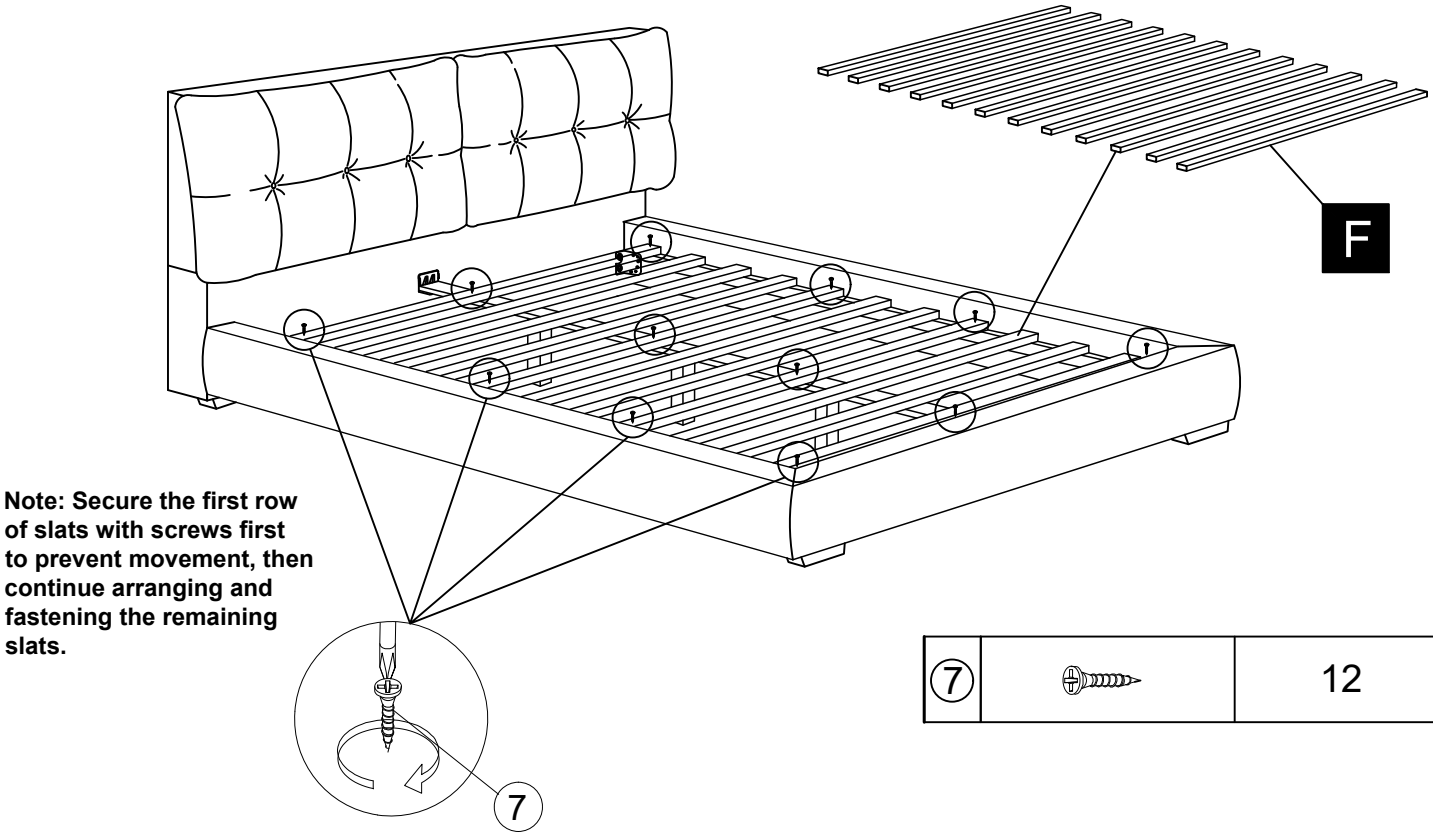

Note: Secure the first row of slats with screws first to prevent movement, then continue arranging and fastening the remaining slats.

7		12

- Put the slats (F) on top of the center support (G) then secure the slats (F) by using screw (7).

Completed:

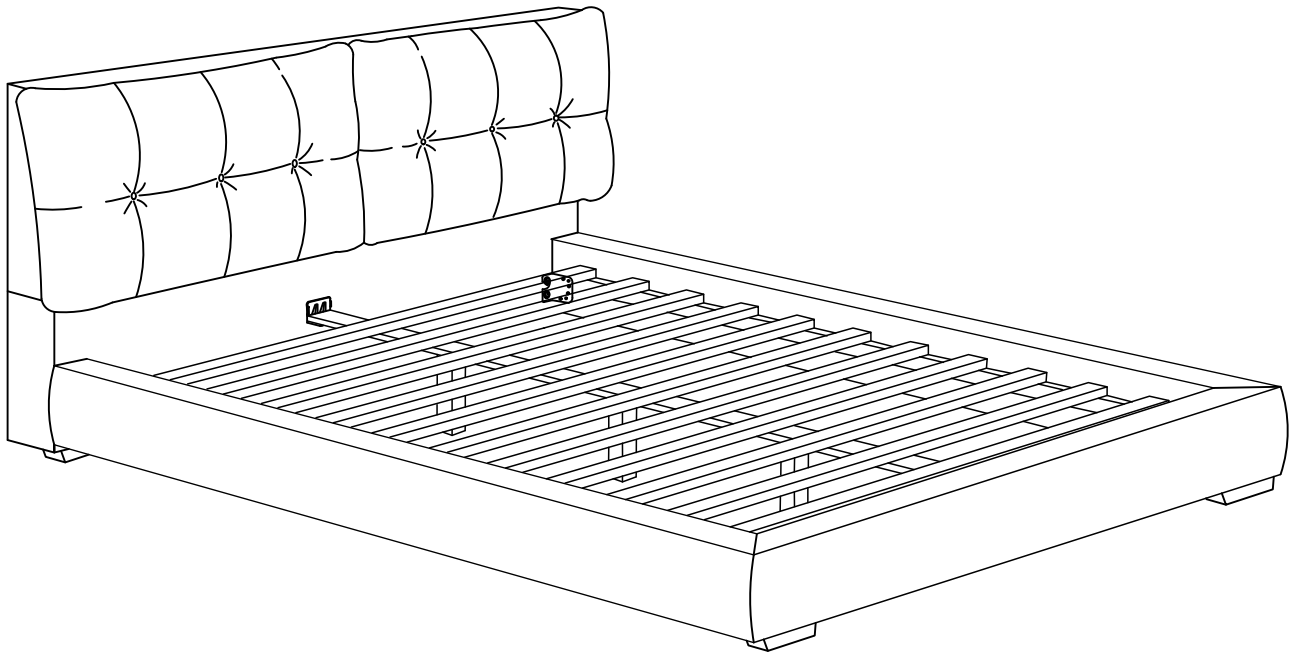

Place the Bed on a LEVEL SURFACE.
Inspect it and make sure all parts are adequately connected.
Don't push too hard, shake on the bed.
This would help to align all the parts at all the joint areas.

CAUTION 1: When tightening these screws, tighten sequentially.
DO NOT tighten any screw fully and then towards the next one.
This would cause the frame to warp.
If there is still wobbles, loosen the screws and execute this same process.
DO NOT tighten any screw fully and then towards the next one.
WARNING!! IF BED IS NOT STABLE, IT COULD LEAD TO DAMAGING THE PRODUCT.
Ensure all screws are fully locked into position.
The bed is ready to be used.

CAUTION 2: This bed can only be used on a flat, level surface.