# Assembly Instructions

Two-person assembly required

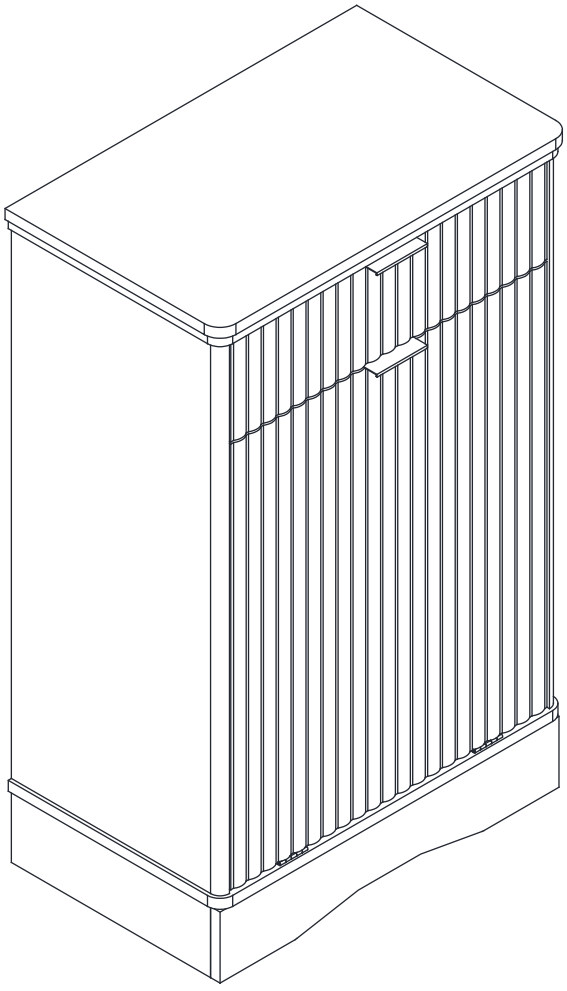

If you have any questions, please contact us

We will help you within 24 hours

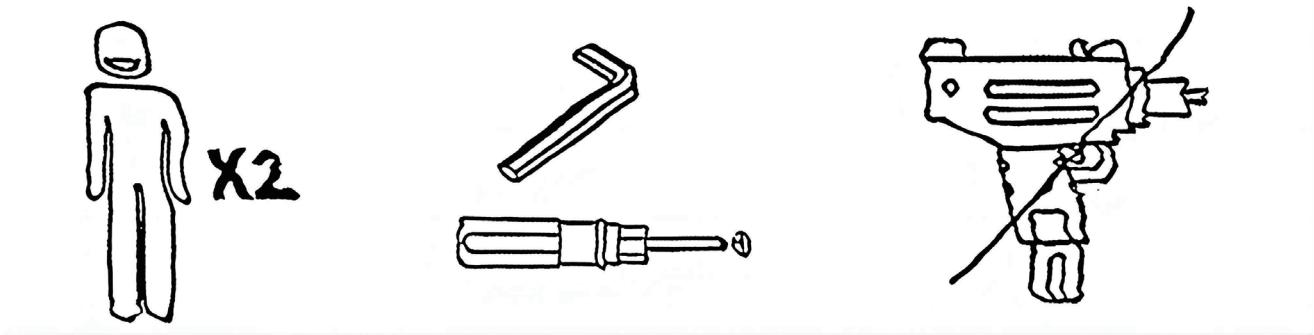


We recommend using hand tools for assembly.
If an electric screwdriver is used, reduce power and torque to avoid damage to the product.

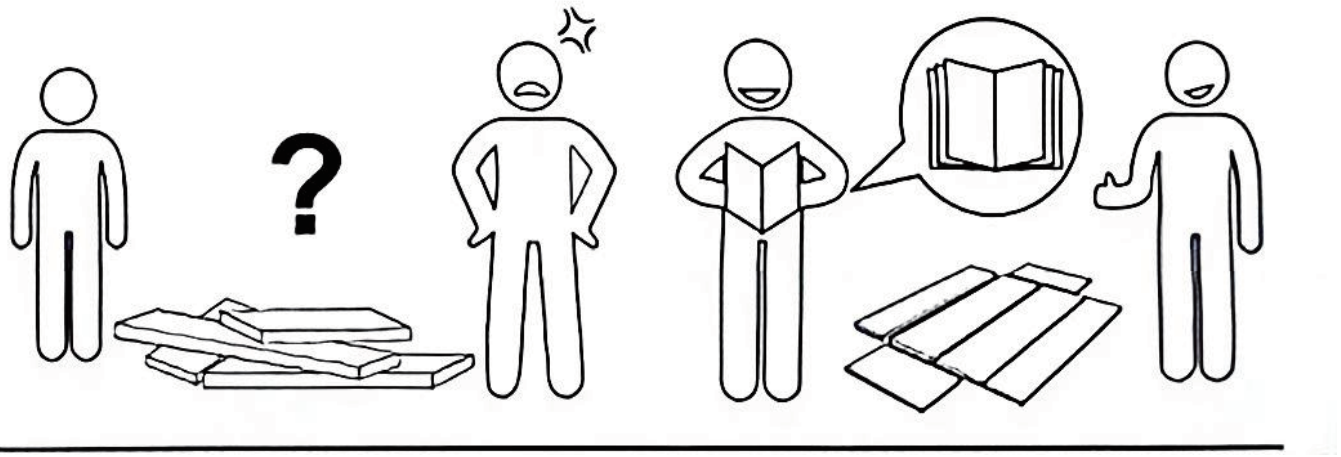


## Install the Anti-Tip Straps

Using the anti-tip straps can reduce the risk of tipping over, but can not eliminate it.

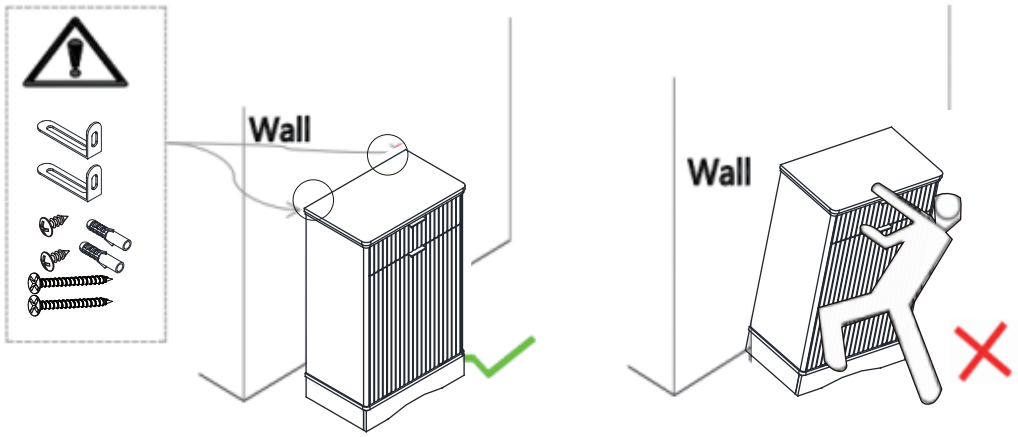

# Instructions For Fastening
# CAM-BOLT and CAM-LOCK



CAM-BOLT



CAM-LOCK

Tools Required

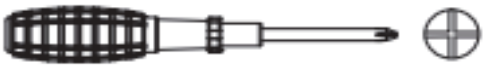

## INSERTING AND TIGHTENING CAM-BOLT

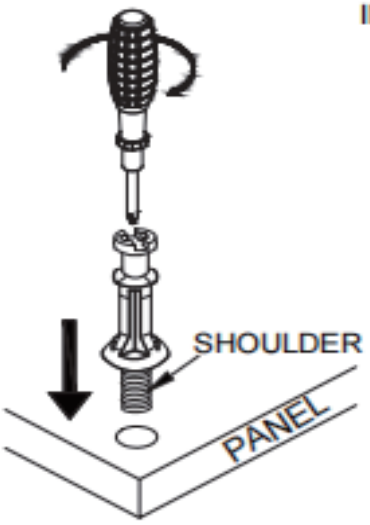


Place Cam-bolt on pre-drilled hole and screw in vertically

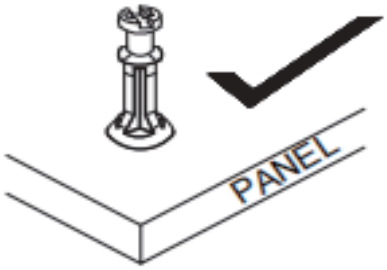


Shoulder is flushed (on the same level) with the panel.

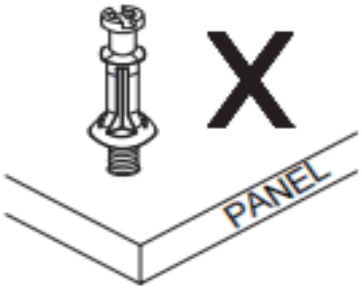


Shoulder is above the panel.

Place Cam-bolt on the designated pre-drilled holes on the panel. Use a Phillips Screwdriver to screw-in Cam-bolt vertically until shoulder is flushed (on the same level) with panel.

## INSERTING CAM-LOCK

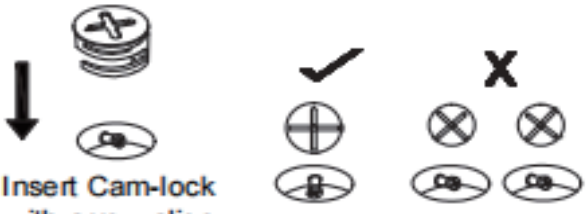


Insert Cam-lock with arrow align to Cam-bolt head

## TIGHTENING CAM-LOCK



Align the arrow on the Cam-lock to the Cam-bolt head and insert the Cam-lock. Ensure Cam-lock is fully inserted.

Use a Flat-head Screwdriver to turn Camlock clockwise so it locks onto the head of the Cam-bolt. Turn until it is snug (about 3/4ths of a turn) -- over-tightening could damage Cam-lock or/and Cam-bolt.

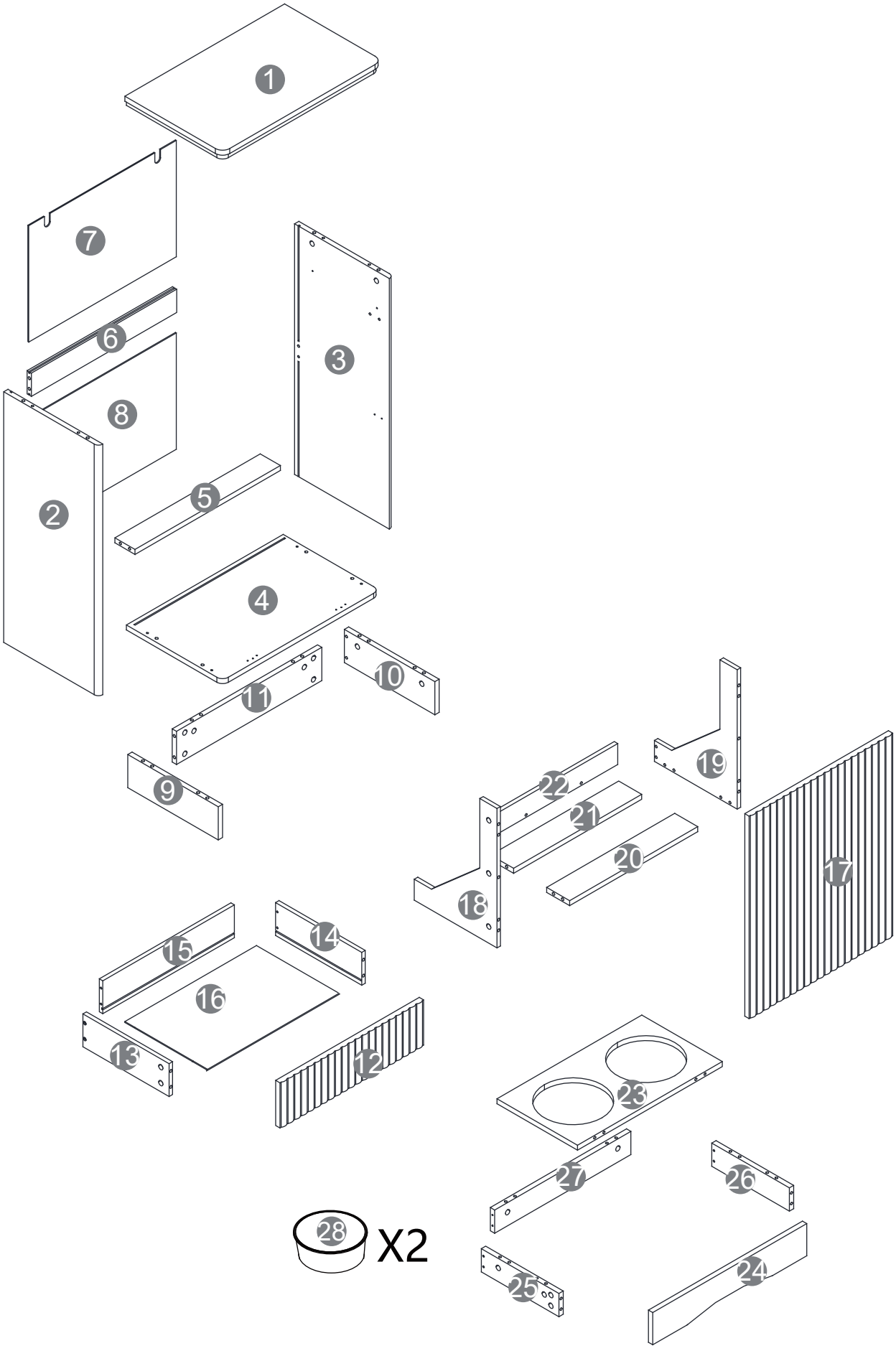
1
7
6
8
3
2
5
4
10
11
9
19
22
21
20
17
18
15
14
16
13
12
23
27
26
28
X2
25
24

| Item no. | Reference Image | Qty. |
|---|---|---|
| 1 | 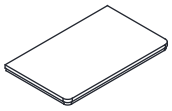 | X1 |
| 2 |  | X1 |
| 3 |  | X1 |
| 4 | 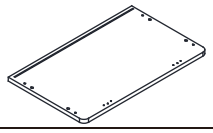 | X1 |
| 5 | 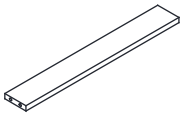 | X1 |
| 6 | 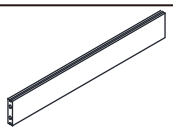 | X1 |
| 7 | 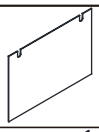 | X1 |
| 8 | 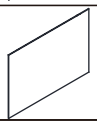 | X1 |
| 9 | 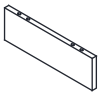 | X1 |
| 10 | 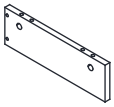 | X1 |
| 11 | 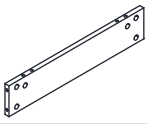 | X1 |
| 12 | 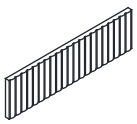 | X1 |
| 13 | 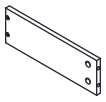 | X1 |
| 14 | 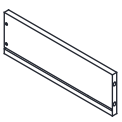 | X1 |

| Item no. | Reference Image | Qty. |
|---|---|---|
| 15 | 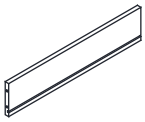 | X1 |
| 16 | 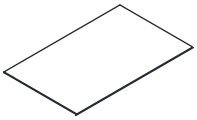 | X1 |
| 17 |  | X1 |
| 18 | 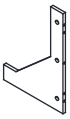 | X1 |
| 19 | 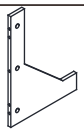 | X1 |
| 20 | 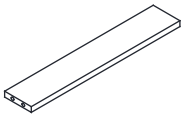 | X1 |
| 21 | 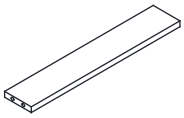 | X1 |
| 22 | 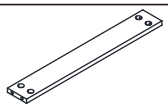 | X1 |
| 23 | 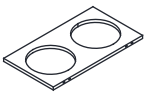 | X1 |
| 24 | 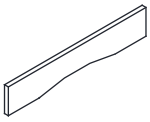 | X1 |
| 25 | 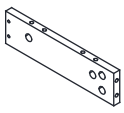 | X1 |
| 26 | 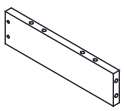 | X1 |
| 27 | 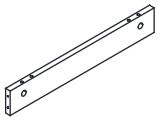 | X1 |
| 28 |  | X2 |

# Caution!!!

Make sure all parts are included.Most board parts are labeled or stamped on the raw edge.Contact us for free replacement if having damaged or missing parts.

| Item no. | Reference Image | Qty. |
|---|---|---|
| A | 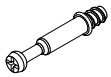 M6*35mm | X48 |
| B |  φ15*10mm | X48 |
| C |  φ8*30mm | X36 |
| D | 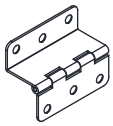 | X2 |
| E |  M3*12mm | X32 |
| F | 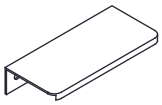 | X2 |
| G |  M3*10mm | X4 |
| H |  | X3 |
| I | 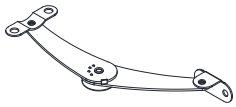 | X1 |
| J | 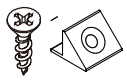 M3*14mm | X4 |

| Item no. | Reference Image | Qty. |
|---|---|---|
| K |  M4*35mm | X6 |
| L |  | X2 |
| M | 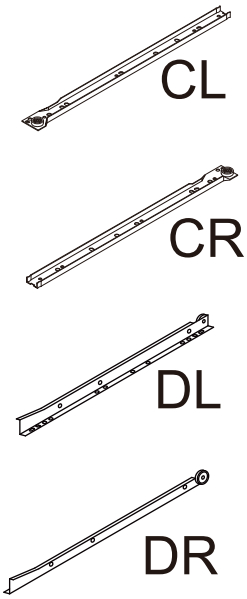 CL CR DL DR | X1 |
| N | 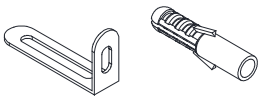 | X2 |
| O |  M4*25mm | X8 |

## Cam Lock Fastening System

This Cam Lock Fastening System will be used throughout the assembly process



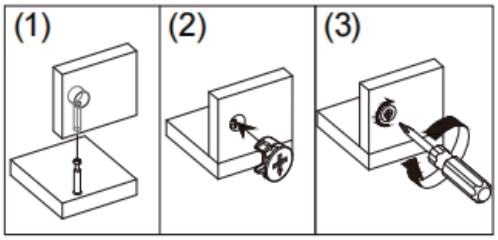

# step1:

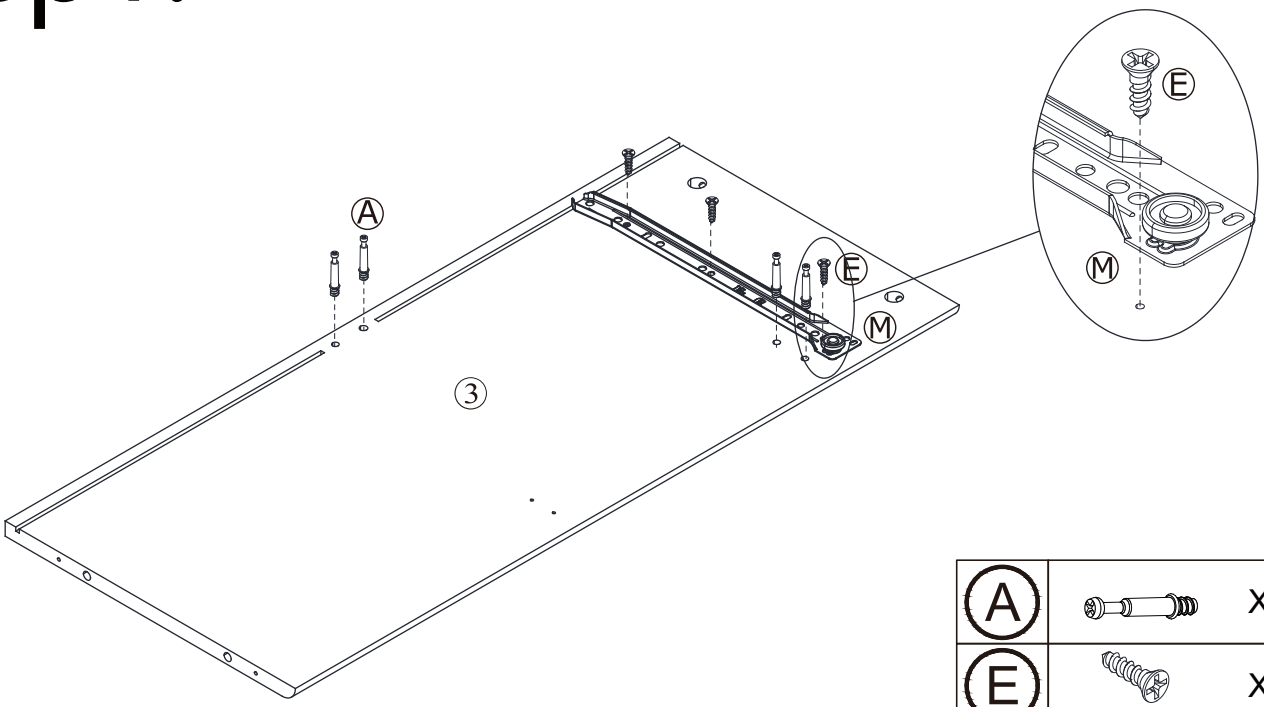


| | | |
|---|---|---|
| Ⓐ |  | X 4 |
| Ⓔ |  | X 3 |
| Ⓜ | CR  | X 1 |

# step2:

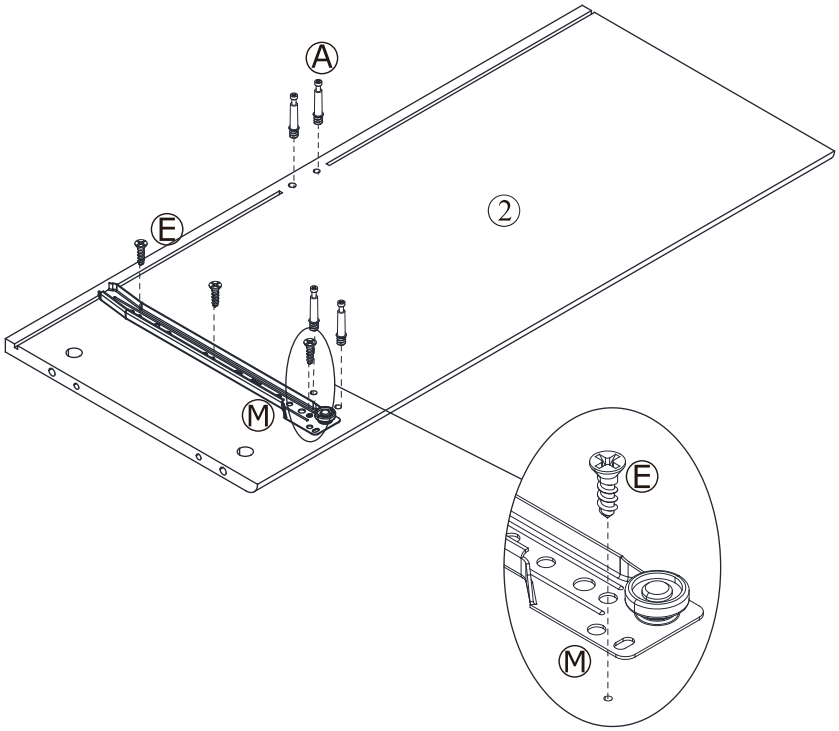


| | | |
|---|---|---|
| Ⓐ | 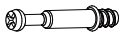 | X 4 |
| Ⓔ |  | X 3 |
| Ⓜ | CL 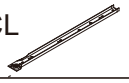 | X 1 |

# step3:

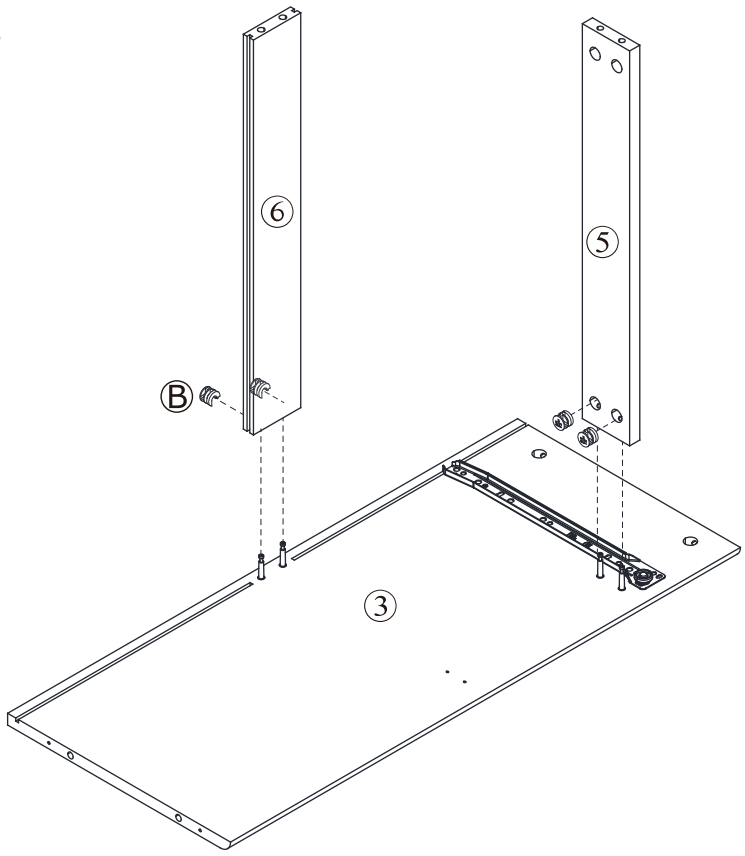


| | | |
|---|---|---|
| B |  | X 4 |

# step4:

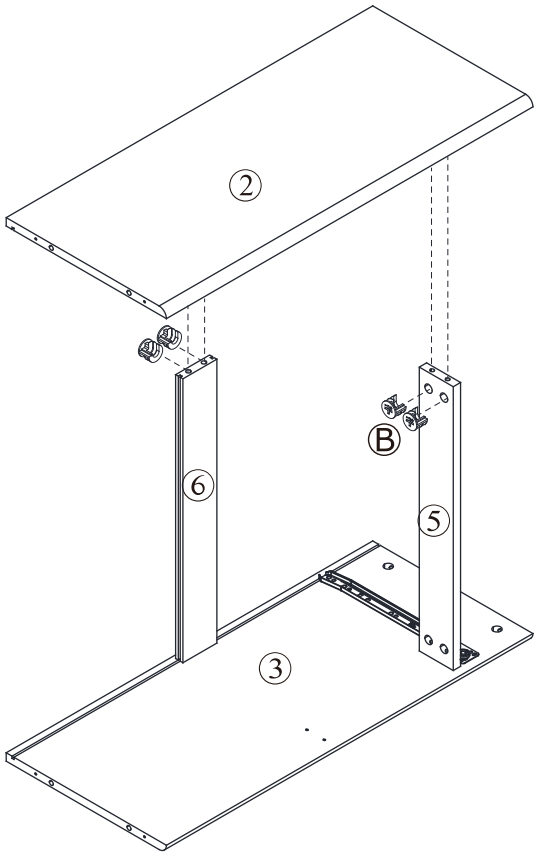


| | | |
|---|---|---|
| B |  | X 4 |

# step5:

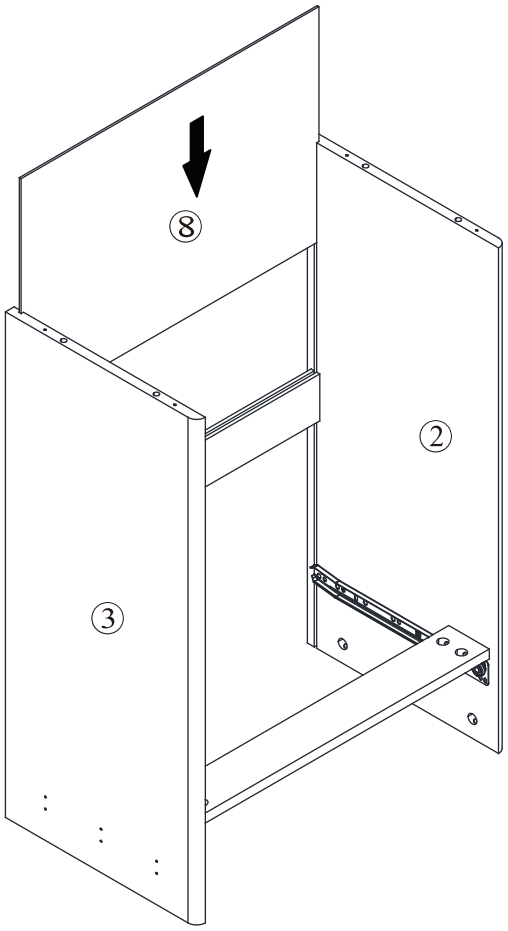


# step6:

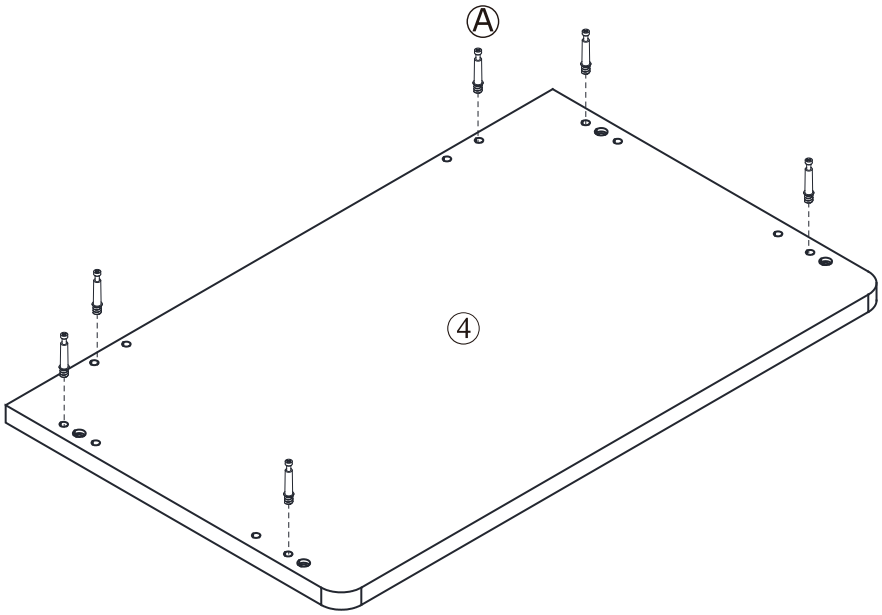


| | |
|---|---|
| Ⓐ | X 6 |

# step7:

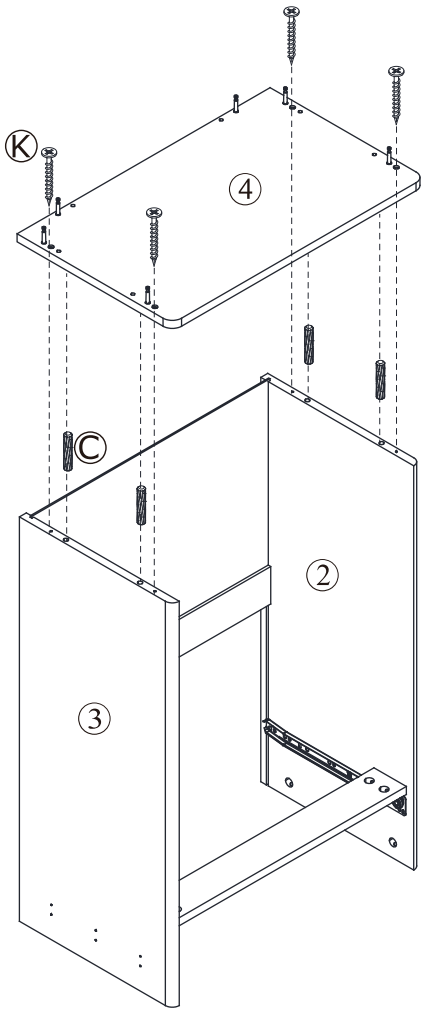


| | | |
|---|---|---|
| C | 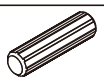 | X 4 |
| K |  | X 4 |

# step8:

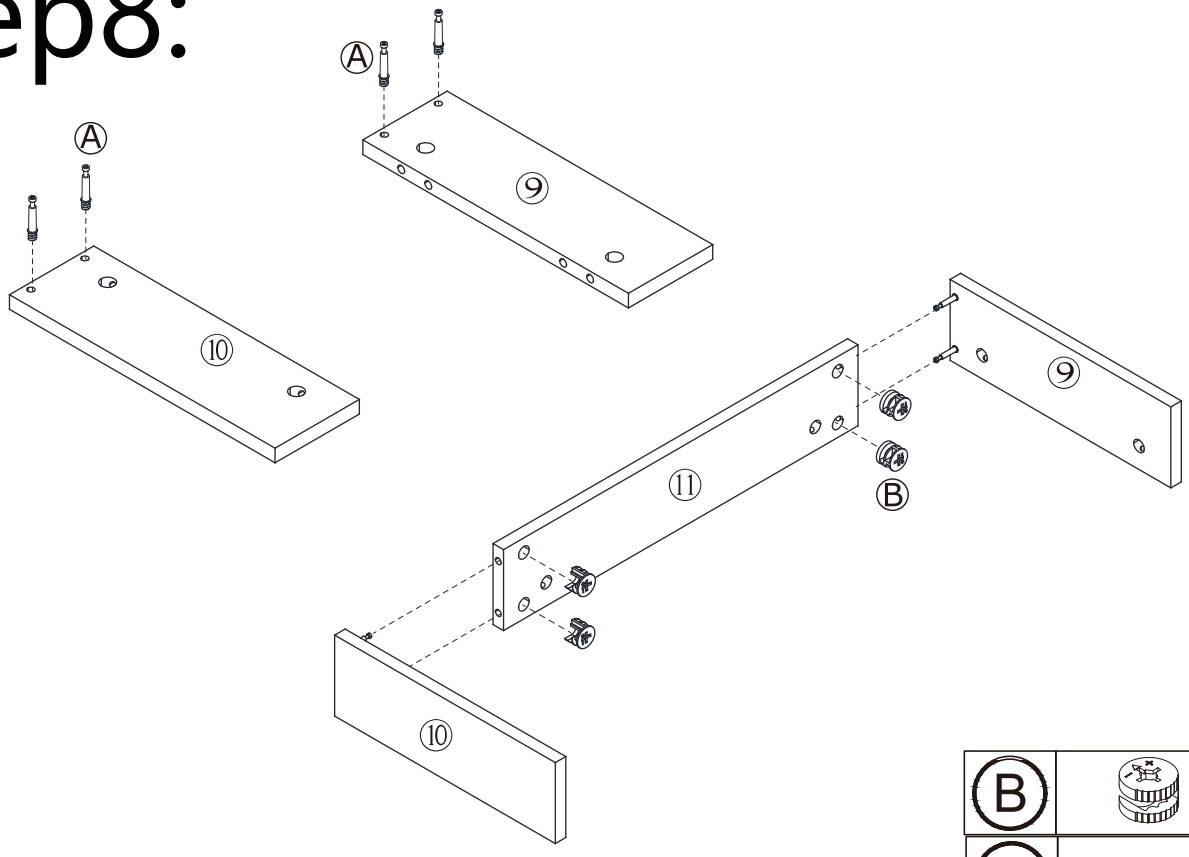


| | | |
|---|---|---|
| B |  | X 4 |
| A | 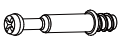 | X 4 |

# step9:

| | | |
|---|---|---|
| B |  | X 6 |
| C | 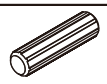 | X 6 |

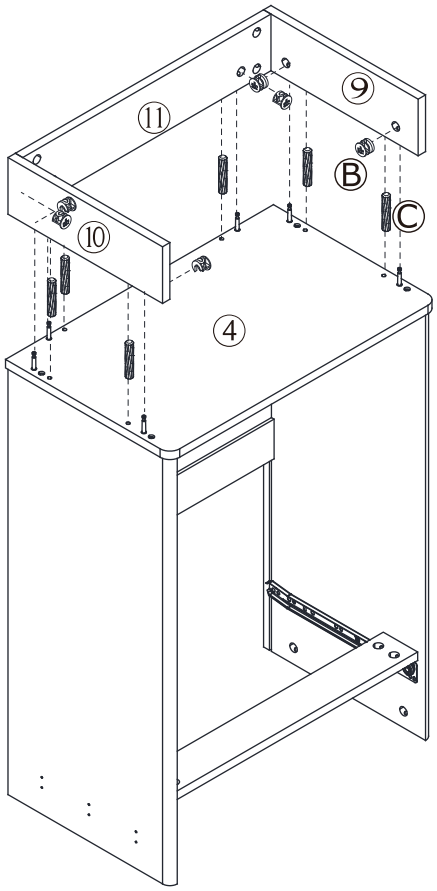


# step10:

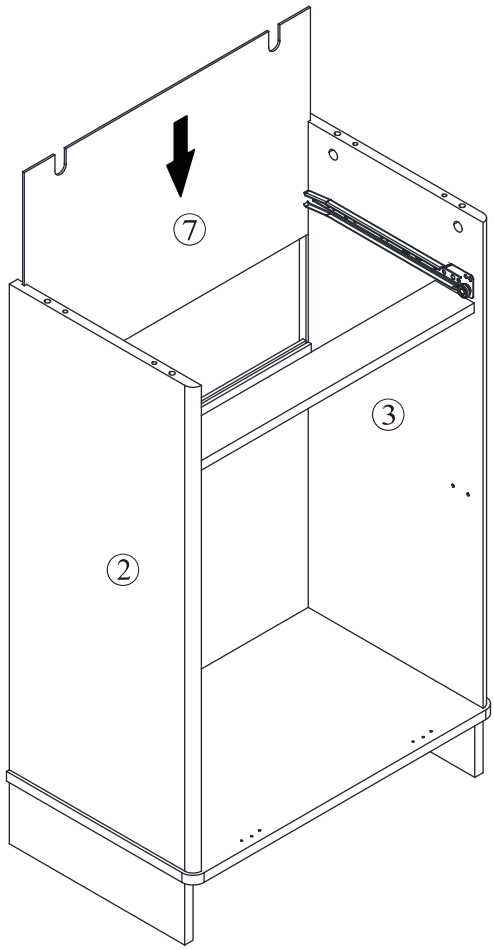

# step11:

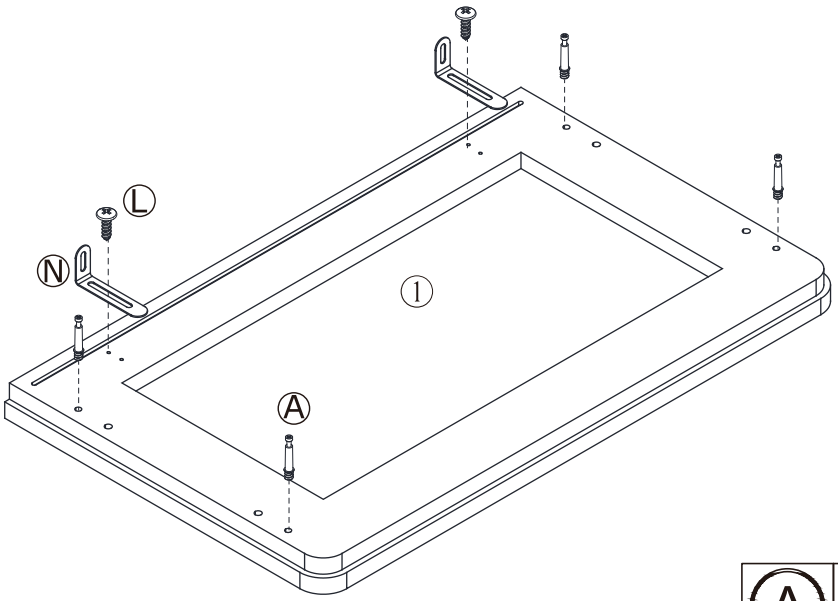


| | | |
|---|---|---|
| A | 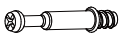 | X 4 |
| L |  | X 2 |
| N |  | X 2 |

# step12:

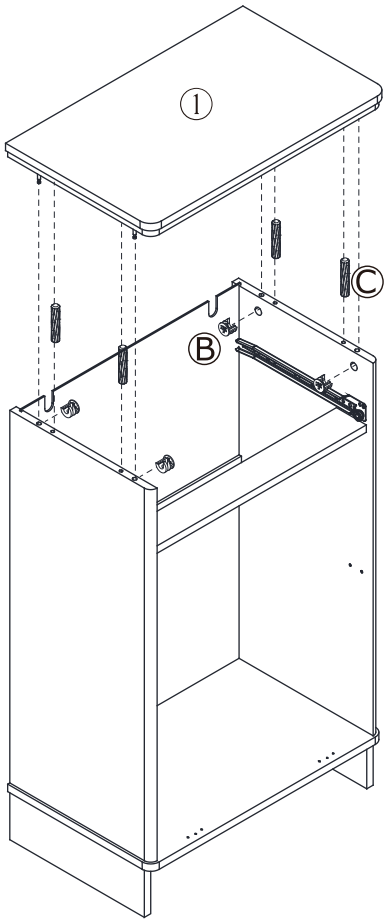


| | | |
|---|---|---|
| B |  | X 4 |
| C |  | X 4 |

# step13:

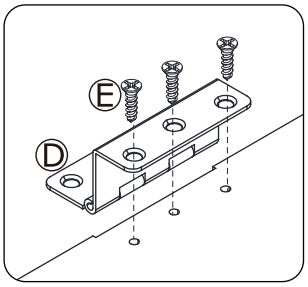


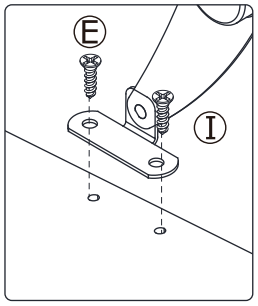


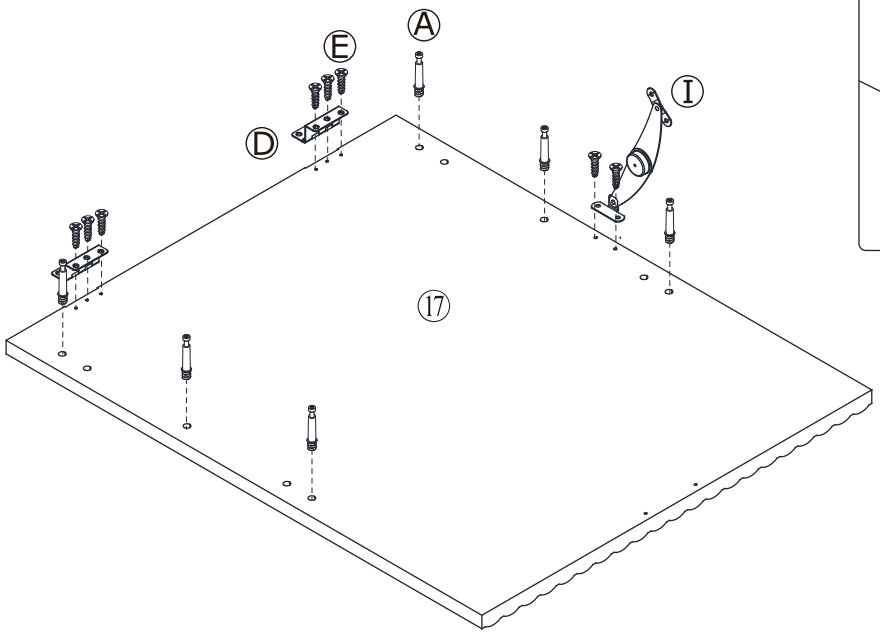


| | | |
|---|---|---|
| I | 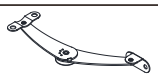 | X 1 |
| A | 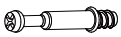 | X 6 |
| E |  | X 8 |
| D |  | X 2 |

# step14:

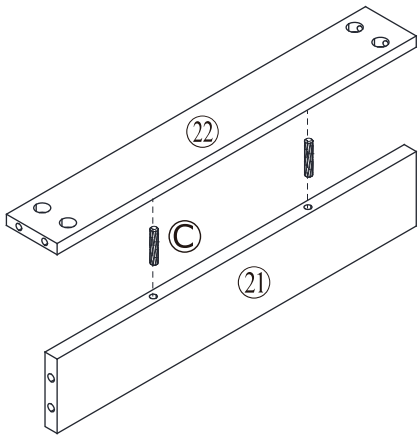


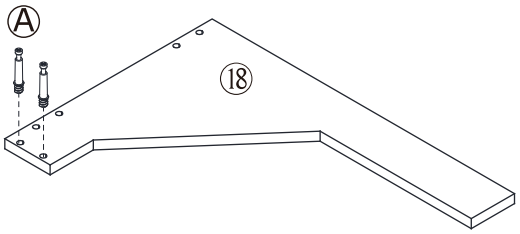


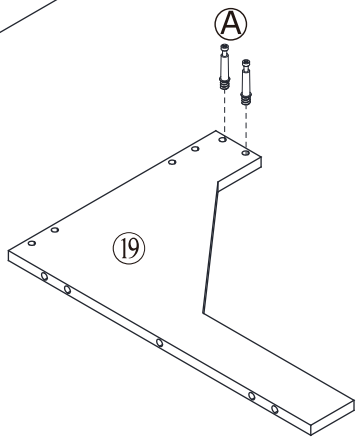


| | | |
|---|---|---|
| A | 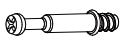 | X 4 |
| C |  | X 2 |

# step15:

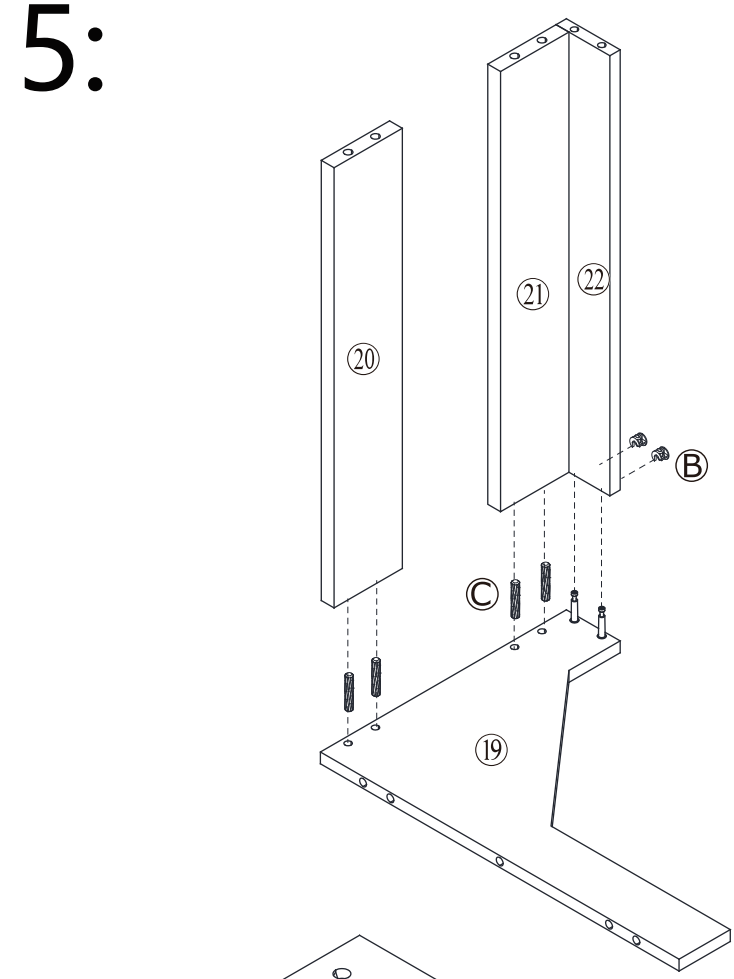


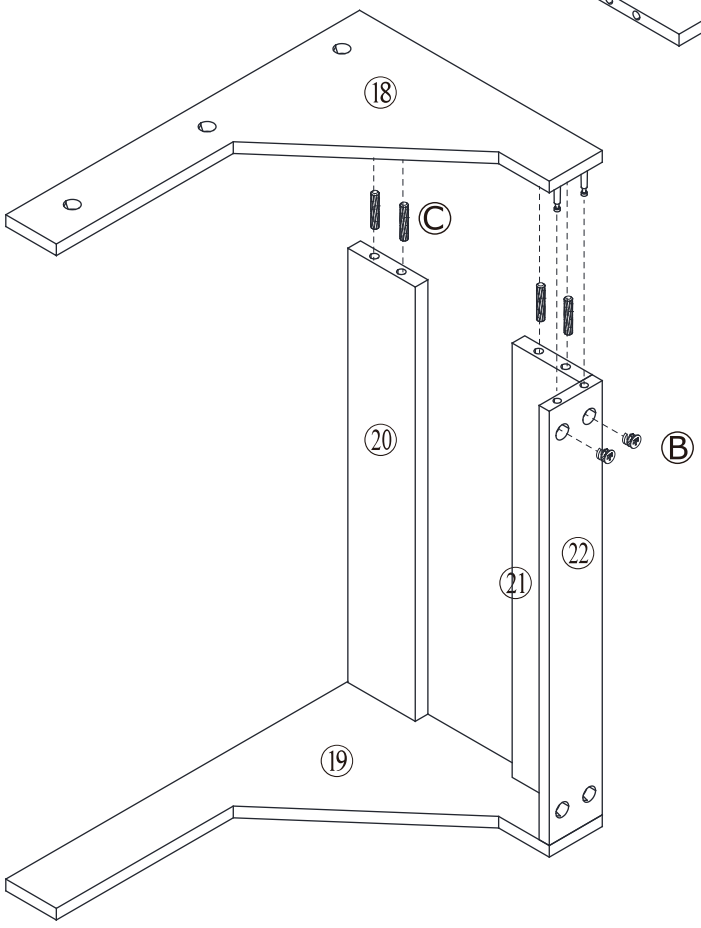


| | | |
|---|---|---|
| B |  | X 4 |
| C |  | X 8 |

# step16:

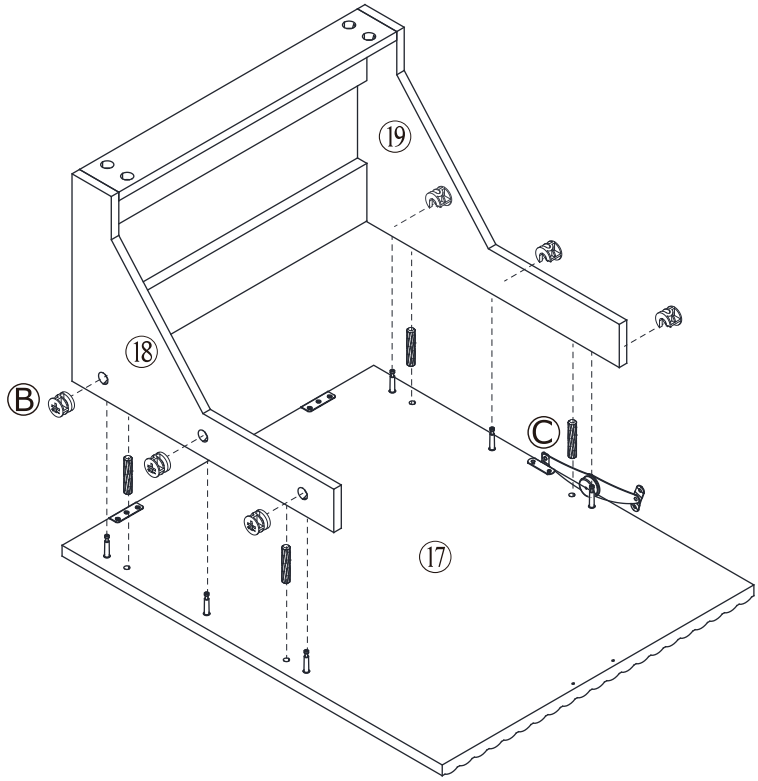


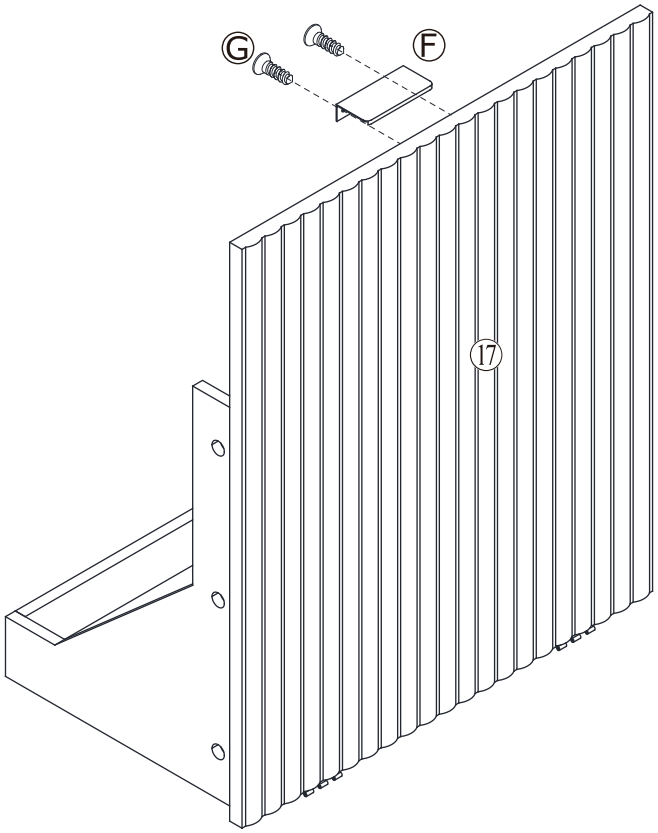


| | | |
|---|---|---|
| Ⓑ |  | X 6 |
| Ⓒ |  | X 4 |
| Ⓕ | 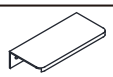 | X 1 |
| Ⓖ |  | X 2 |

# step17:

| | | |
|---|---|---|
| J |  | X 4 |
| E |  | X 6 |
| H |  | X 3 |




# step18:

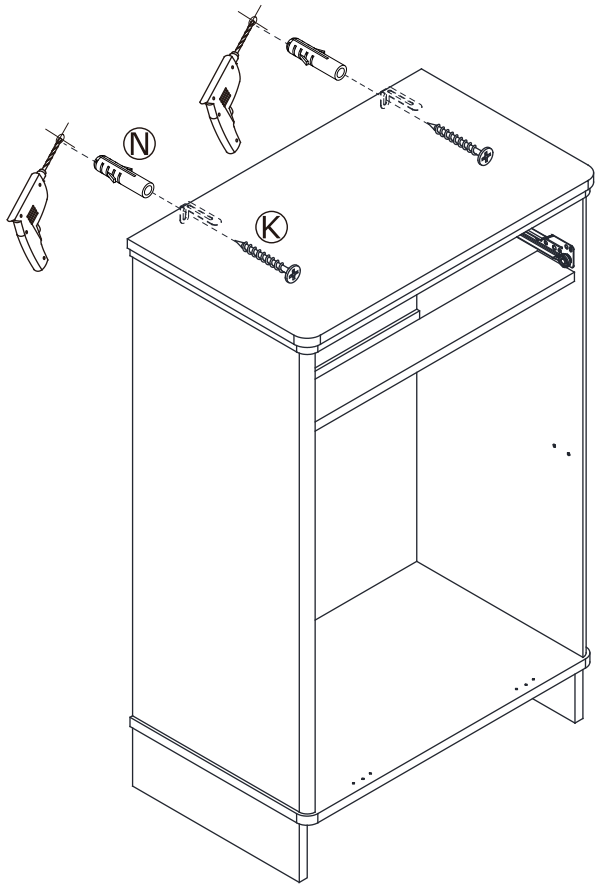


| | | |
|---|---|---|
| N |  | X 2 |
| K |  | X 2 |

| | |
|---|---|
| Ⓔ | X 6 |

# step19:

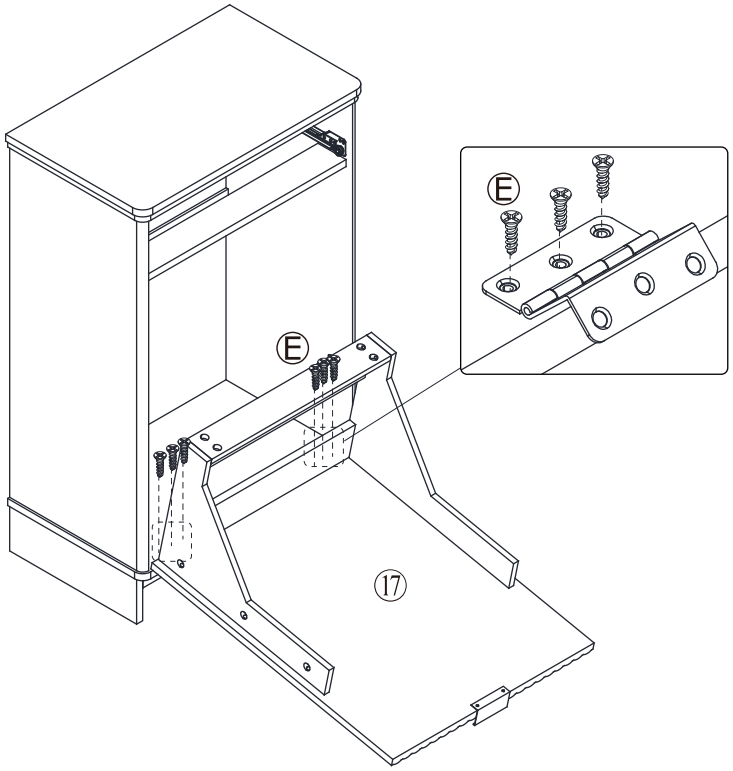


# step20:

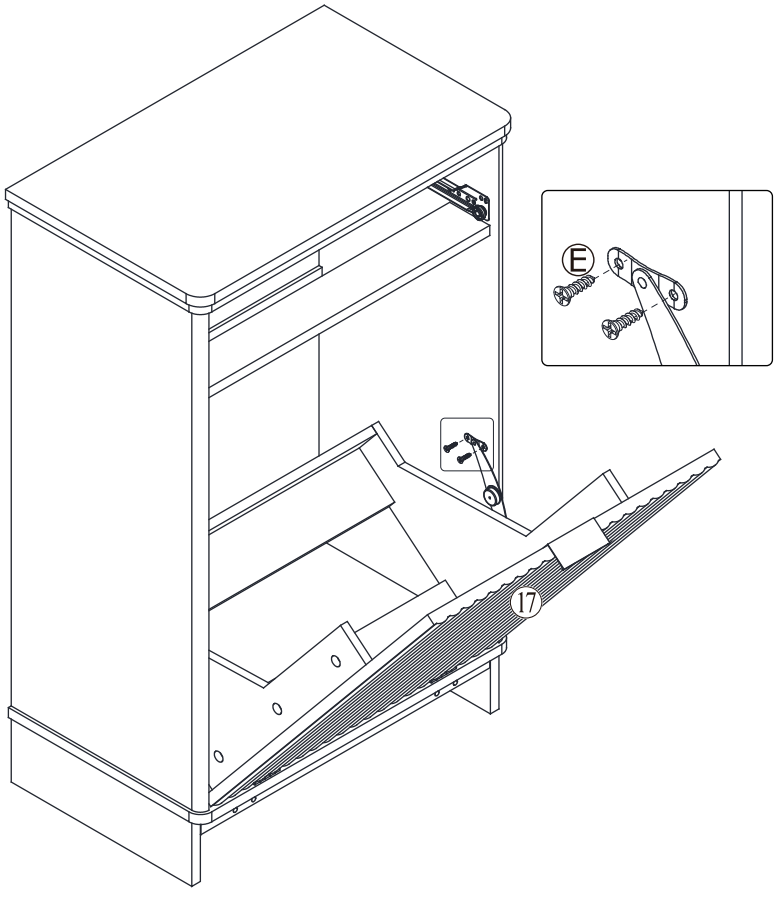


| | |
|---|---|
| Ⓔ | X 2 |

# step21:

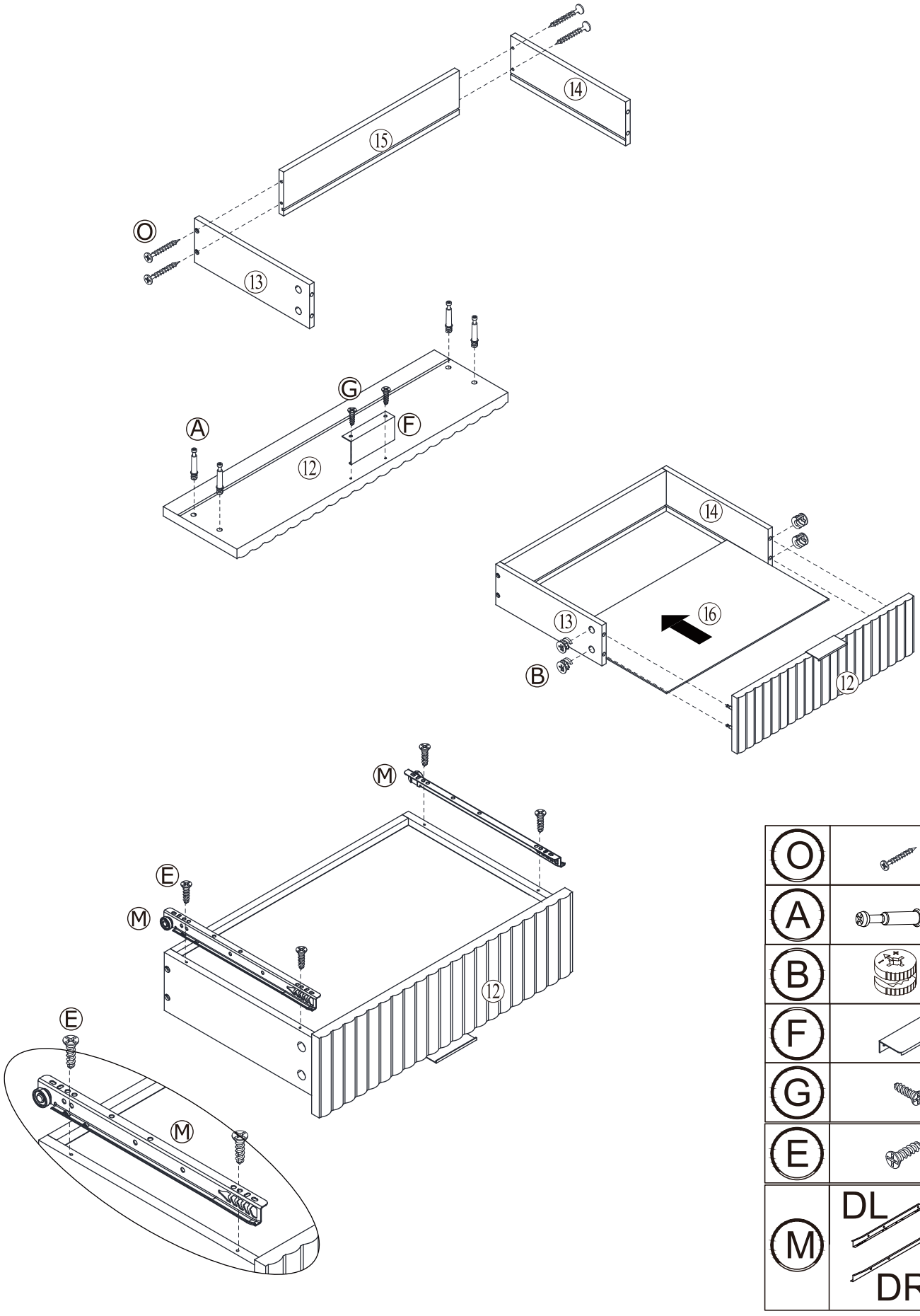


| | | |
|---|---|---|
| O |  | X 4 |
| A |  | X 4 |
| B |  | X 4 |
| F |  | X 1 |
| G |  | X 2 |
| E |  | X 4 |
| M |  DL DR | X 1 |

# step22:

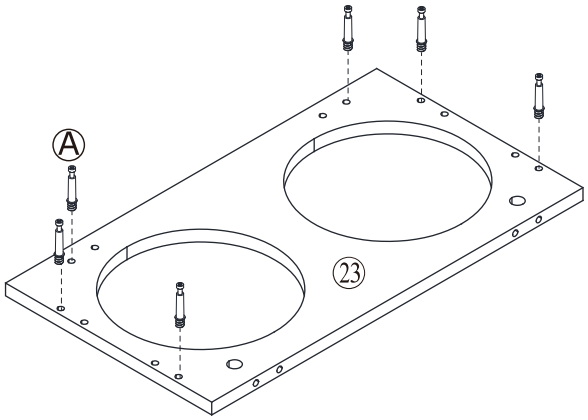


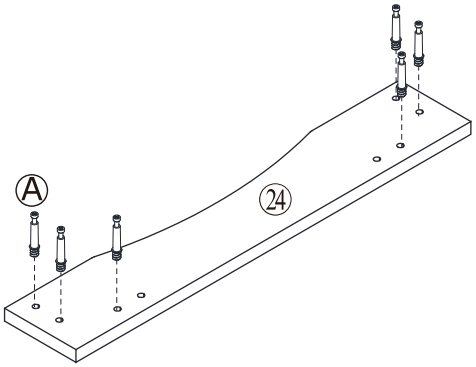


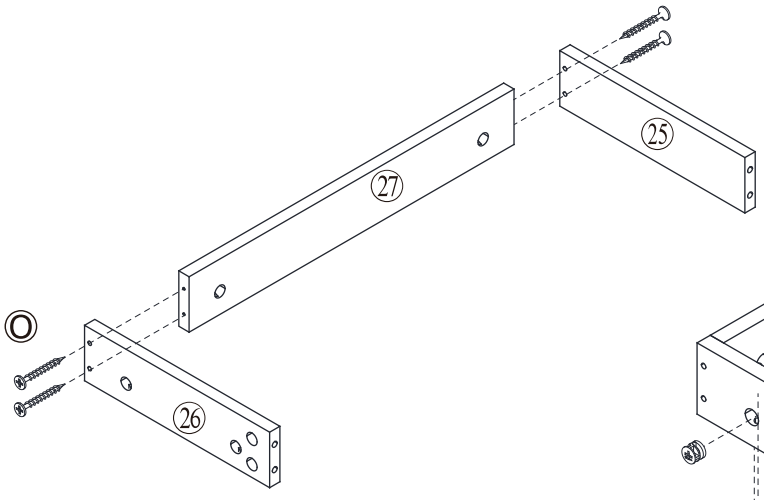


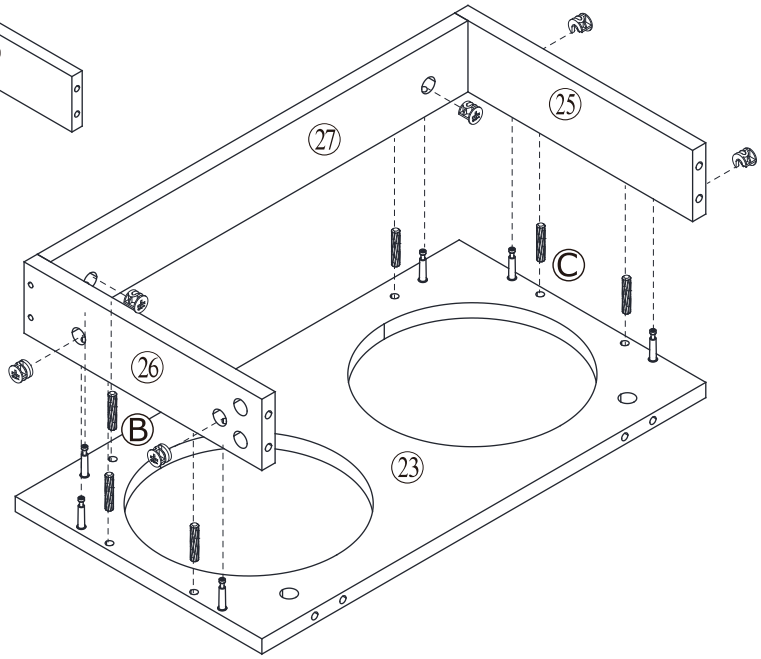


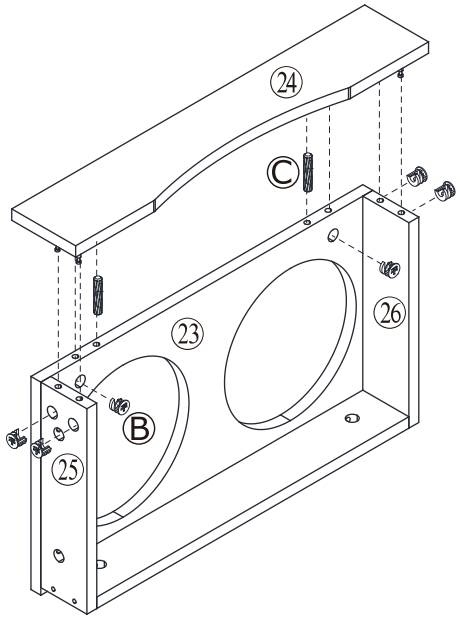


| | | |
|---|---|---|
| O |  | X 4 |
| A | 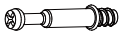 | X 12 |
| B |  | X 12 |
| C |  | X 8 |

# step23:

