ASSEMBLY INSTRUCTIONS

Thank you for purchasing this quality Product. Be sure to check all packing material carefully for small parts, which may have come loose inside carton during shipment. idenlify and count all parts and compare with the parts list below.



ASSEMBLY INSTRUCTION:

1. Remove hadware from box and sort by size.
2. Please check to see that all hardware and parts are present prior start of assembly.
3. Please follow attached instruction in the sme sequence as numbered asure fast and aesy assemblly.

WARNING!

1. Dont attempt to repair or modify parts that are proken or defective. Prease contact the store immediately.
2. This productis for home use only and not intended for commercial esatablishments.
3. Two persons are required for assembly.
4. Approximate assembly time 1/2 hours.
5. Component parts and fittings contained in the box. Prease sort out all parts before you begin to assemble the item. This is to make sure you always use the correct part.
6. It is STRONGLY RECOMMENDED that you ANCHOR this product.toling furniture can cause serious injuries and death. To prevent your furniture from tipping forward it is strongly recommended that you securely attach this product to a wallr other solid surface, using the anchor straps provided appropriate fixings.

No.	Component		Q'ty
A	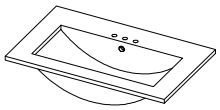	Sink	1
B	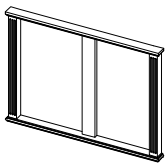	Front side - top	1
C	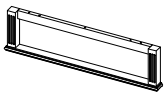	Front side - bottom	1
D	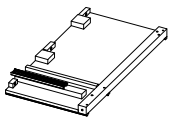	Side panel - Left	1
E	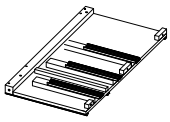	Side panel - right	1
F	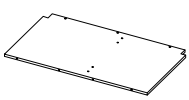	Bottom	1
G		Back panel - top	1
H	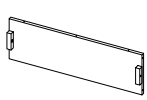	Back panel - bottom	1

No.	Hardware		Q'ty
1		Allen Bolts 1/4"x35	10
2		Cam lock screws	5
3		Cam lock	5
4		Wooden	45
5		Handle	4
6		Knot	1
7		Screws M4x25	9
8		Screws 4x25	27
9		Allen key	1
10	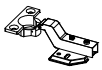	Hinges	2
11		Screws 4x15	12
12		Angle Bracket	2
13		Screws 4x15	8
14	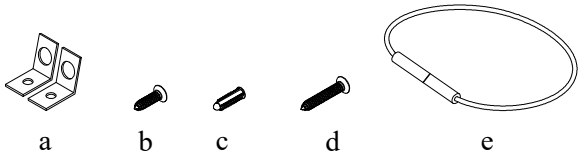 a b c d e Wall brackets 1 set		
	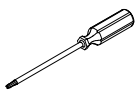	Not included	

No.	Component		Q'ty
I		Middle panel	1
J	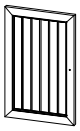	Door	1
K		Drawer Front (Double)	1
L		Drawer Front (Singel - small)	1
M		Drawer Front (Singel - big)	1
N	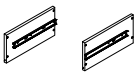	Drawer side (R/L)	2
O		Drawer back	1
P	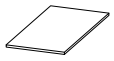	Drawer bottom	2
Q	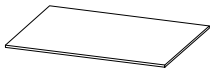	Drawer bottom	1
S	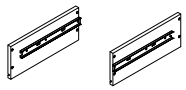	Drawer side (R/L)	4
X		Drawer back	1
Y	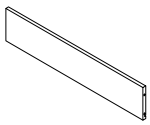	Drawer back	1
Z	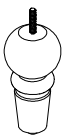	Leg	4

STEP 1

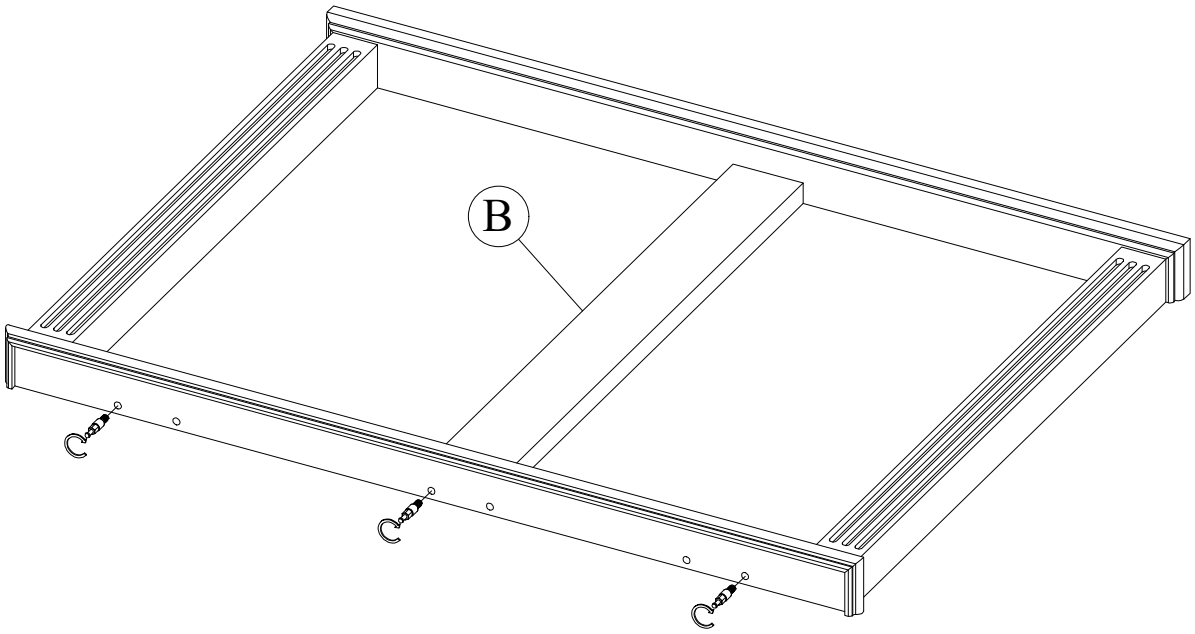

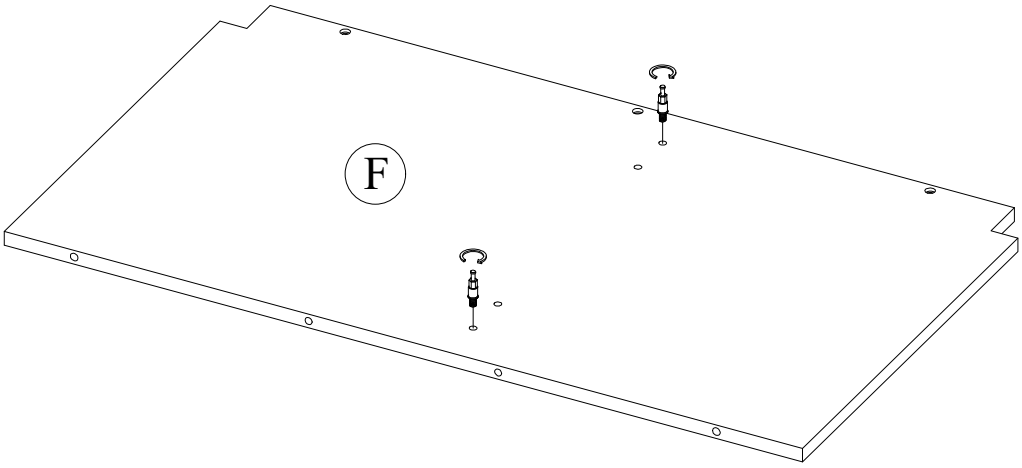

No.	Hardware	Q'ty
2	Cam lock screws	5

STEP 2

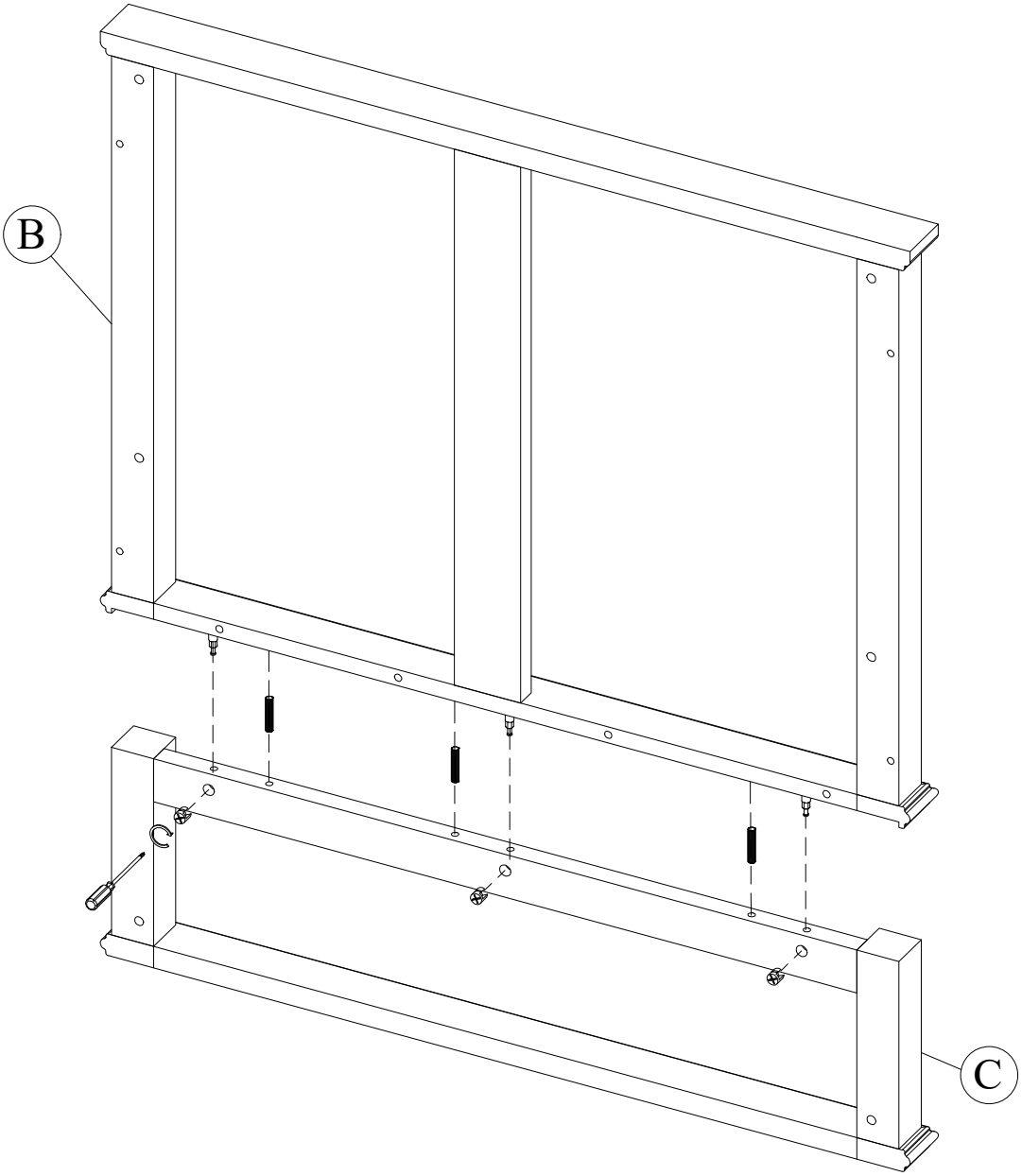

No.	Hardware	Q'ty
3	Cam lock	3
4	Wooden	3

STEP 3

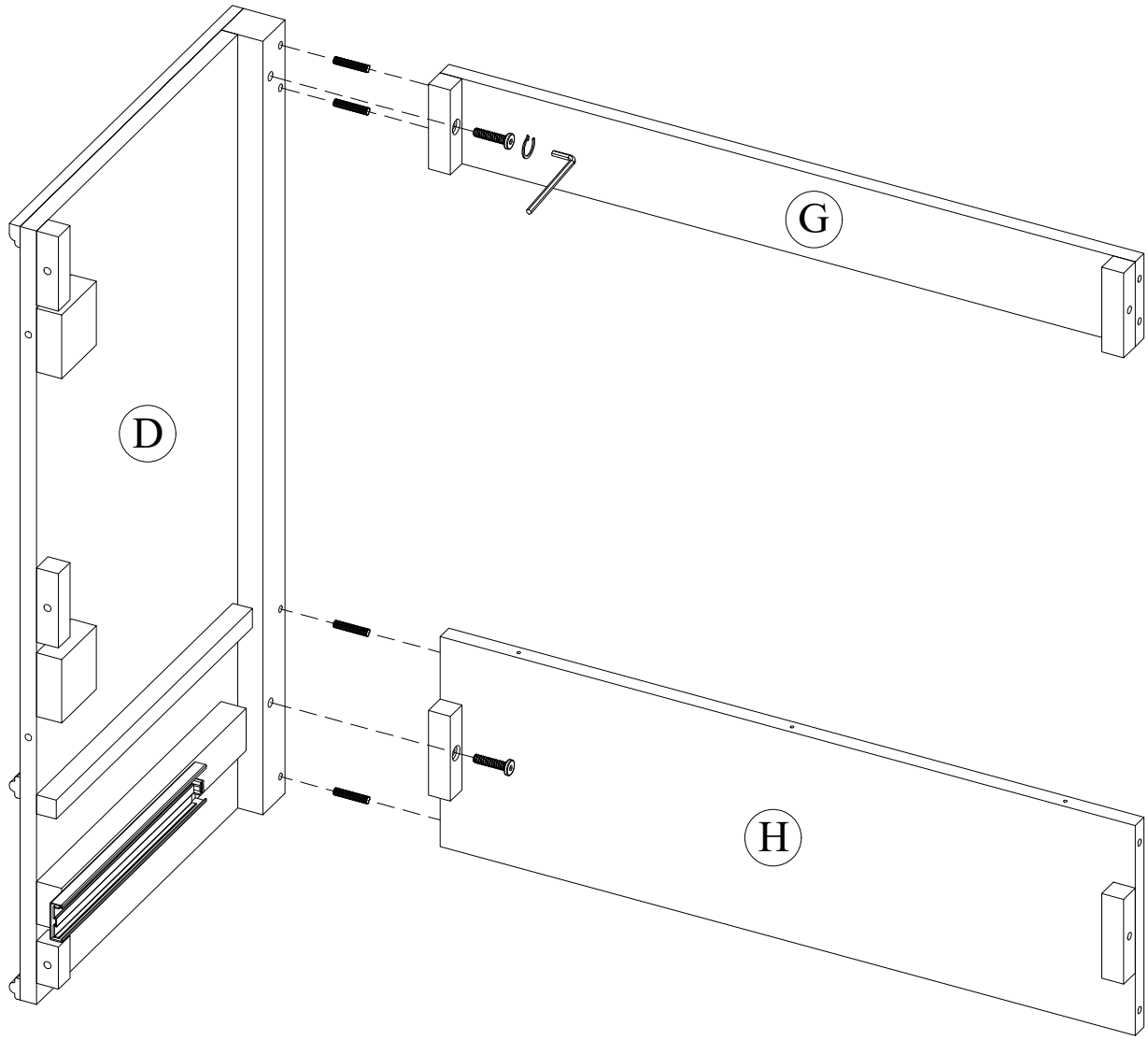

No.	Hardware	Q'ty
1	Allen Bolts 1/4"x35	2
4	Wooden	4
9	Allen key	1

STEP 4

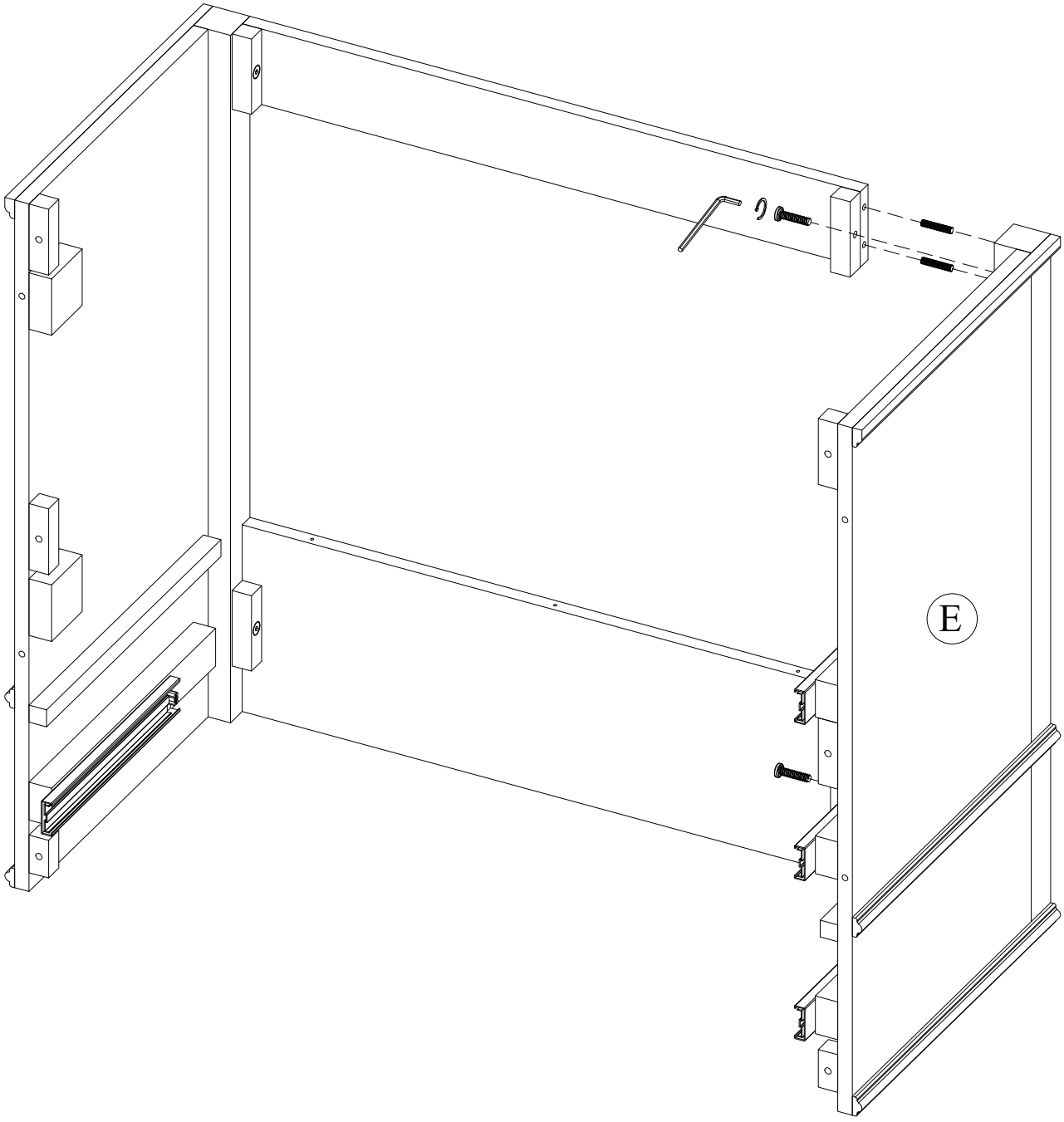

No.	Hardware	Q'ty
1	Allen Bolts 1/4"x35	2
4	Wooden	4
9	Allen key	1

STEP 5

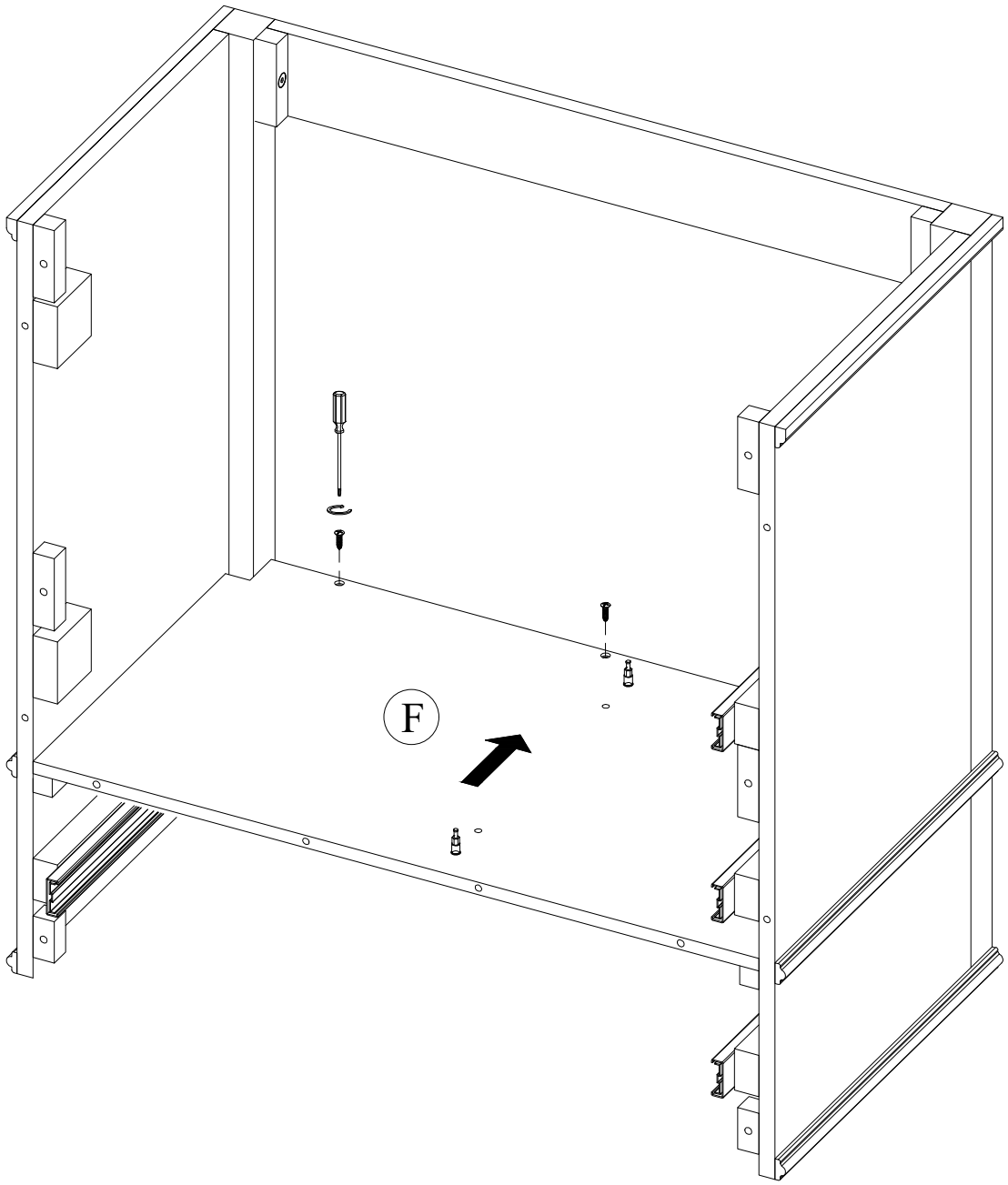

No.	Hardware	Q'ty
8	Screws 4x25	3

STEP 6

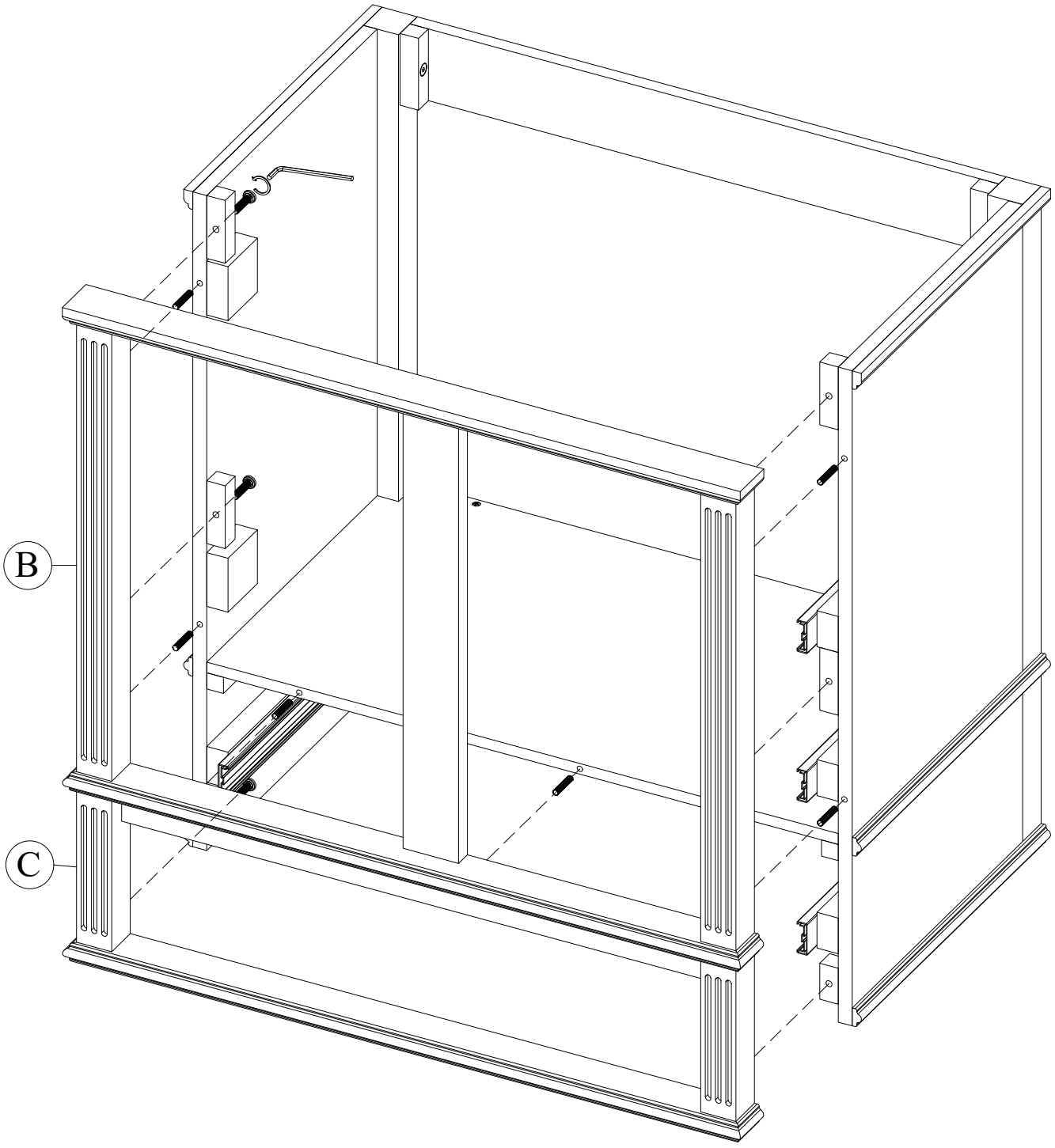

No.	Hardware	Q'ty
1	Allen Bolts 1/4"x35	6
4	Wooden	8
9	Allen key	1

STEP 7

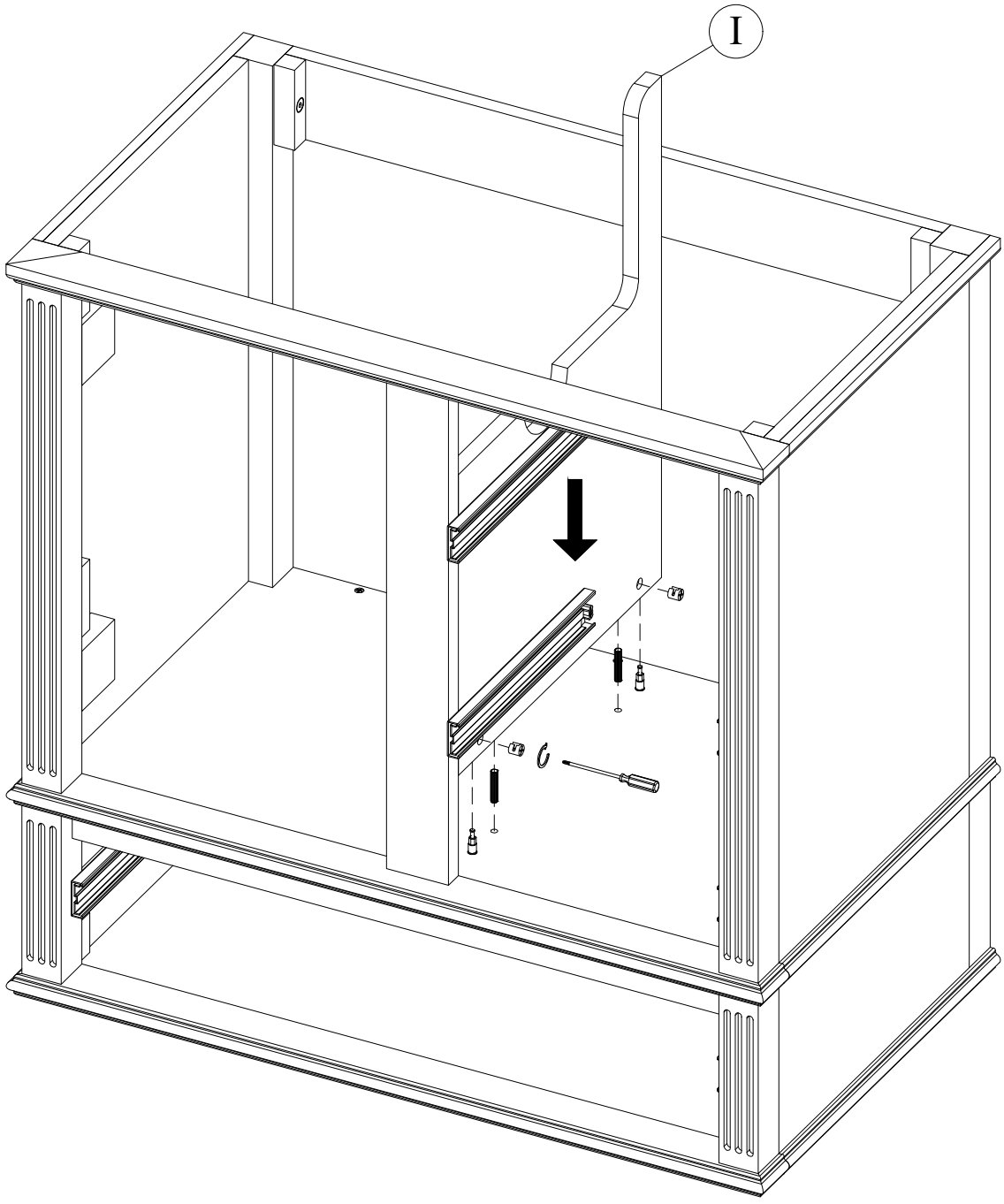

No.	Hardware	Q'ty
3	Cam lock	2
4	Wooden	2

STEP 8

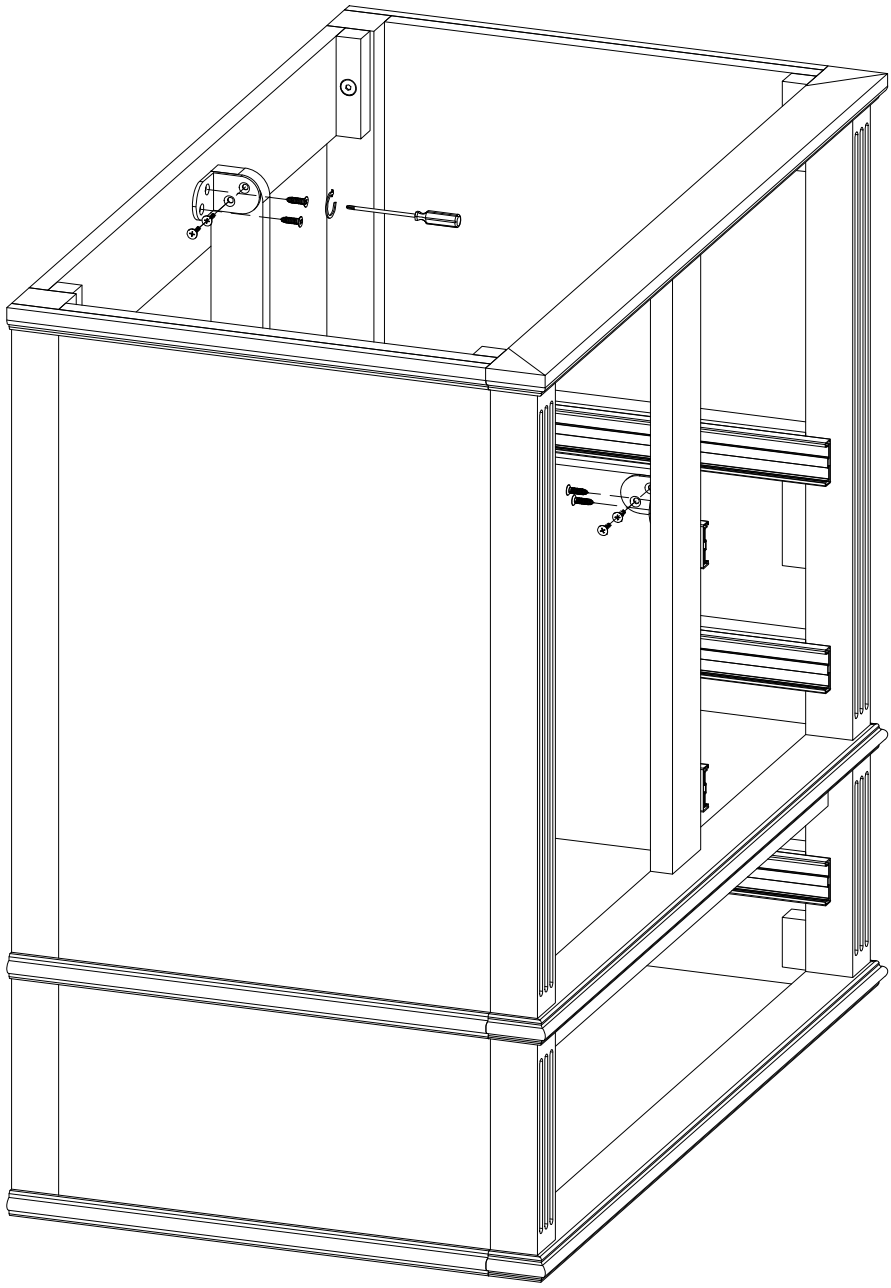

No.	Hardware	Q'ty
12	Angle Bracket	2
13	Screws 4x15	8

STEP 9

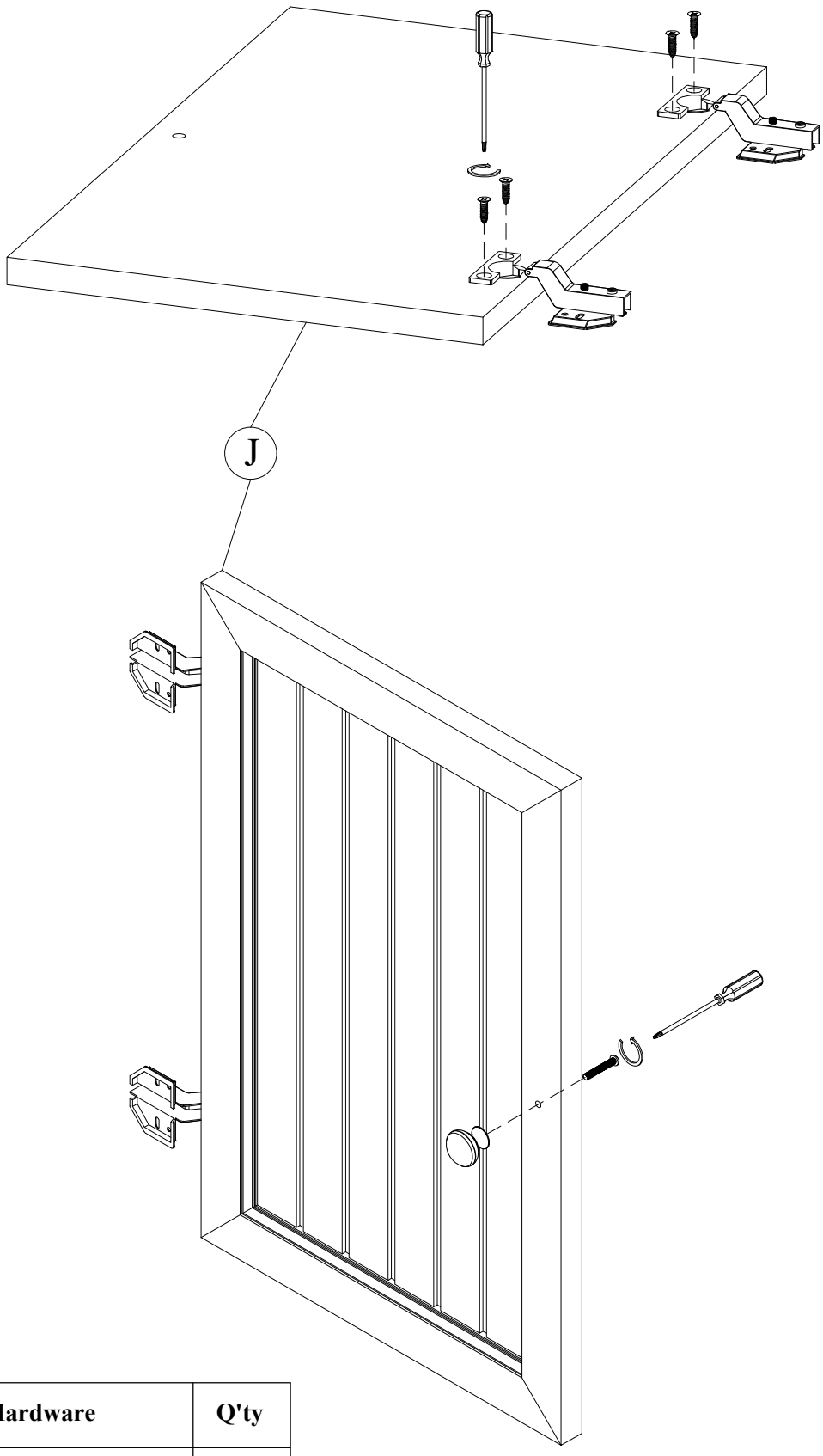

No.	Hardware	Q'ty
6	Knot	1
7	Screws M4x25	1
10	Hinges	2
11	Screws 4x15	4

STEP 10

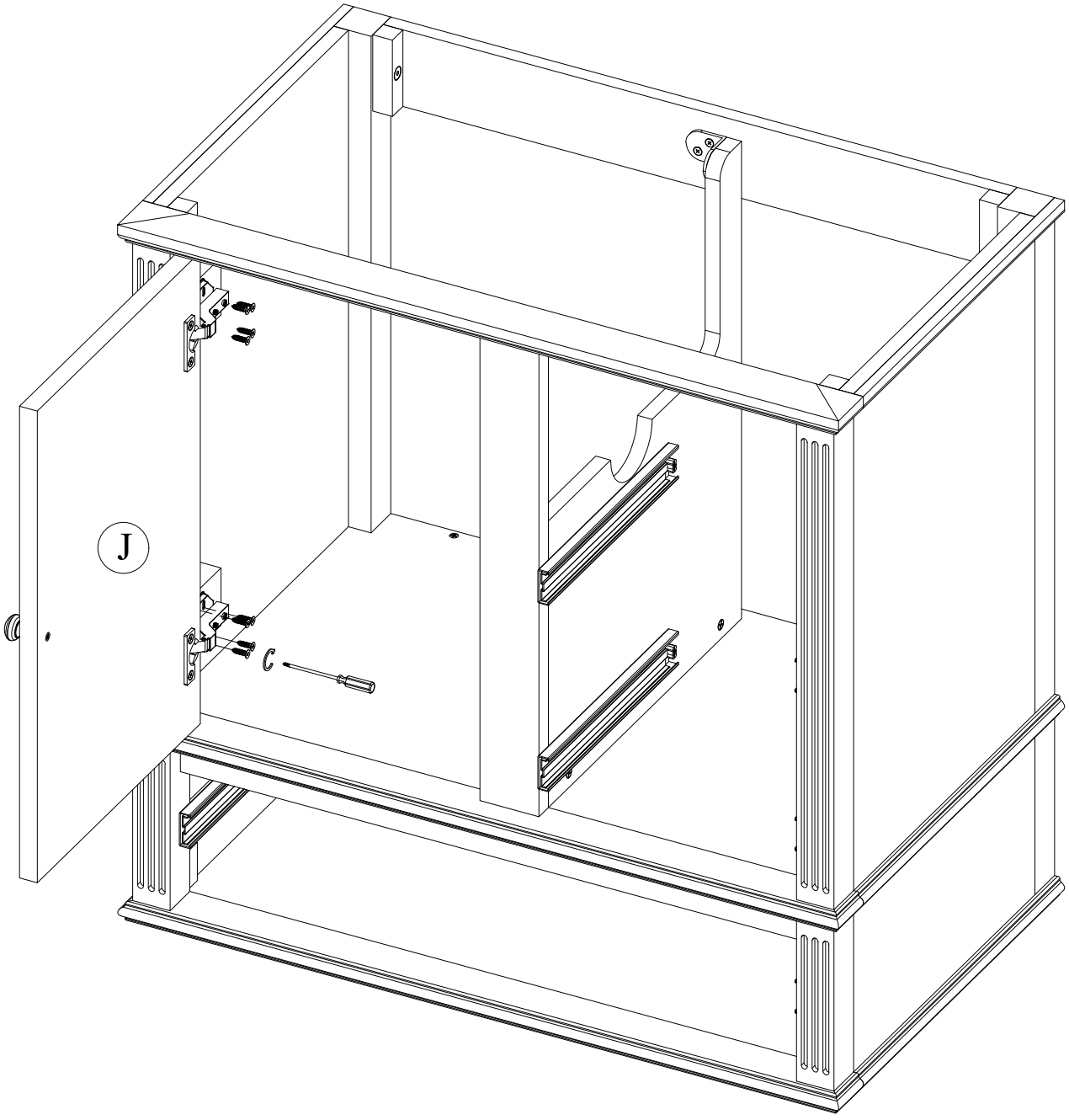

No.	Hardware	Q'ty
11	Screws 4x15	8

STEP 11

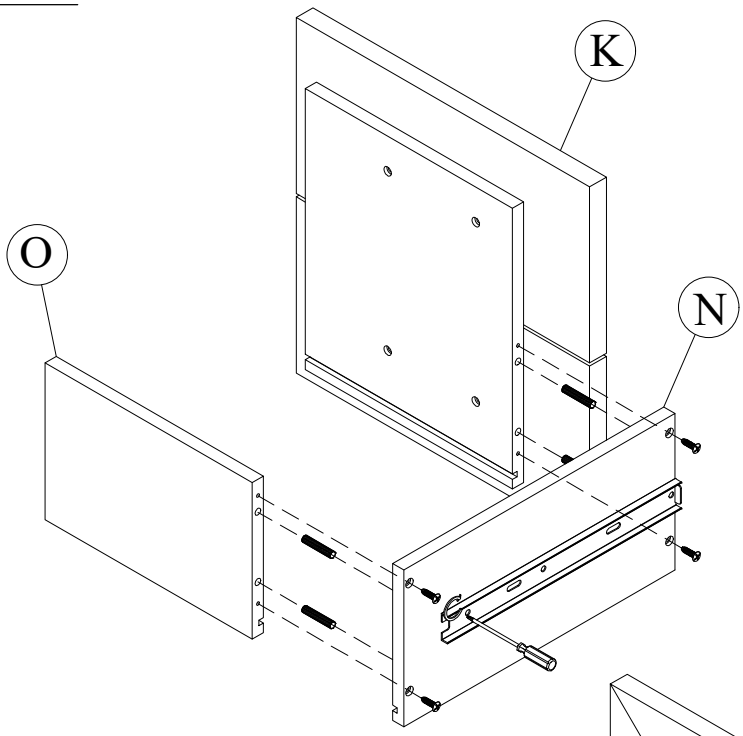

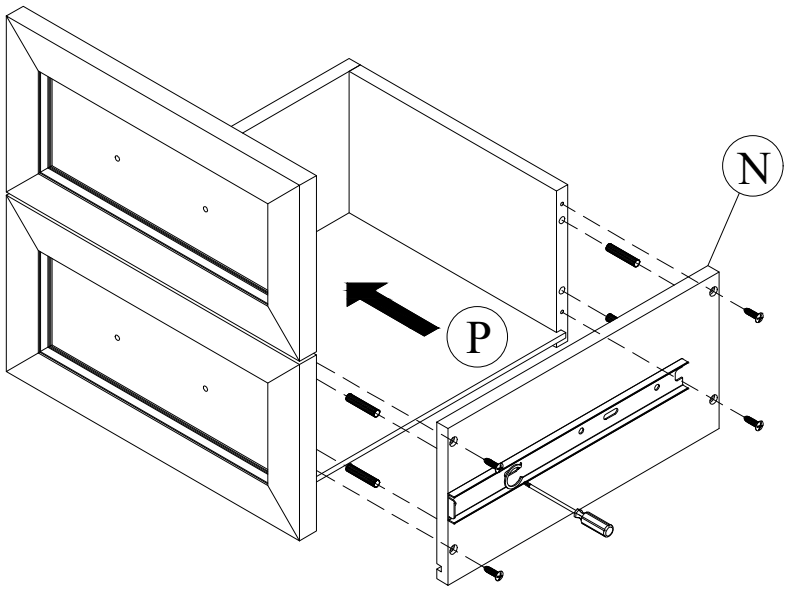

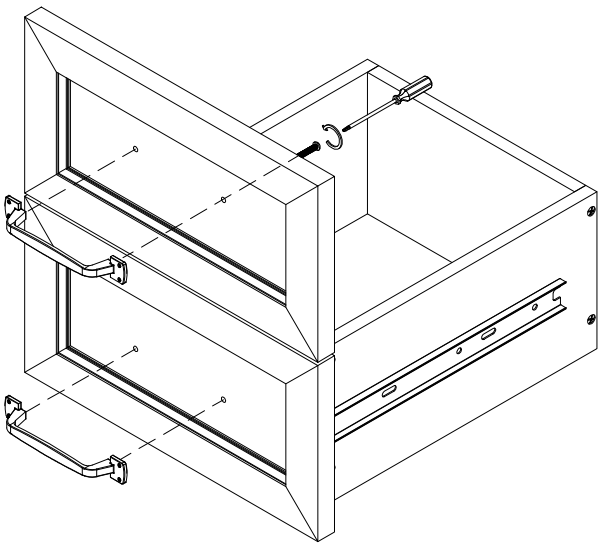

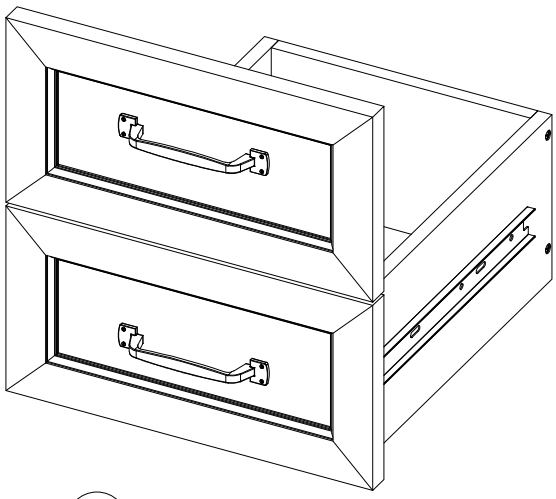

No.	Hardware	Q'ty
4	Wooden	8
5	Handle	2
7	Screws M4x25	4
8	Screws 4x25	8

STEP 12

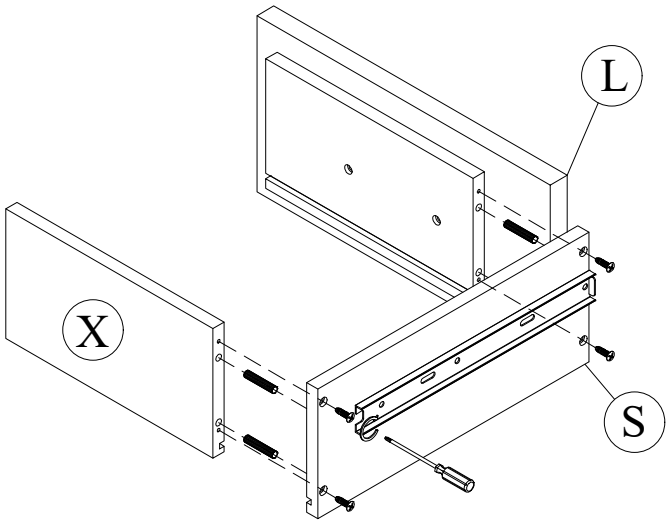

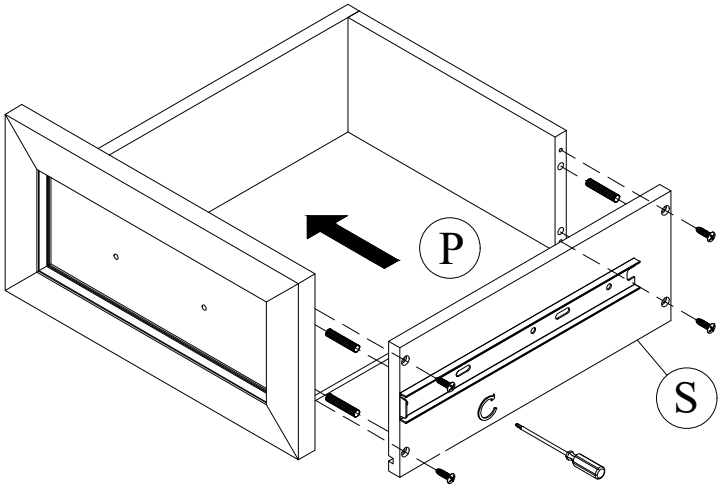

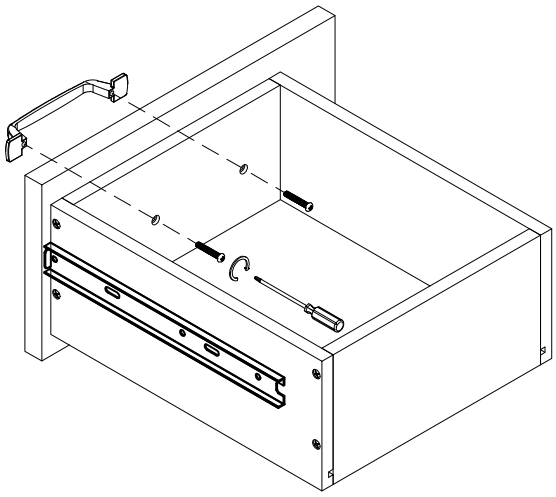

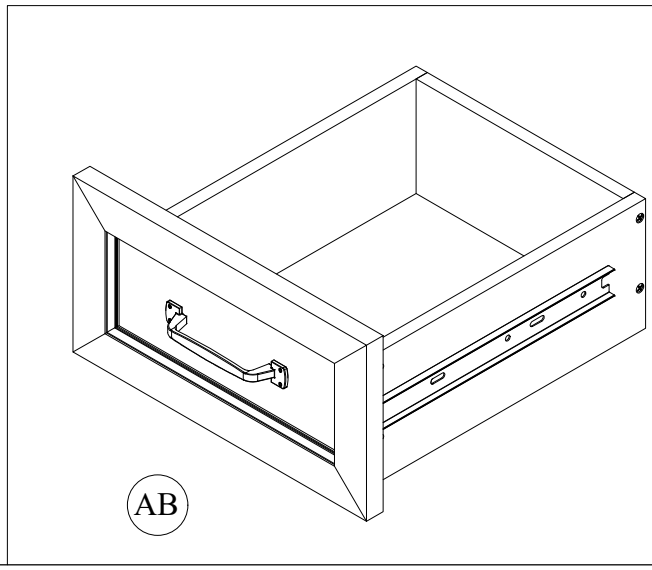

No.	Hardware	Q'ty
4	Wooden	8
5	Handle	1
7	Screws M4x25	2
8	Screws 4x25	8

STEP 13

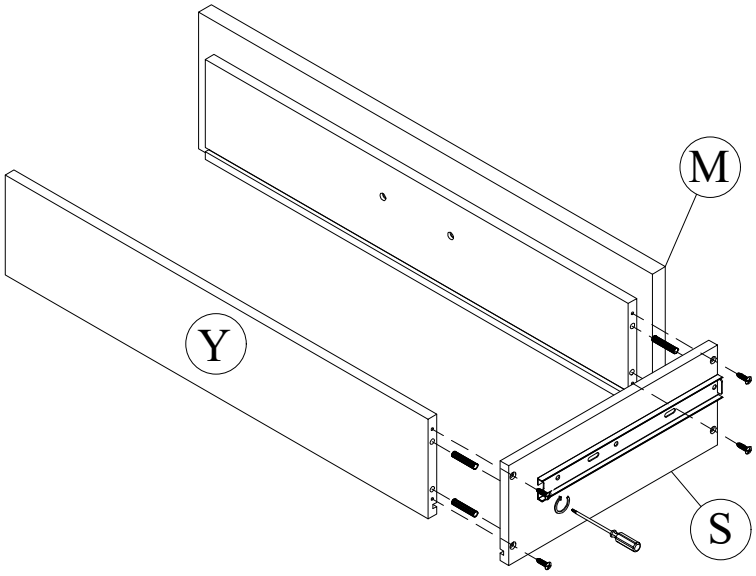

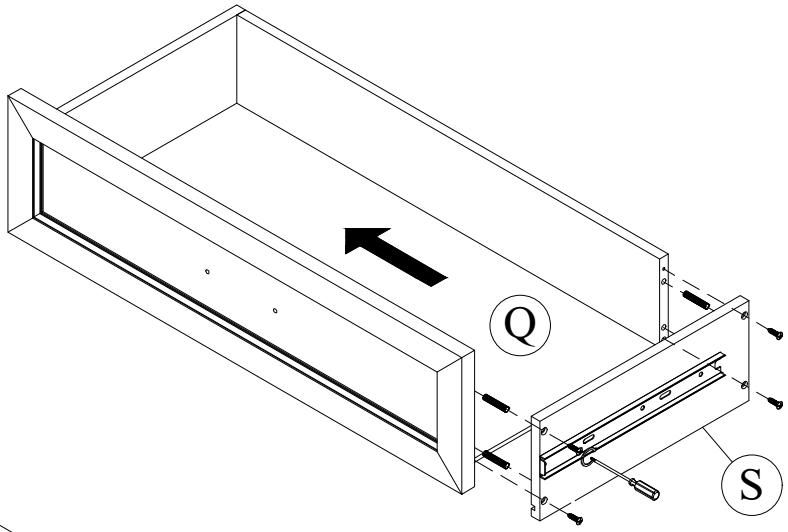

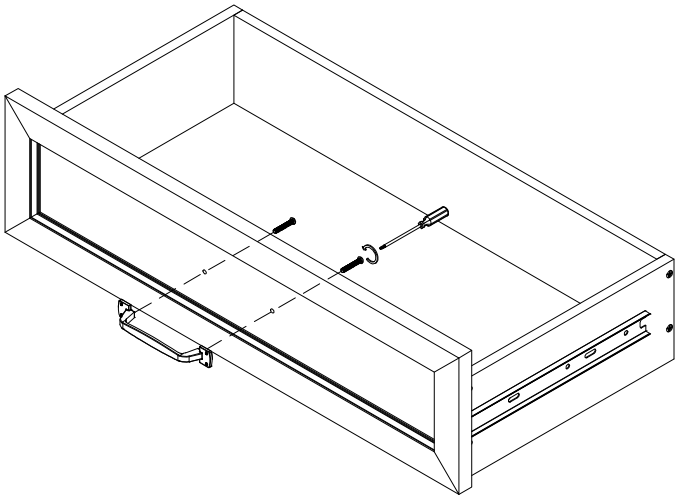

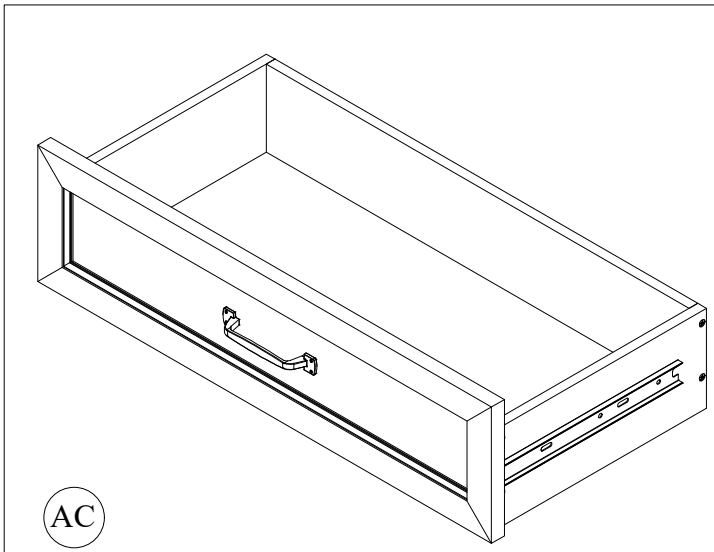

No.	Hardware	Q'ty
4	Wooden	8
5	Handle	1
7	Screws M4x25	2
8	Screws 4x25	8

STEP 14

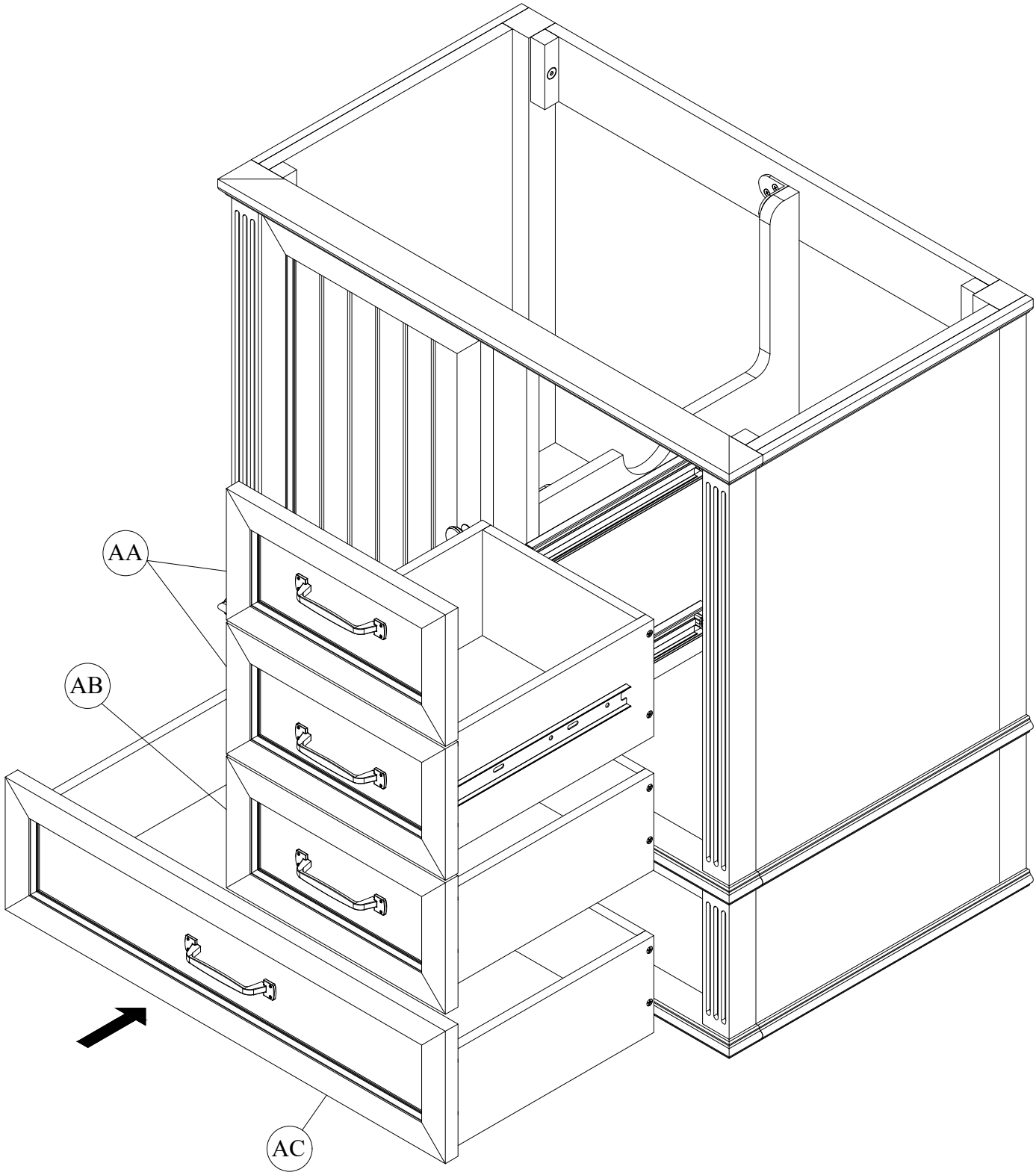

STEP 15

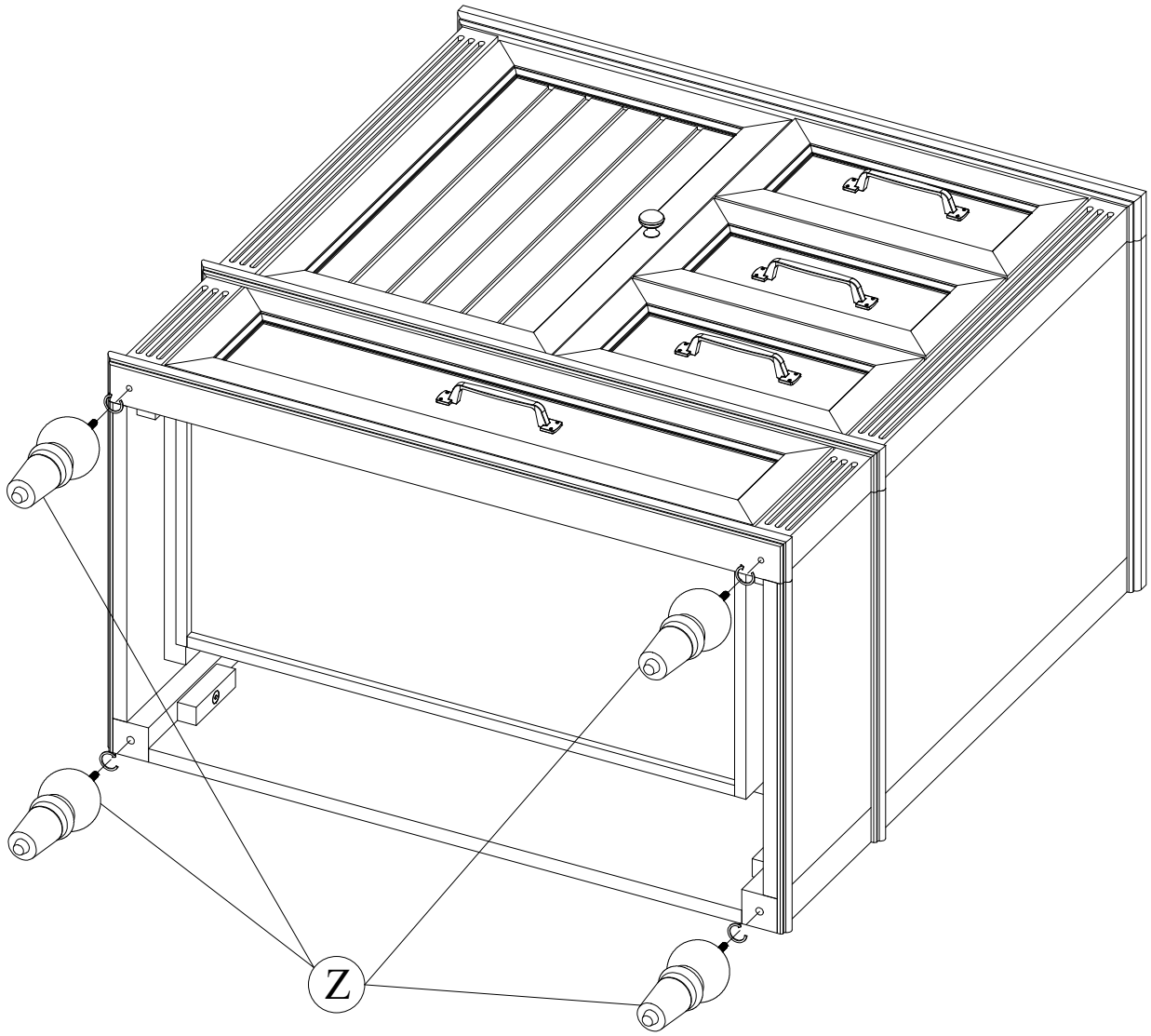

STEP 16

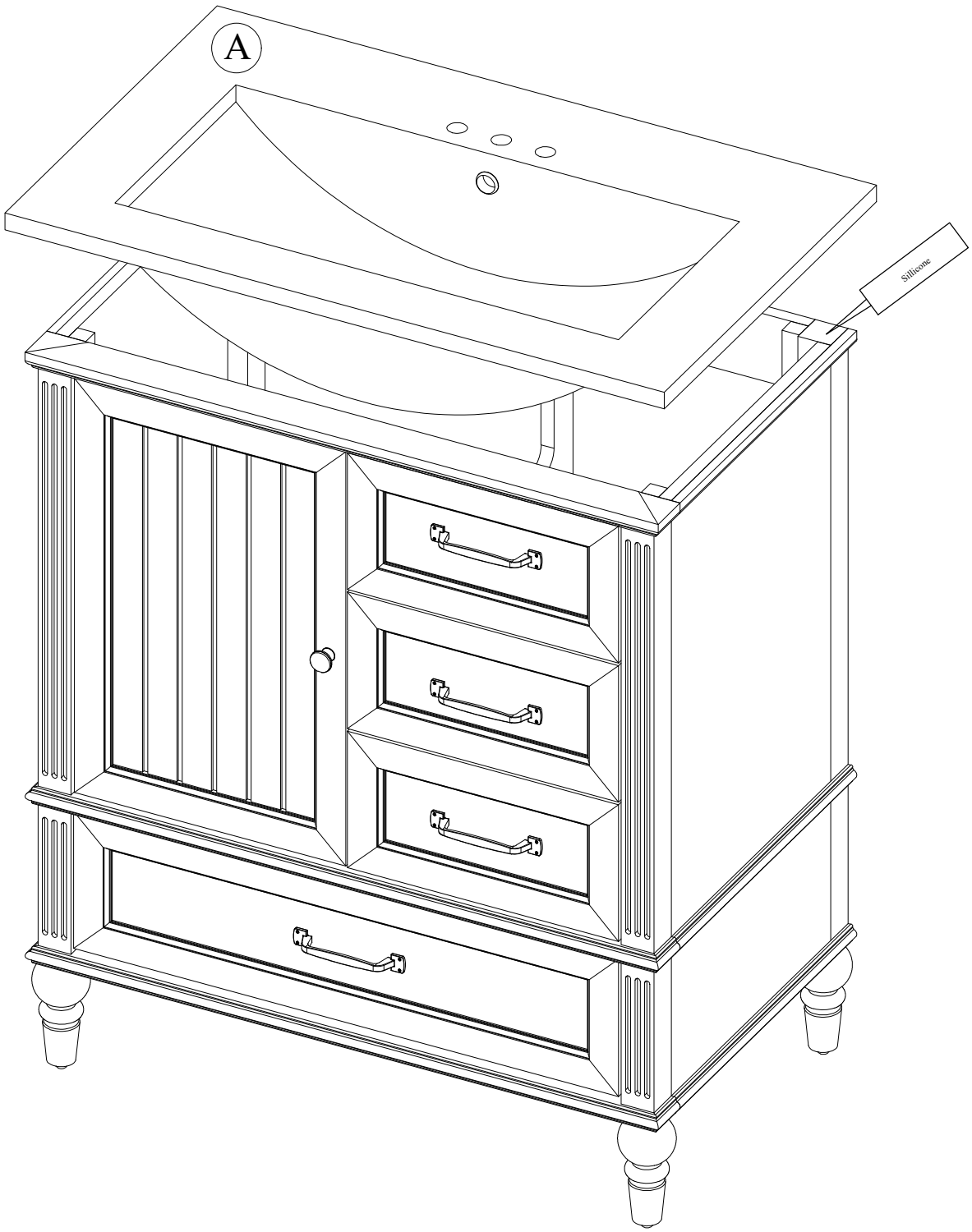

STEP 17

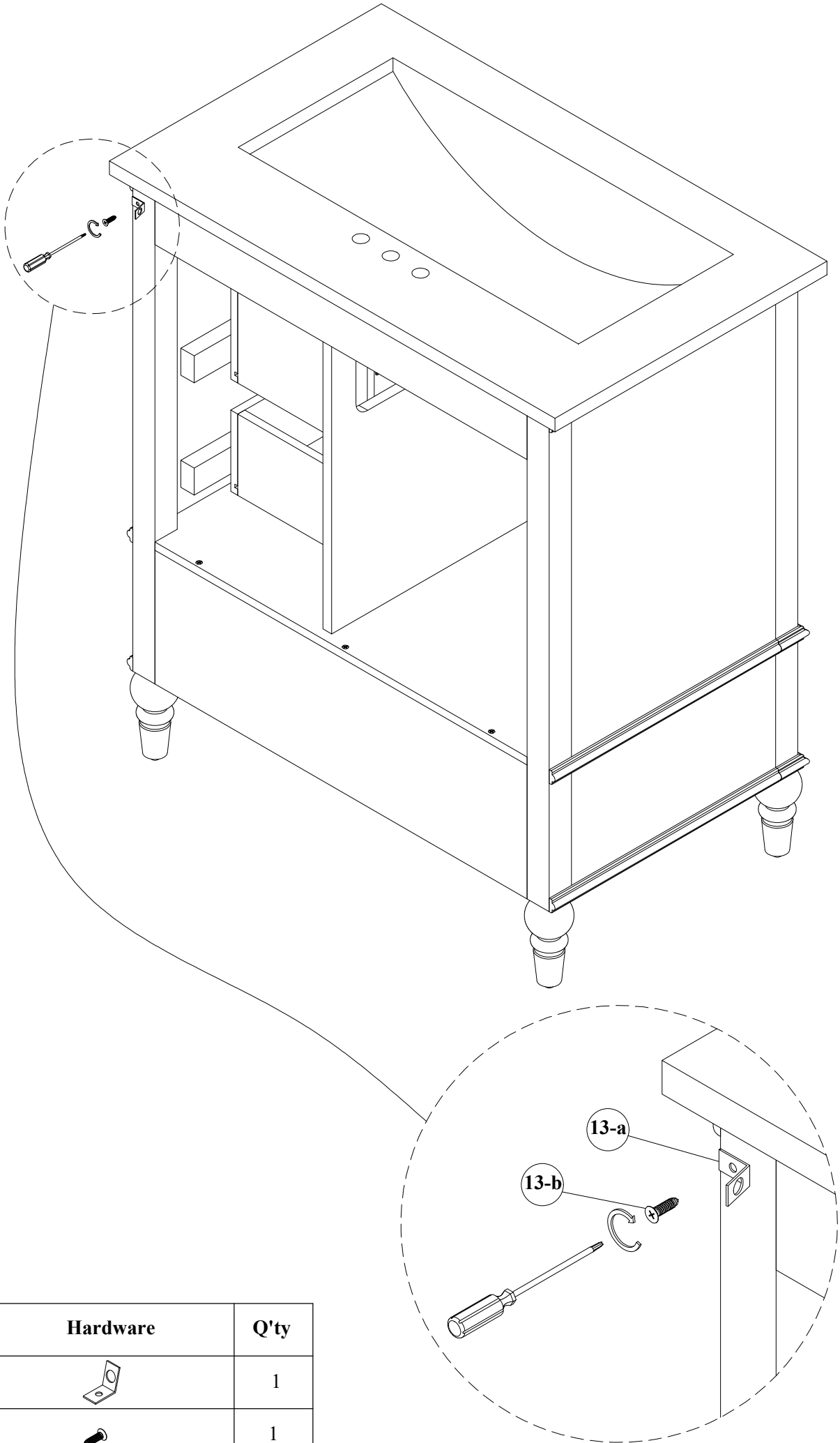

No.	Hardware	Q'ty
13-a		1
13-b		1

STEP 18

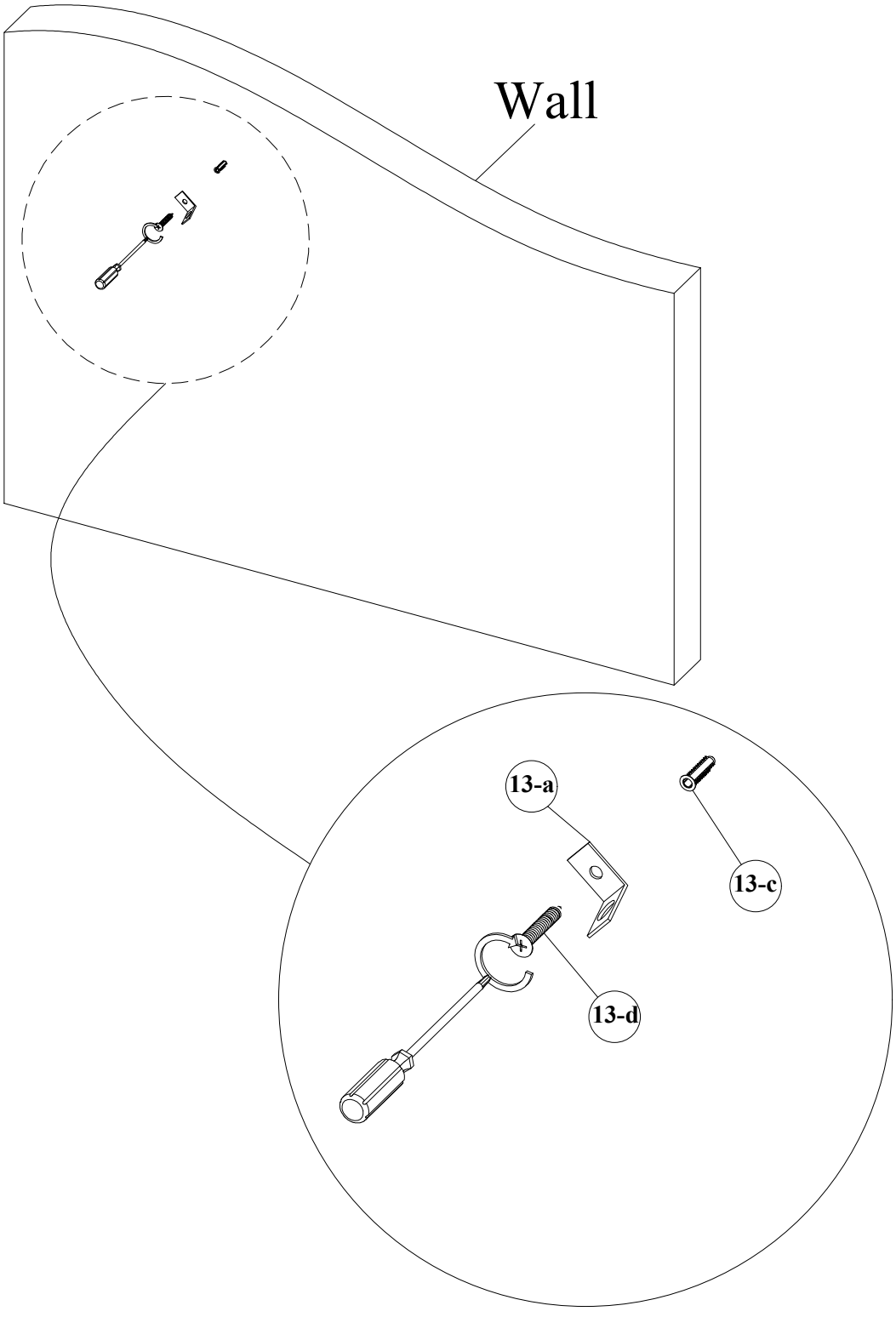

No.	Hardware	Q'ty
13-a		1
13-c		1
13-d		

STEP 19

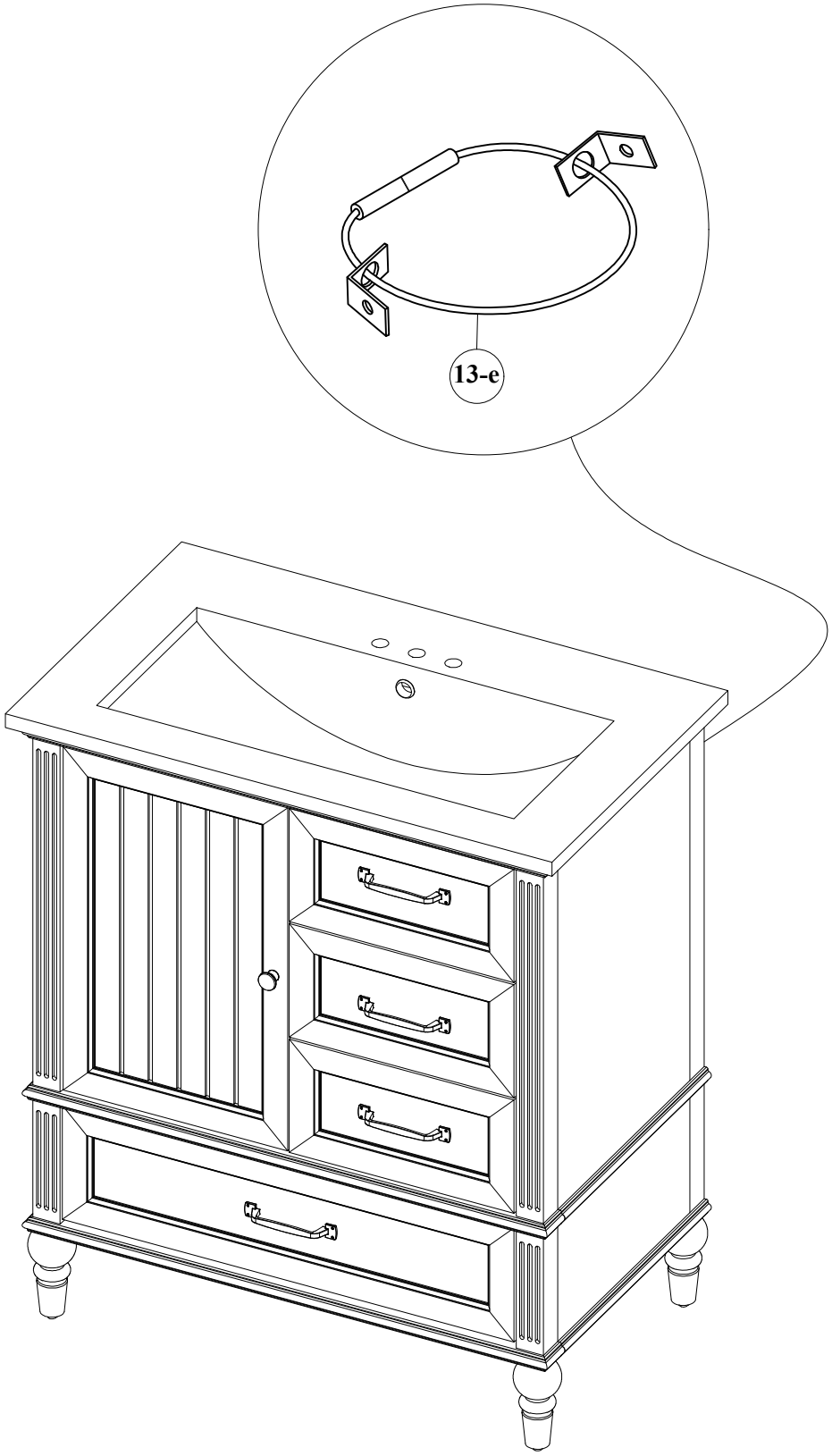

No.	Hardware	Q'ty
13-e	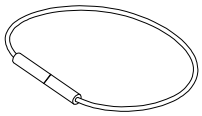	1

FINISH

