ASSEMBLY INSTRUCTION

Ax1

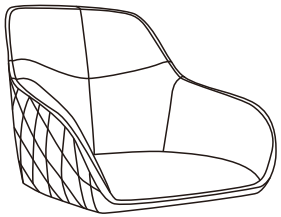

Fx1



Bx1

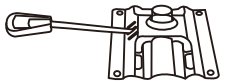

Gx5



Cx1

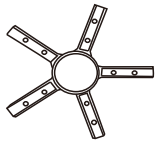

Hx14



M6x16

Dx5



Ix1



Ex1



①

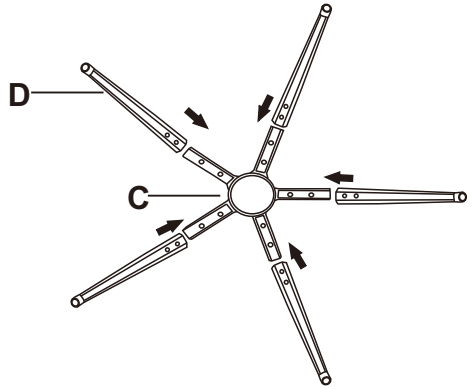

②

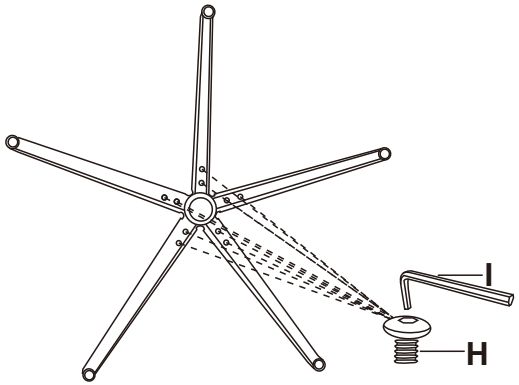

③

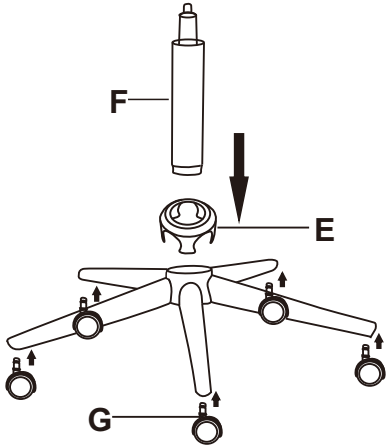

④

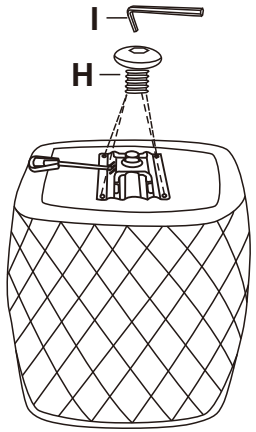

⑤

