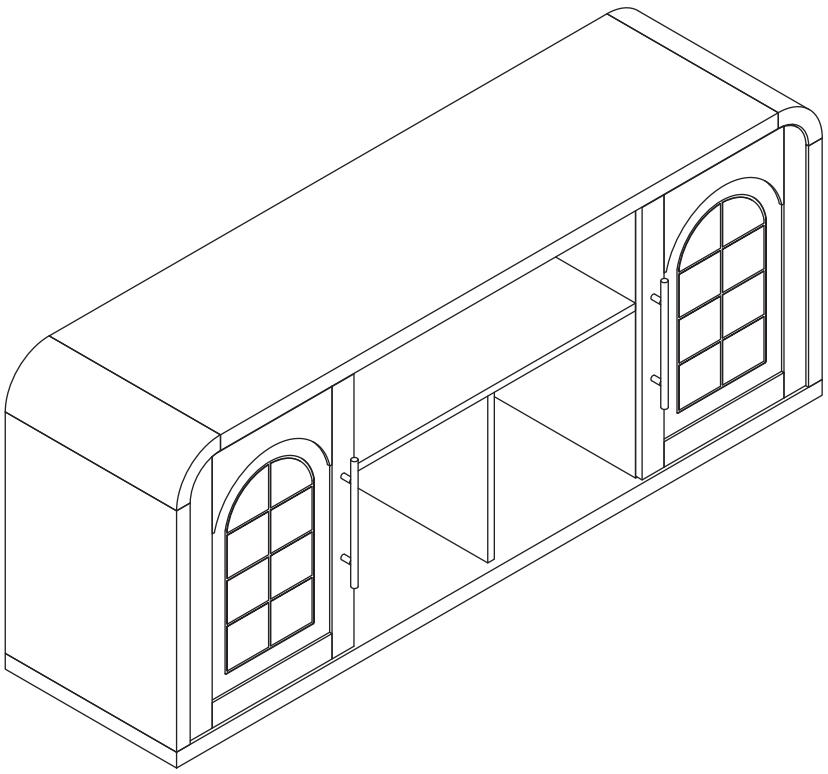

ATTENTION

If there is any missing, please kindly send us messages to let us know the part number of missing part regarding to the first page of instructions.

Please also provide your full address, recipient name and contact phone number so that we can send replacement to you as soon as possible.

Children have died from furniture tipover. To reduce the risk of furniture tipover. ALWAYS install tipover restraint provided.

BEFORE STARTING

Before Using Product

- Read each step carefully before starting.It is very important thateach step is performed in the correct order.If these steps are not followed in sequence,assembly difficulties will occur.
- Make sure all parts are included.
- Work in a spacious area and near where the unit will be used,preferably on a carpet,or use a piece of the cardboard packaging to protect your floor and product.
- For a smooth assembly process,we suggest you keep a lite tightness for all the screws during assembly.After the whole product is assembled, firmly tighten all the screws.

⚠ WARNING

- Do not allow children to climb on unit.
- Avoid sharp objects or corrosive chemicals to prevent damage to the product.
- During assembly,keep parts and packaging materials away from children and pets as there could be potential injury and choking hazards.
- Please make sure that all objects are removed before moving the assembled unit.
- The unit must be team lifted,not dragged or pushed.Failure to do so could cause instability,product collapse,and/or serious injury.
- Be careful when using power tools to assemble your furniture.Power tools may strip or damage the parts.

QUICKFIT

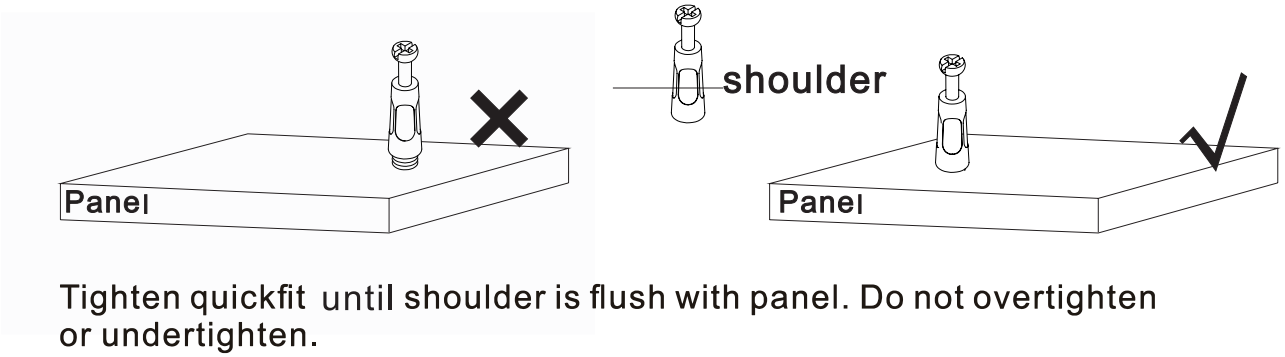

Tighten quickfit until shoulder is flush with panel. Do not overtighten or undertighten.

CAM LOCK

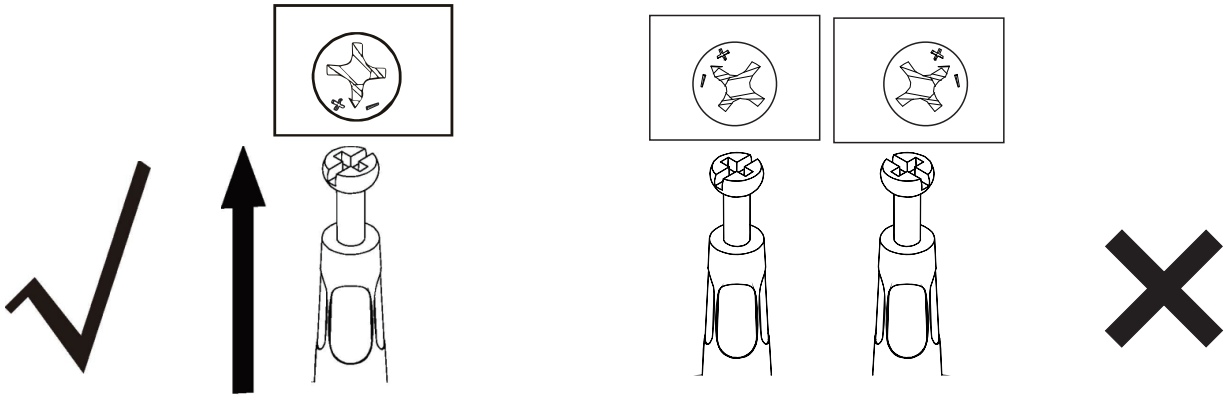

CORRECT WRONG

When fitting cam lock, ensure starting positions is correct before you insert cam lock to quickfit.

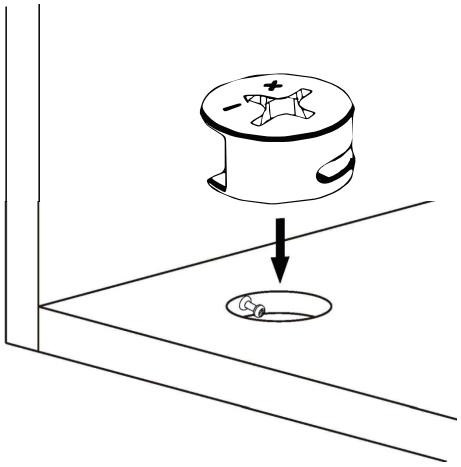

Quickfit head should be in the center of the cam lock. When the two panels are joined. Cam lock should be inserted before quickfit.

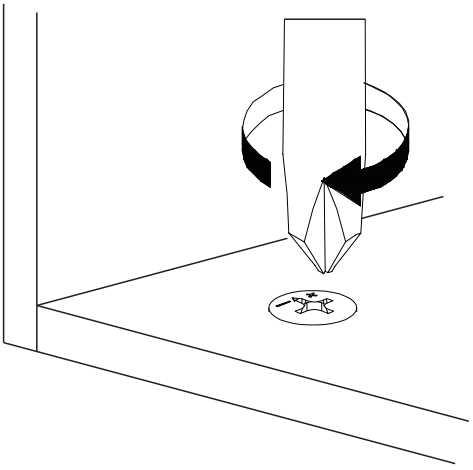

Turn cam lock clockwise to tighten.

Adjusting the doors / Réglage des portes / Ajuste de las puertas

FRONT VIEW | VUE DE FACE | VISTA FRONTAL

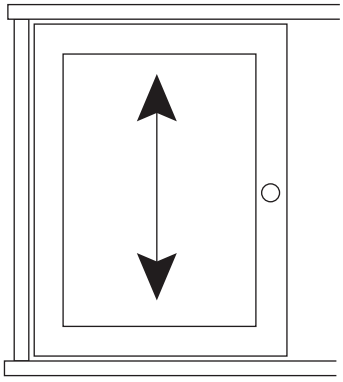

UP AND DOWN
Use screws to adjust the gaps at the top and bottom of door.

HAUT ET BAS
Utilisez des vis pour ajuster les espaces en haut et en bas de la porte.

ARRIBA Y ABAJO
Use tornillos para ajustar los espacios en la parte superior e inferior de la puerta.

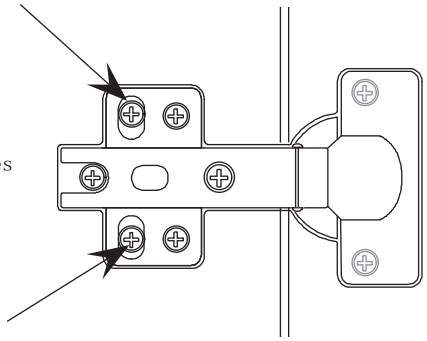

rt

FRONT VIEW | VUE DE FACE | VISTA FRONTAL

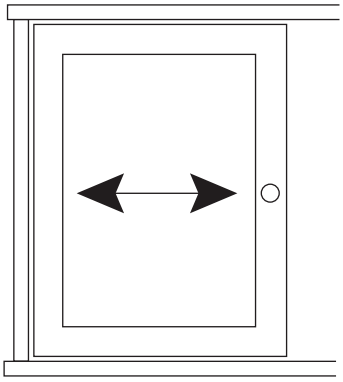

LEFT AND RIGHT
Use screw to adjust the gaps at left and right of the door.

GAUCHE ET DROITE
Utilisez la vis pour ajuster les écarts à gauche et à droite de la porte.

IZQUIERDA Y DERECHA
Use un tornillo para ajustar los espacios a la izquierda y a la derecha de la puerta.

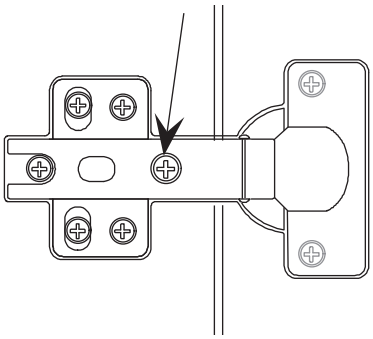

rt

TOP VIEW | VUE DE HAUT | VISTA SUPERIOR

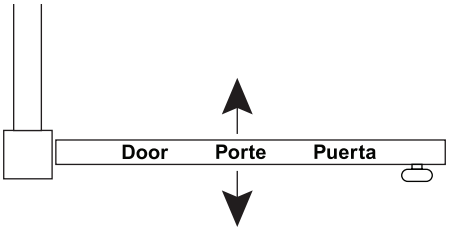

IN AND OUT
Use screw to move the door in or out.

DEDANS ET DEHORS
Utilisez la vis pour déplacer la porte vers l' intérieur ou vers l' extérieur.

DENTRO Y FUERA
Use un tornillo para mover la puerta hacia adentro o hacia afuera.

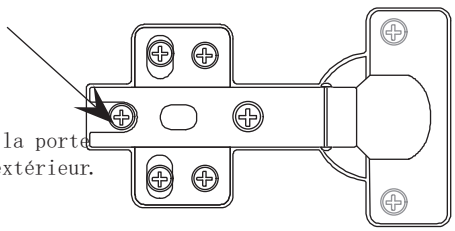

1 x1

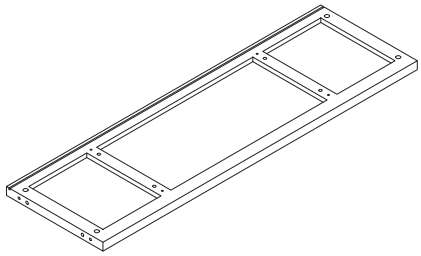

2 x2

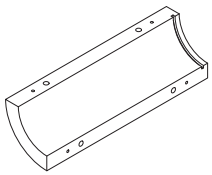

3 x1

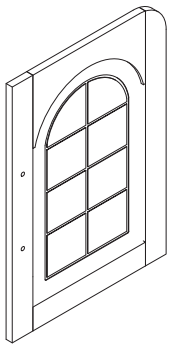

4 x1

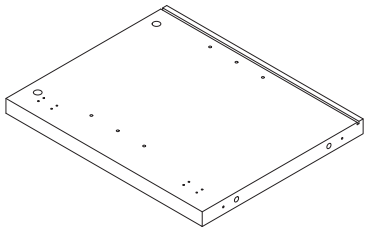

5 x1

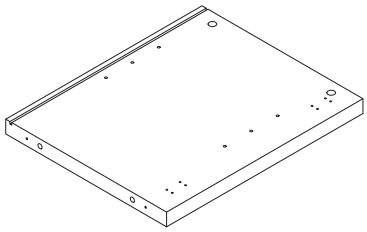

6 x1

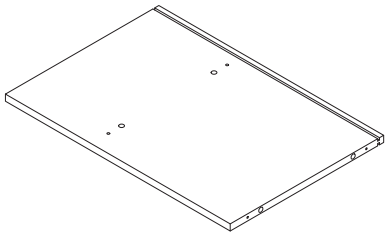

7 x1

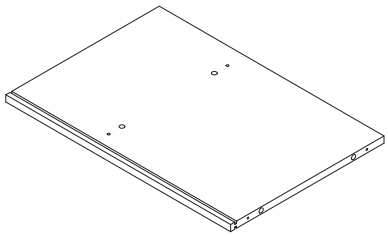

8 x1

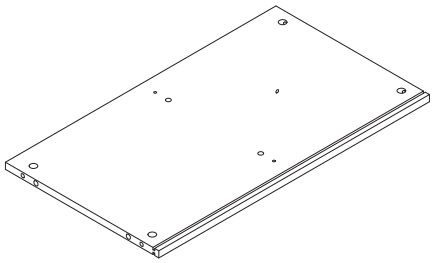

9 x1

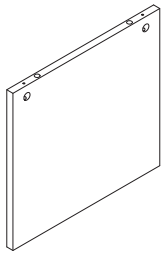

10 x1

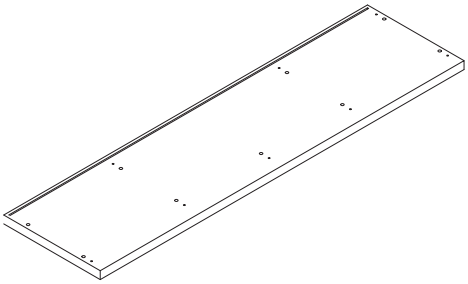

11 x2

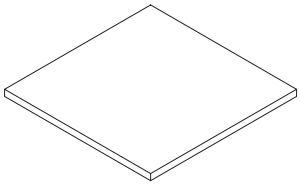

12 x2

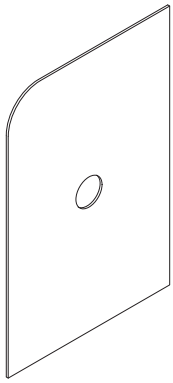

13 x1

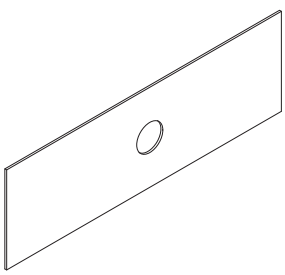

14 x1

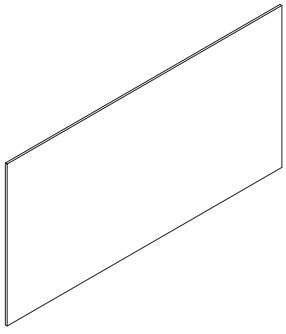

15 x1

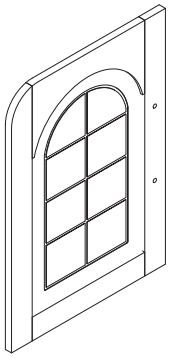

Hardware List

A	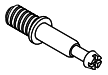	Ø6*34mm	18+1 pcs
B		Ø15*9.5mm	18+1 pcs
C		Ø8*30mm	20+2 pcs
D		4*22mm	4 pcs
E			8 pcs
F		Ø10*50mm	8+1 pcs
G		Ø4*50mm	10+1 pcs
H	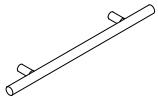		2 pcs
I	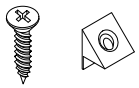	Ø3*17mm	8 sets
J	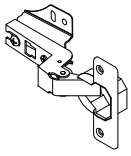		4 pcs
K		Ø3.5*15mm	24+2 pcs
	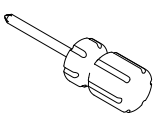		1 pcs

Explosion Diagram

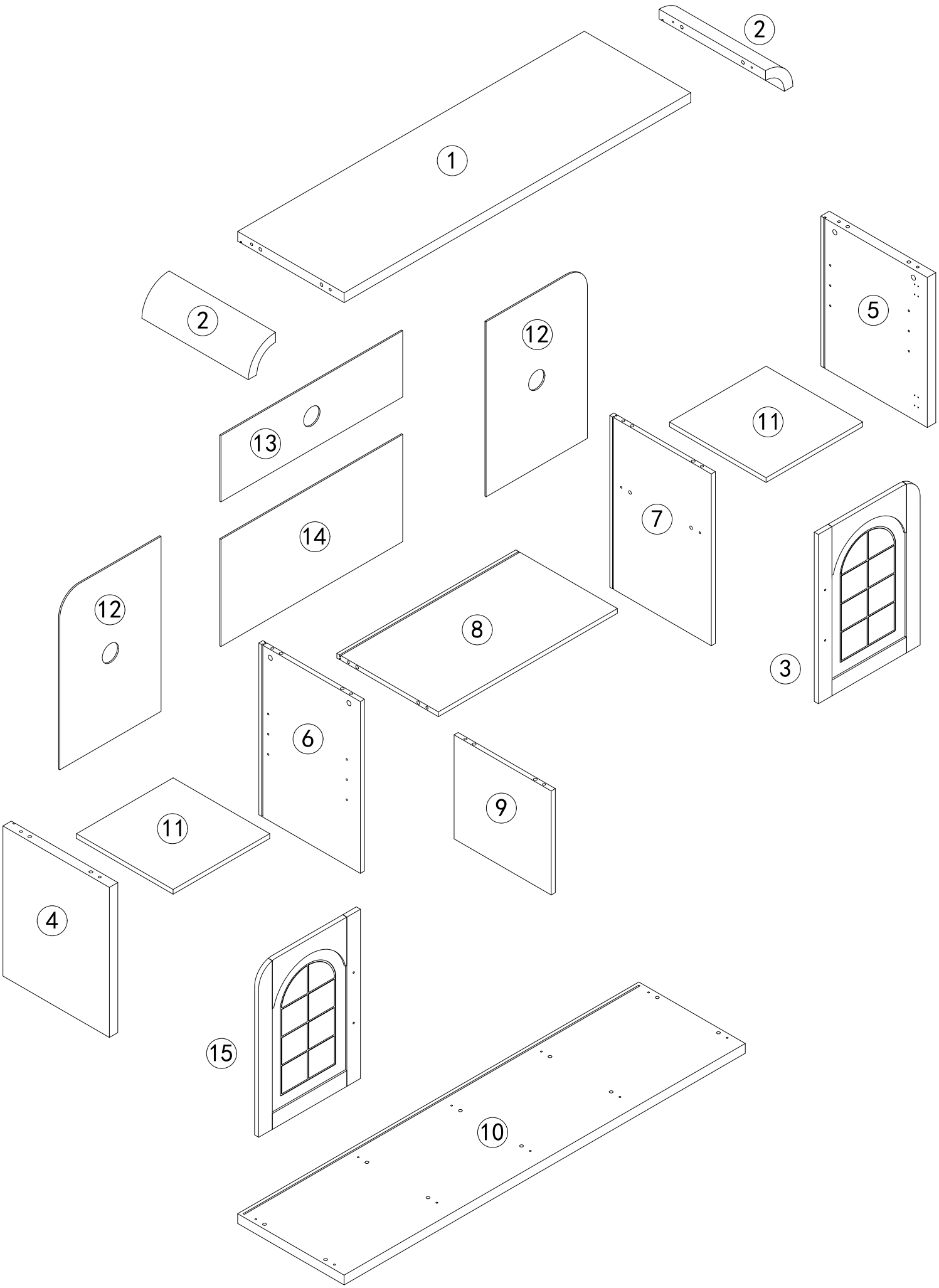

STEP 1

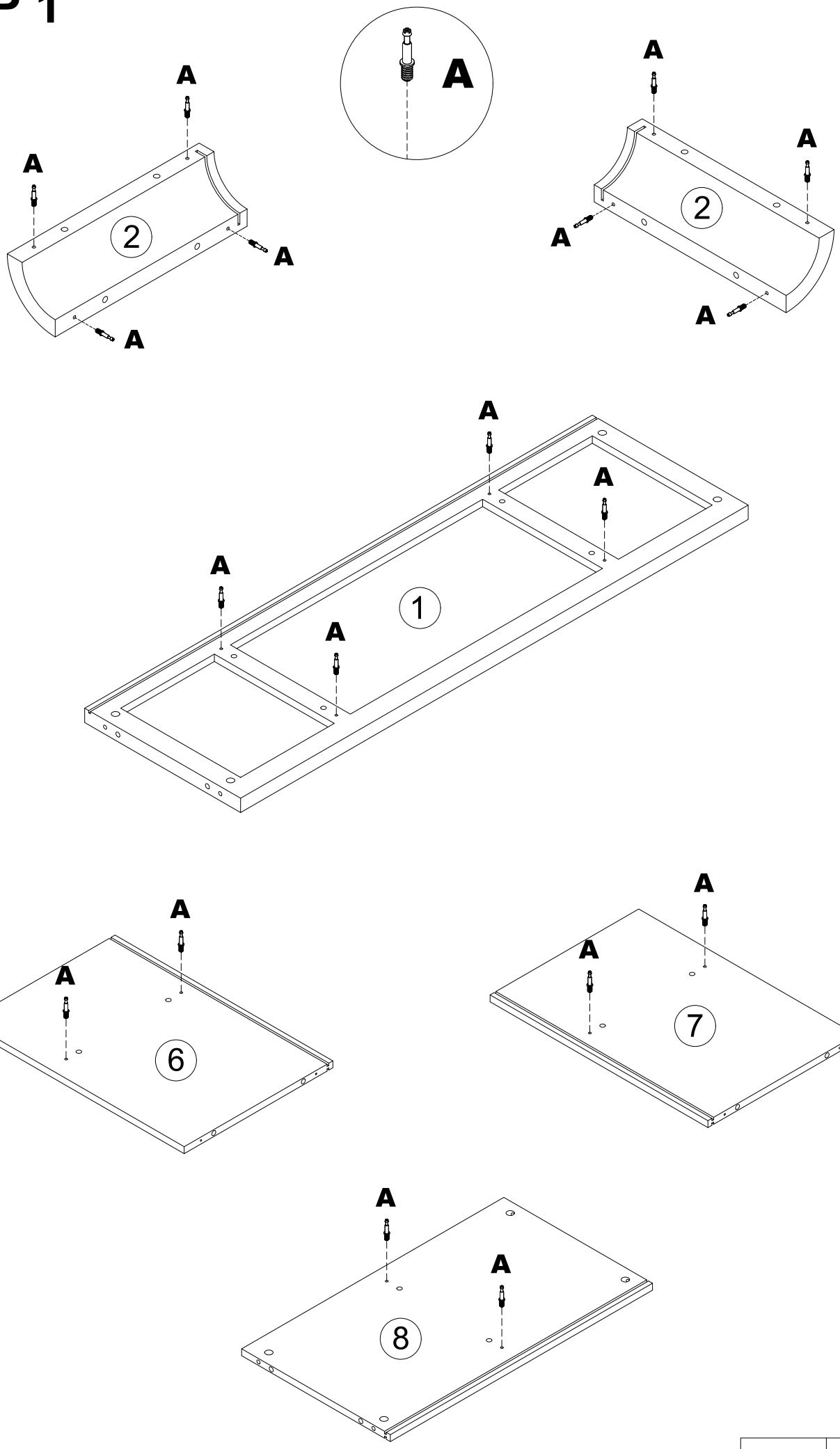

	A x 18pcs

STEP 2

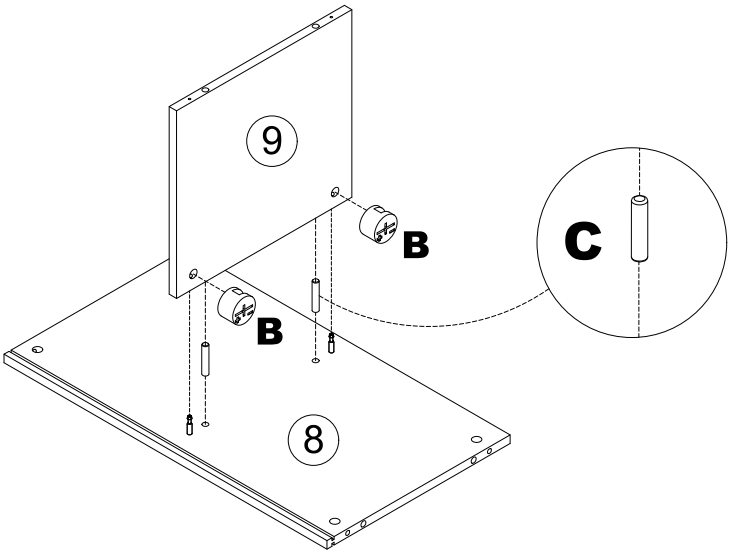

	C x 2pcs
	B x 2pcs

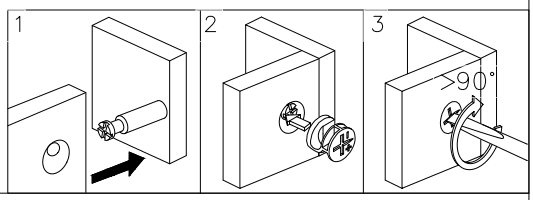

STEP 3

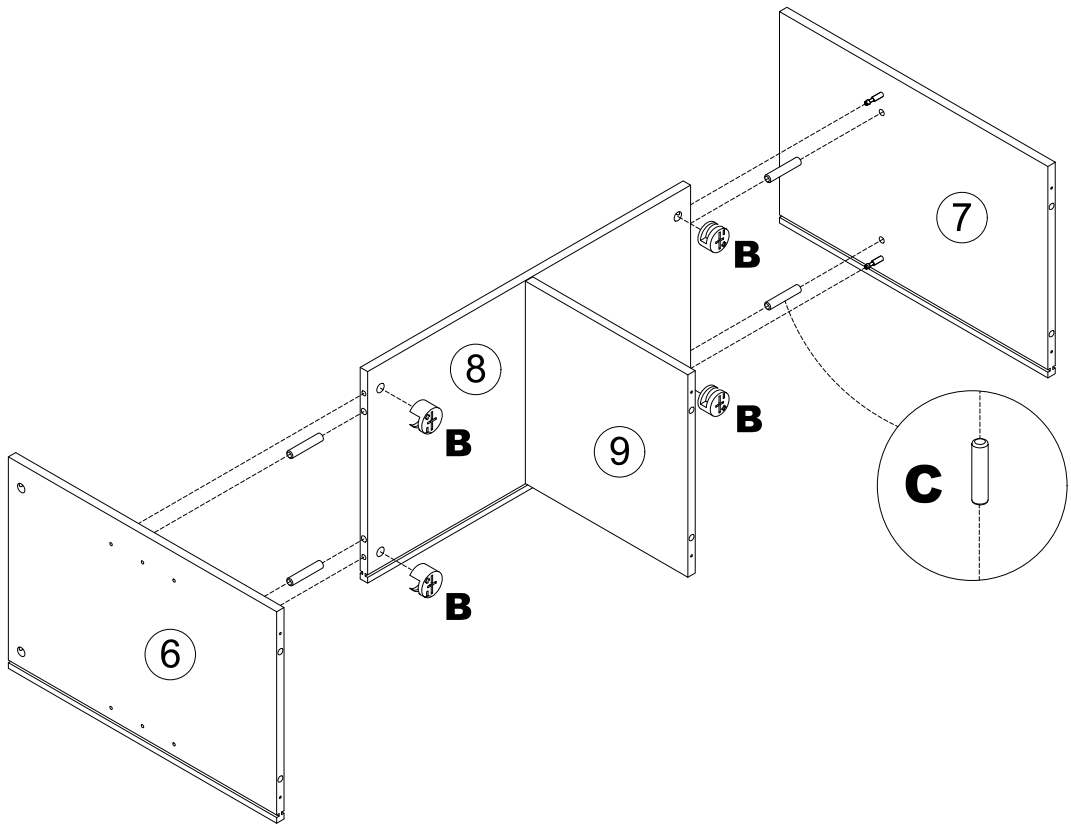

	C x 4pcs
	B x 4pcs

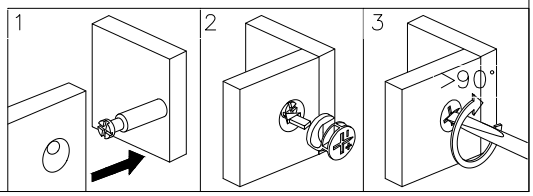

STEP 4

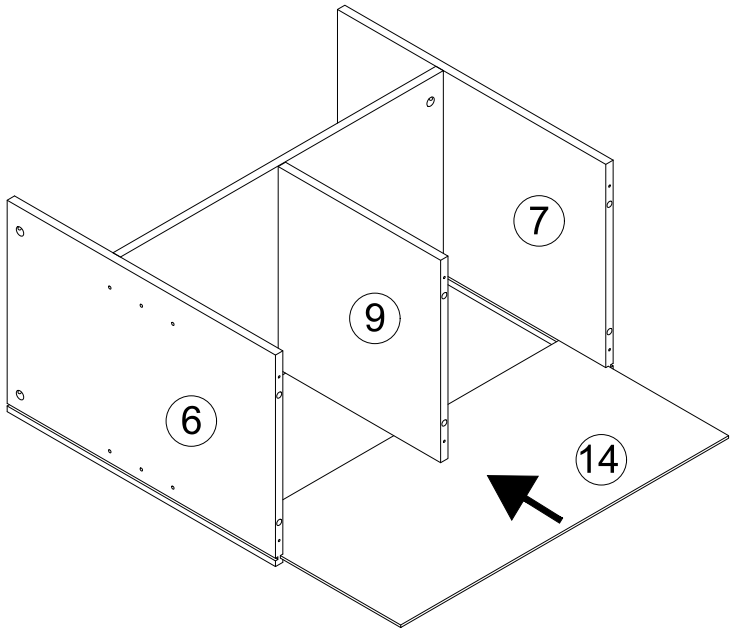

STEP 5

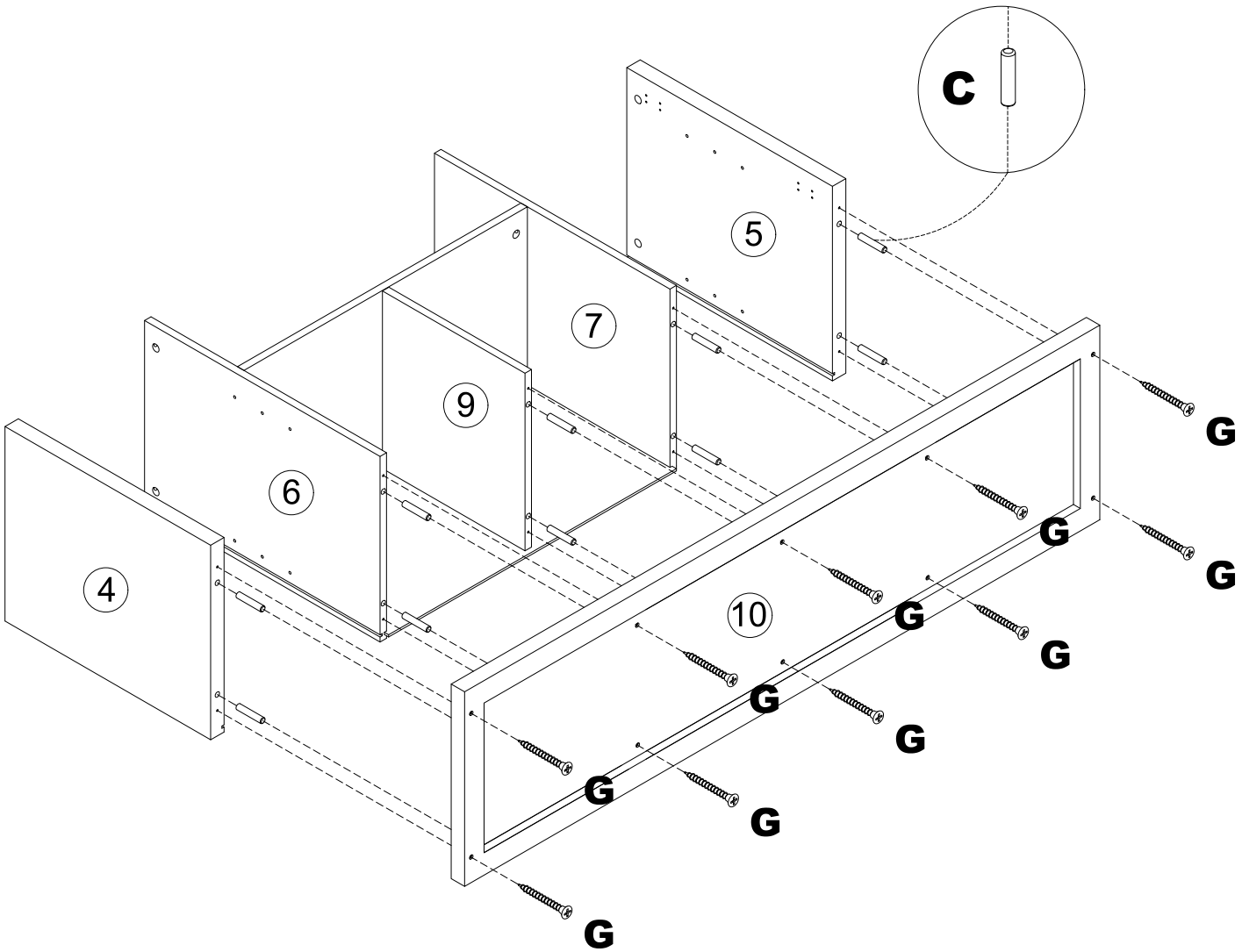

	C x 10pcs
	G x 10pcs

STEP 6

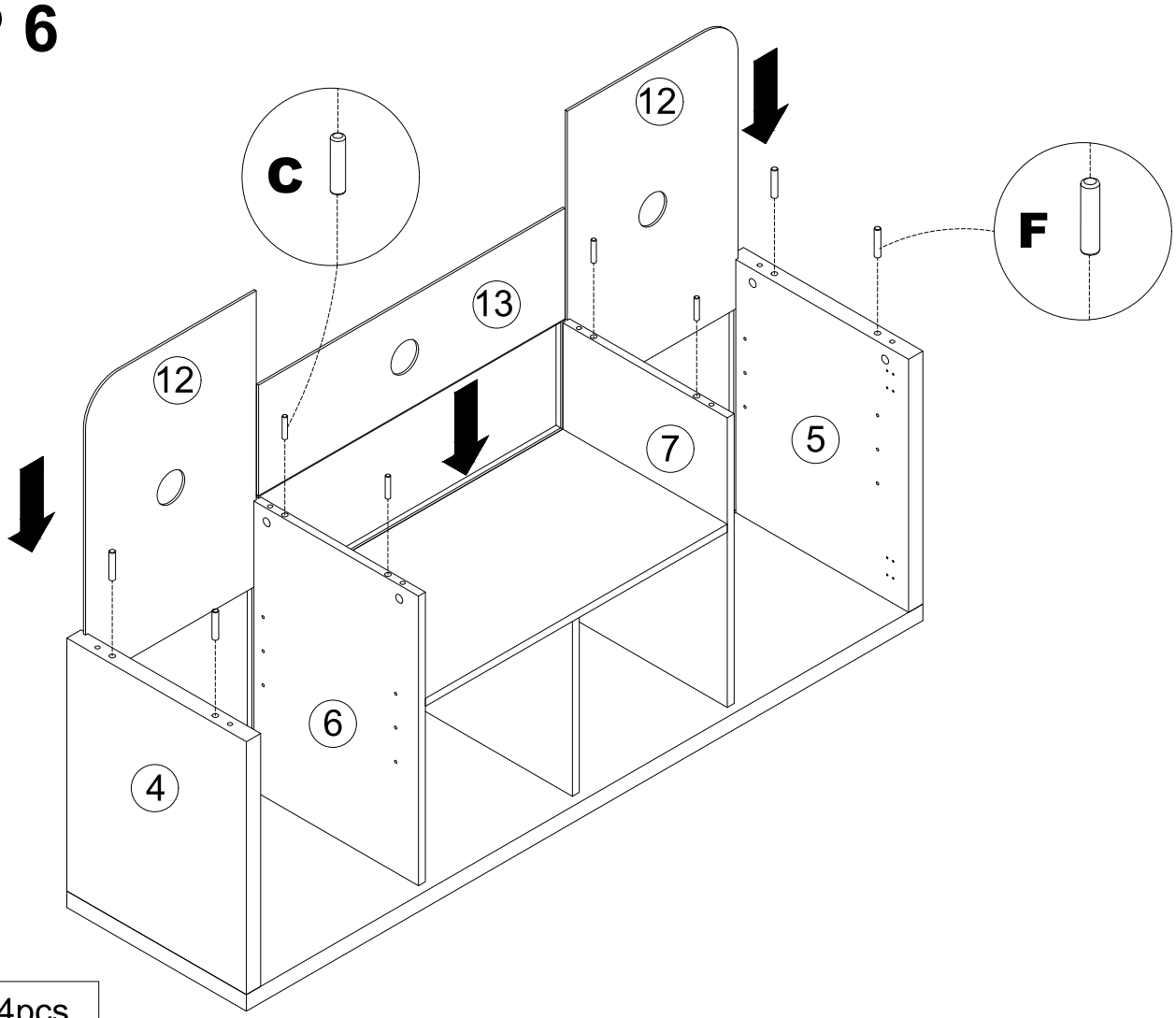

	C x 4pcs
	F x 4pcs

STEP 7

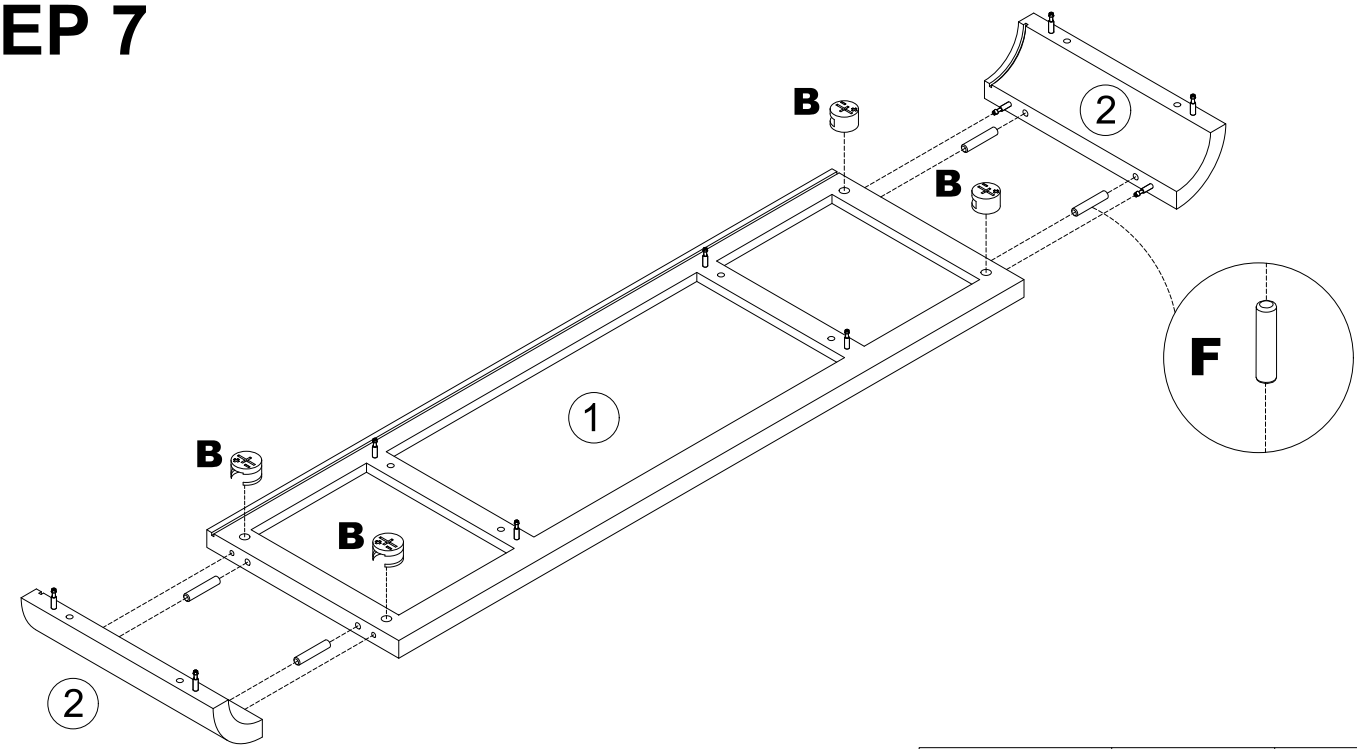

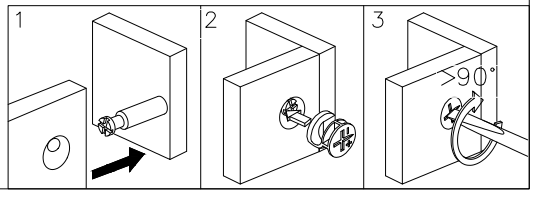

	F x 4pcs
	B x 4pcs

STEP 8

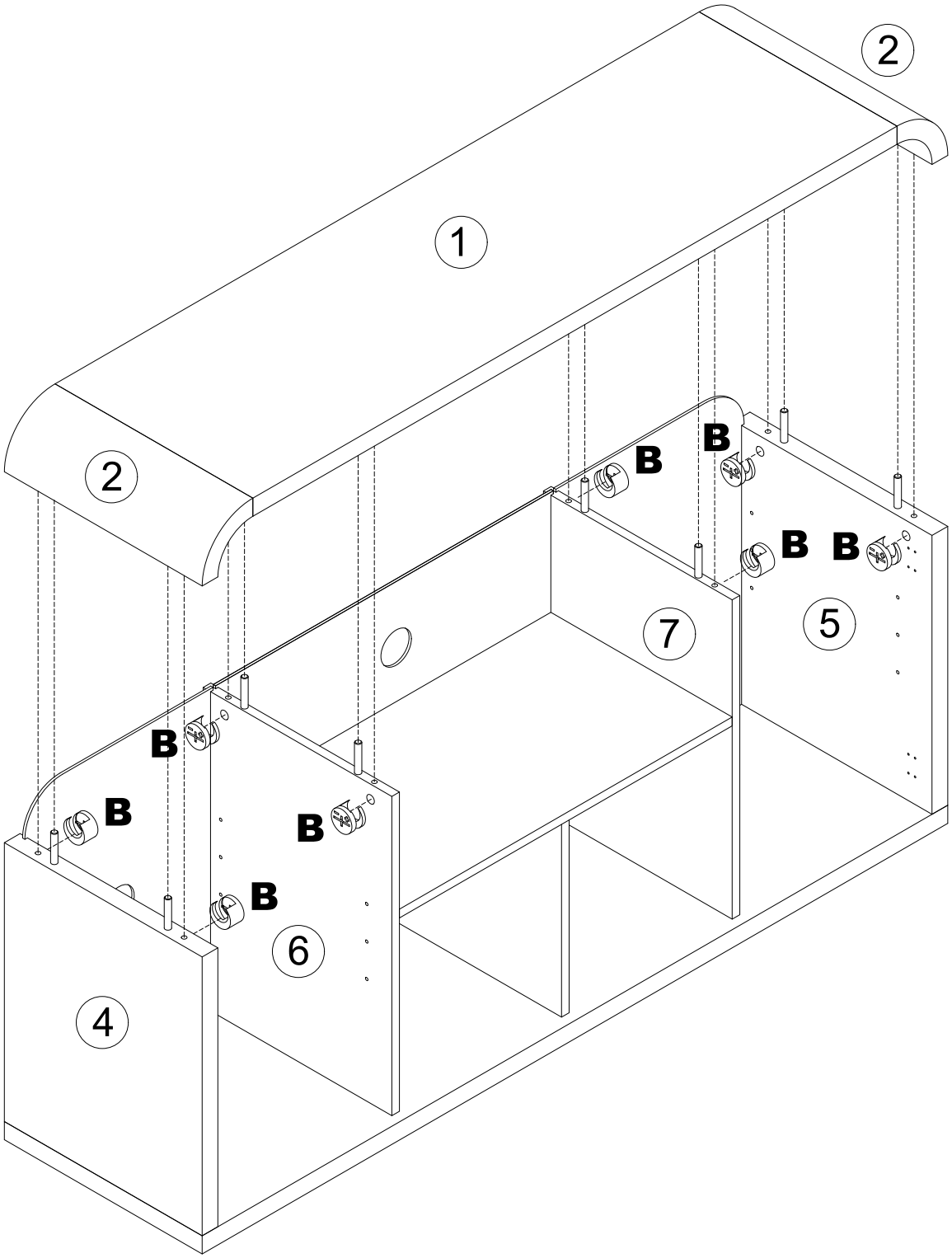

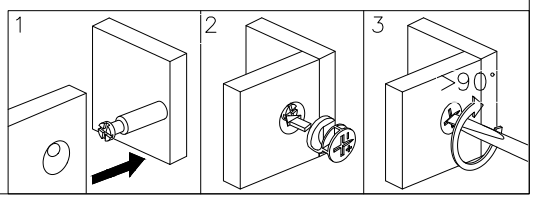

	B x 8pcs

STEP 9

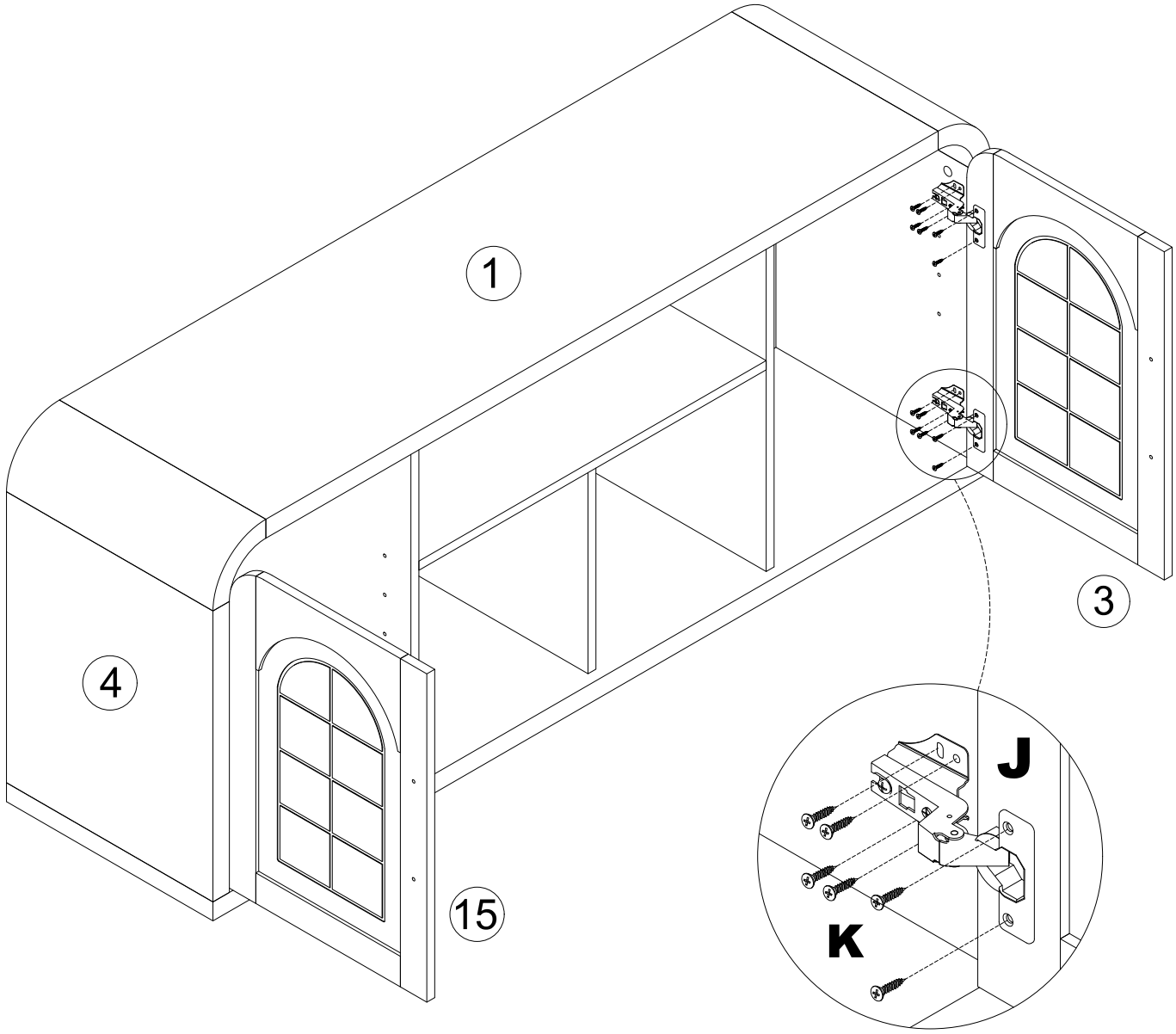

	**K** x 24pcs
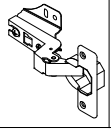	**J** x 4pcs

STEP 10

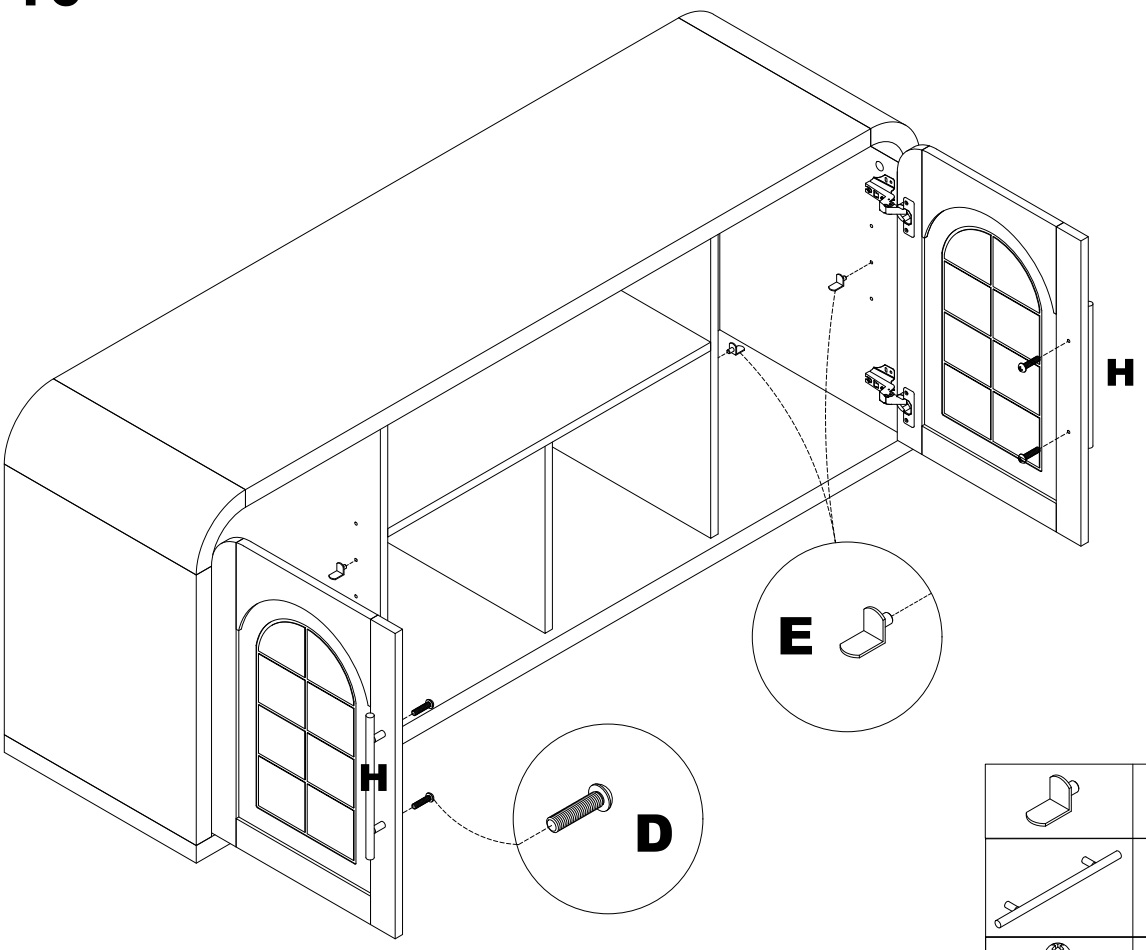

	E x 8pcs
	H x 2pcs
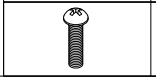	**D** x 4pcs

STEP 11

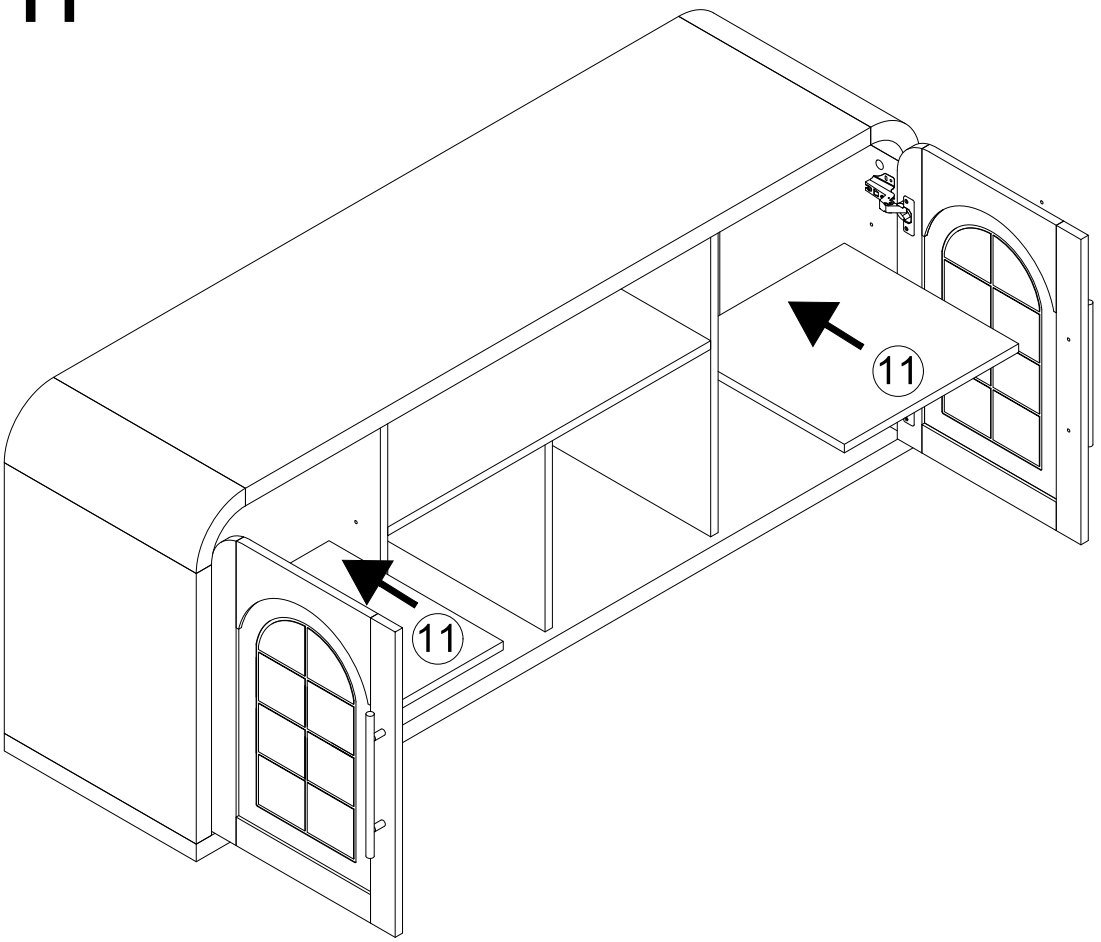

STEP 12

Be sure to install back plate buckle to prevent the cabinet from shaking.

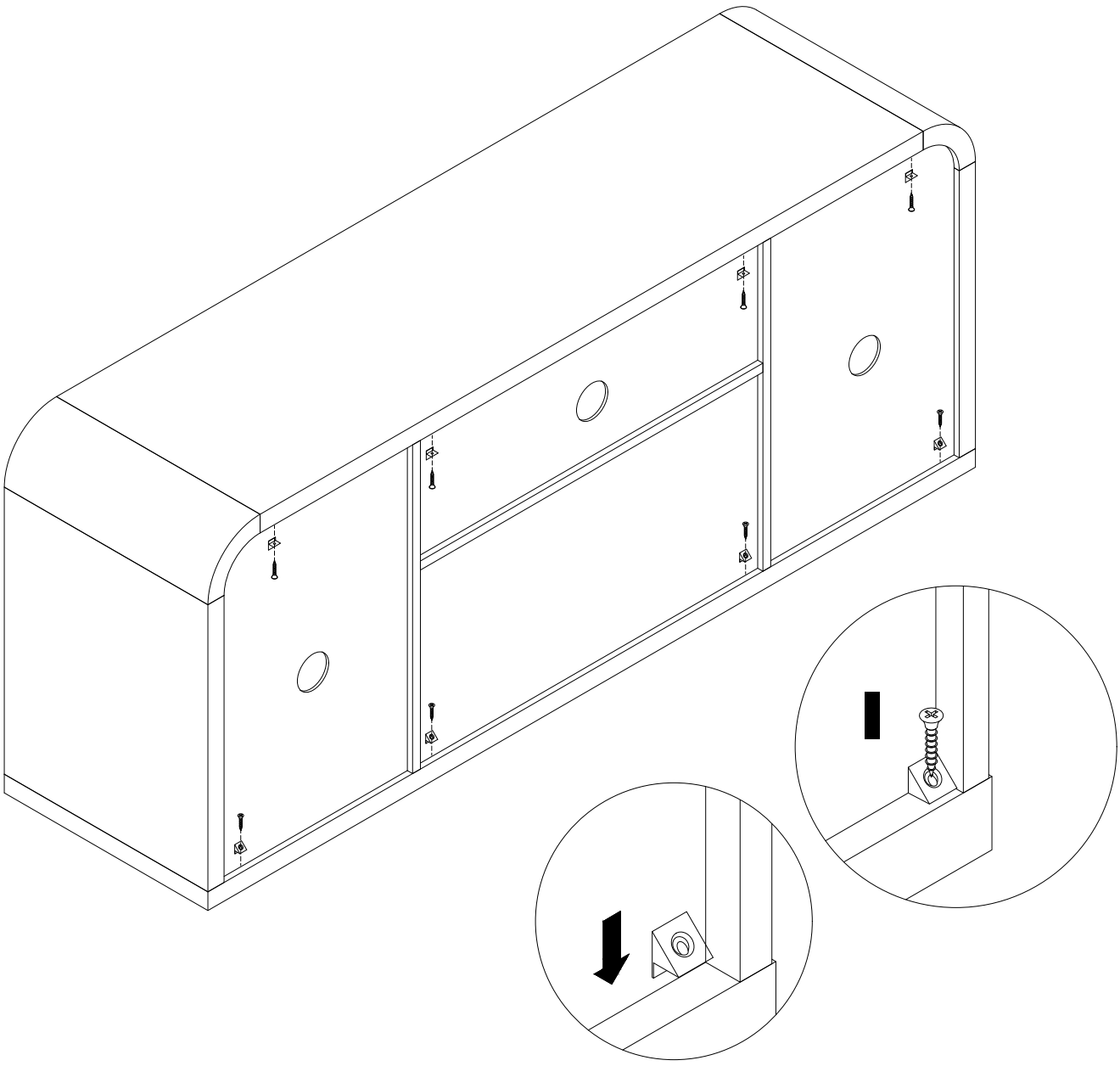



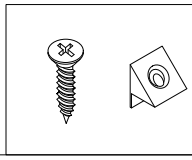

x 8sets