SORBUS™

Bamboo Corner Shower Bench

Assembly Instructions

Thank you for your purchase. Please reference assembly instructions before use. Make sure all parts are present and place them side by side for easy identification.

Tool(s) Recommended: Electric Drill or Phillips Screwdriver

Package Contents:

A Bottom Board

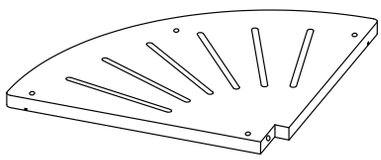

1PC

B Top Board

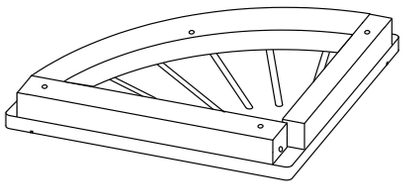

1PC

C Frame Leg

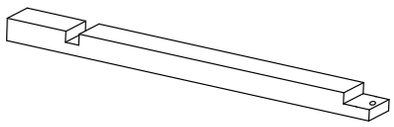

4PCS

D Screw

8PCS

E Screw Socket

8PCS

F Hex Wrench

1PC

1

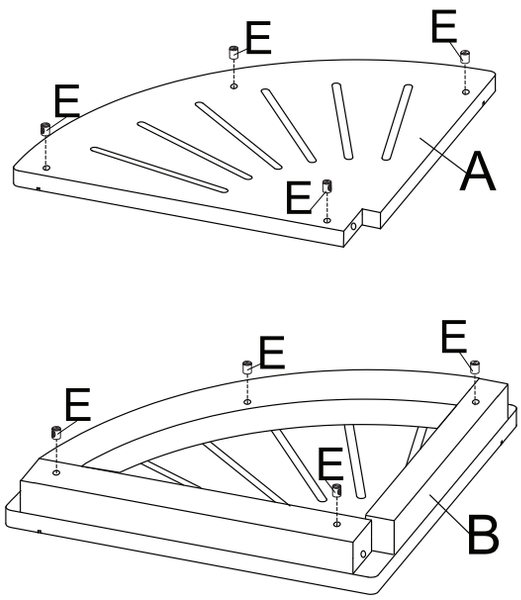

Step 1: Insert screw sockets (E) into the bottom board (A) as shown. Then insert screw sockets (E) into the top board (B) as shown.

2

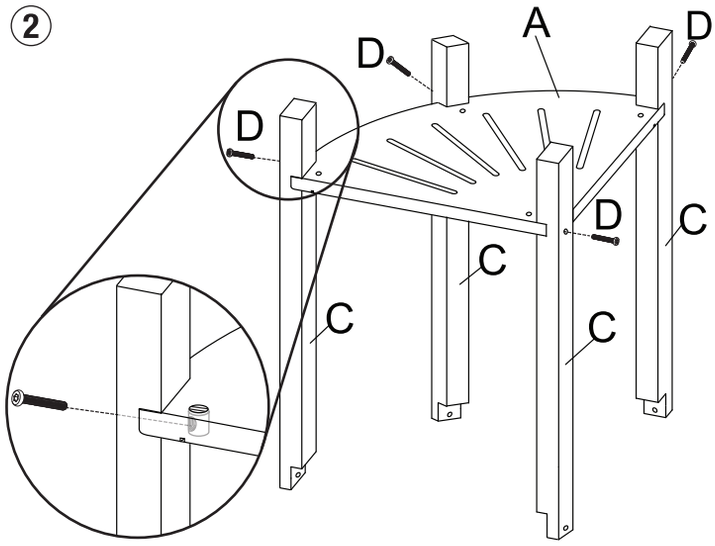

Step 2: Insert screw (D) through frame leg (C) and bottom board (A). Twist screw (D) into screw socket (E) and tighten with hex wrench (F). **PLEASE NOTE:** If the screw (D) isn't turning check to make sure the screw socket (E) is facing the right direction.

3

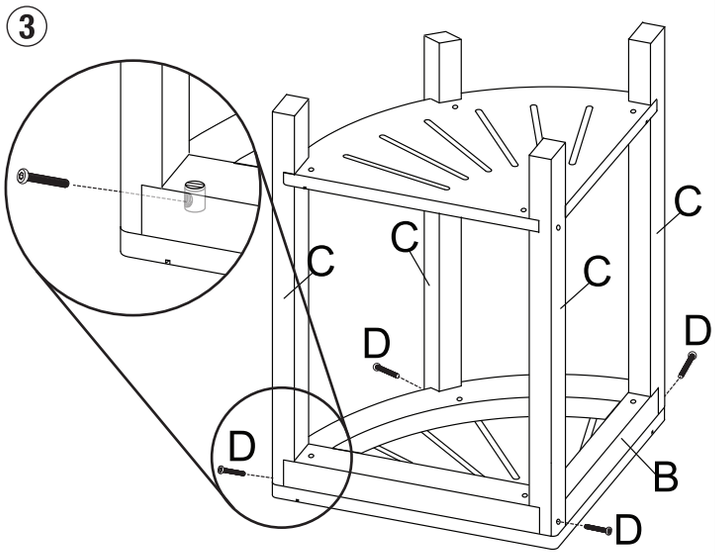

Step 3: Insert screw (D) through frame leg (C) and top board (B). Twist screw (D) into screw socket (E) and tighten with hex wrench (F). **PLEASE NOTE:** If the screw (D) isn't turning check to make sure the screw socket (E) is facing the right direction.

4

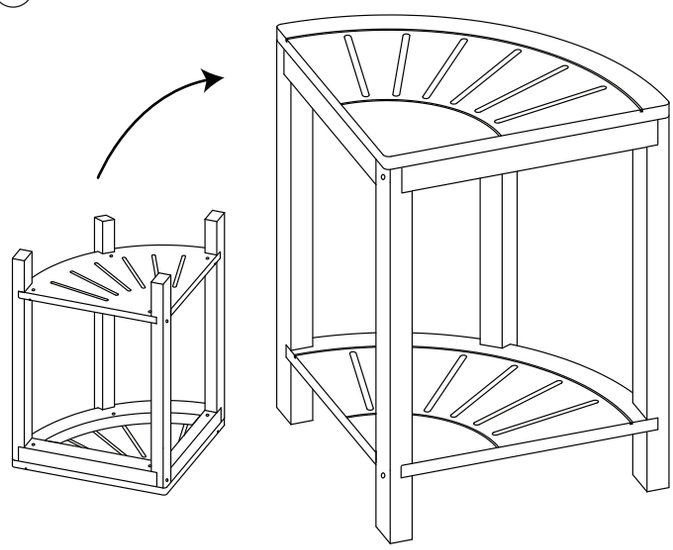

Step 4: Turn over assembled shelf. After making sure everything is secured, you can start to use the unit. Enjoy!