LAVA HEAT ITALIA

THE OPUS LITE

RAVELLO
LOUNGE HEATER

LHI-OPUS-LITE

OWNER'S MANUAL

SHIPS ASSEMBLED · FINAL SETUP REQUIRED

OUTDOOR PATIO HEATER · LIQUID PROPANE OR NATURAL GAS

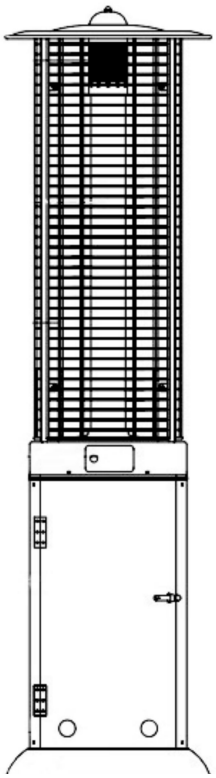

DANGER

If you smell gas:
1. Shut off gas to the appliance.
2. Extinguish any open flame.
3. If odor continues, keep away from the appliance and immediately call your gas supplier or fire department.

EST. 2001 · LOS ANGELES

WELCOME

Thank you for choosing Lava Heat Italia.

Our founder discovered the original flame tower in Italy and brought it to America, selling the first one door to door to restaurants in Beverly Hills. That heater became a collection, and the collection became a company specified today by Forbes Five-Star hotels, Michelin-starred restaurants, and hospitality groups in more than fifty countries.

We have never been content to import what already exists. Every heater we build is designed here and engineered to be measured — which is why we publish TruBTU™, our own verification standard for what a heater actually delivers at distance, rather than the theoretical output printed on a specification sheet.

The Opus Lite is the Opus refined: the same borosilicate glass flame column and Italian engineering, with manual Clima-Comfort controls and a lighter, slimmer build. It arrives assembled and needs only a few minutes of setup; the pages that follow cover unpacking, setup, fuel connection, safe operation and care. Please read this manual before you begin, and keep it for reference.

LAVA HEAT ITALIA

DANGER — CARBON MONOXIDE HAZARD

This appliance can produce carbon monoxide, which has no odor. Using it in an enclosed space can kill you. Never use this appliance in an enclosed space such as a camper, tent, car or home.

WARNING

Do not store or use gasoline or other flammable vapors and liquids in the vicinity of this or any other appliance. A propane cylinder not connected for use shall not be stored in the vicinity of this or any other appliance.

WARNING

Improper installation, adjustment, alteration, service or maintenance can cause property damage, injury or death. Read the installation, operation and maintenance instructions thoroughly before installing or servicing this equipment.

WARNING: FOR OUTDOOR USE ONLY

CSA/ANSI Z83.26 · CSA 2.37 — GAS-FIRED OUTDOOR INFRARED PATIO HEATERS

SPECIFICATIONS

Model	**The Opus Lite (LHI-OPUS-LITE)**
Input rating	**32,000 BTU/hr**
Heat radius / coverage	**6 ft · approx. 113 sq ft**
TruBTU™ comfort zone, 50°F evening	**74° at 2 ft · 66° at 4 ft · 60° at 6 ft**
Fuel	**Liquid propane or natural gas — set at the factory**
Manifold pressure	**LP 11 in W.C. · NG 7 in W.C.**
Inlet supply pressure (LP)	**5 psi min · 250 psi max**
Ignition	**Electronic pilot ignition, with manual Clima-Comfort controls**
Safety	**Flame failure device (thermocouple)**
Run time	**Approx. 12 hours per 20 lb cylinder (LP)**
Dimensions	**22 × 22 × 81.5 in · 64 lb**
Materials	**Borosilicate glass flame tube · marine-grade 6061-T6 aluminum**
Certification	**CSA certified to ANSI Z83.26 and CSA 2.37**
Minimum clearances	**36" from the sides · 36" from the top**
Packaged	**22.5 × 22.5 × 49.5 in · 66 lb**

SAFETY INFORMATION

Please read and understand this entire manual before attempting to assemble, operate or install the product. Keep this manual for future reference and to educate new users of this product. This manual should be read in conjunction with the labeling on the product. Safety precautions are essential when any mechanical or gas-fueled equipment is involved, and are necessary when using, storing and servicing.

Installation of this appliance at altitudes above 2000 ft (610 m) shall be in accordance with local codes, or in the absence of local codes, ANSI Z223.1/NFPA 54 or CSA B149.1.

CLEARANCES

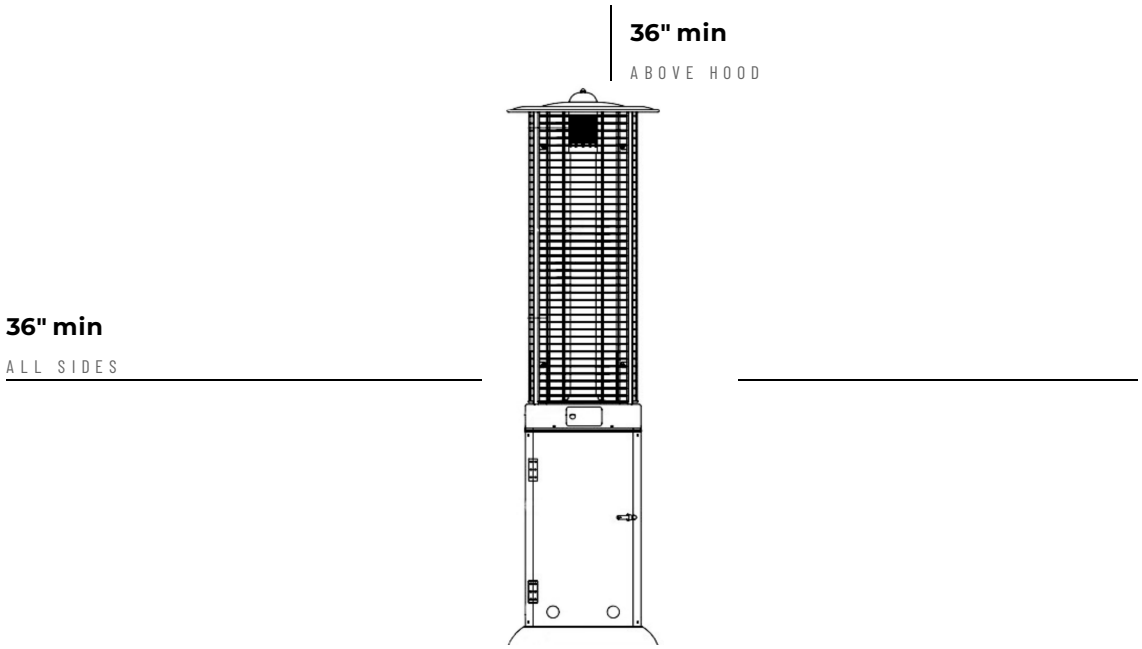

Minimum clearances from any combustible surface or material.

CODES AND STANDARDS

United States	Installation must conform with local codes or, in their absence, with the National Fuel Gas Code, ANSI Z223.1/NFPA 54.
Canada	Installation must conform with the Natural Gas and Propane Installation Code, CSA B149.1, or the Propane Storage and Handling Code, B149.2.
Cylinder standard	Cylinders must comply with U.S. DOT specifications for LP-gas cylinders or CAN/CSA-B339, with a listed Overfilling Prevention Device (OPD) and a protective collar around the valve.

DANGER — CARBON MONOXIDE HAZARD

This heater is a combustion appliance. All combustion appliances produce carbon monoxide during combustion. Used and maintained in accordance with all warnings and instructions, this product produces extremely minute, non-hazardous amounts. Do not block air flow into or out of the heater. Carbon monoxide poisoning produces flu-like symptoms, watery eyes, headaches, dizziness, fatigue and possibly death. You cannot see it and you cannot smell it. If these symptoms are present during operation, get fresh air immediately. For outdoor use only.

DANGER — EXPLOSION AND FIRE HAZARD

Keep solid combustibles such as building materials, paper or cardboard a safe distance from the heater. Provide adequate clearances around air openings into the combustion chamber. Never use the heater in spaces which contain volatile or airborne combustibles. Minimum clearances from combustible materials: 36" (91 cm) from the sides and 36" (91 cm) from the top.

DANGER — PROPANE STORAGE

Never store propane near high heat, open flames, pilot lights, direct sunlight or where temperatures exceed 120°F (49°C). Propane vapors are heavier than air and can accumulate in low places. If you smell gas, leave the area immediately. Never install or remove a cylinder while the heater is lit, near a flame, or while it is hot to touch. Store the cylinder outdoors in a well-ventilated space out of reach of children.

WARNING — BURN HAZARD

Never leave the heater unattended when hot or in use, and keep it out of reach of children. Alert children and adults to the hazards of high surface temperatures. Do not touch or move the heater for at least 45 minutes after use. Do not hang clothing or other flammable materials from the heater.

WARNING — CALIFORNIA PROPOSITION 65

This product can expose you to chemicals including carbon monoxide, which is known to the State of California to cause birth defects or other reproductive harm. For more information go to www.P65Warnings.ca.gov.

WARNING — SMALL BATTERIES

This product contains a small battery. Swallowed batteries can cause a choking hazard. Seek immediate medical attention if a battery is swallowed or inhaled. Keep children away from small batteries.

CAUTION — SERVICE SAFETY

Keep all connections and fittings clean and make sure the cylinder valve outlet is clean. During assembly, check all connections and fittings for leaks using soapy water — never use a flame. Use as a heating appliance only. Never alter it in any way.

CAUTION — SHELTER

An appliance may be installed with shelter no more inclusive than: (a) with walls on all sides but no overhead cover; (b) within a partial enclosure with an overhead cover and no more than two side walls; or (c) within a partial enclosure with an overhead cover and three side walls, as long as 30 percent or more of the horizontal periphery is permanently open.

PACKAGE CONTENTS

The Opus Lite arrives assembled on its base plate. The wheel kit and its hardware are packed loose. Remove all transit protection — foam, cardboard and wrap — and check that the heater is undamaged before you begin. If anything is missing or damaged, do not use the heater — contact Lava Heat Italia.

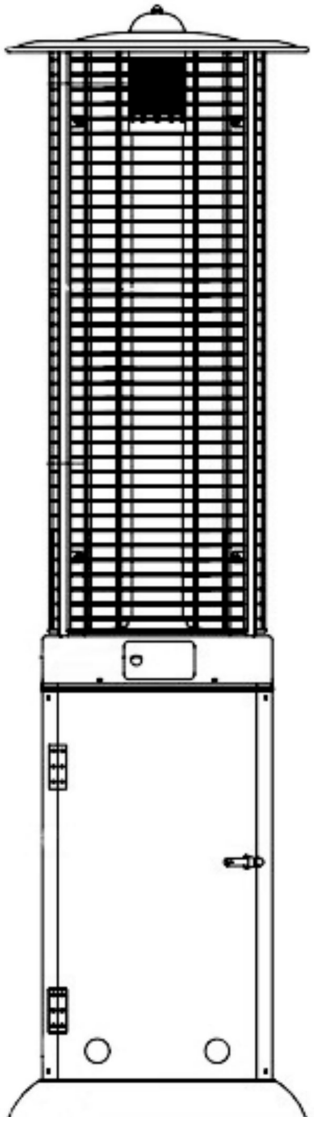

Opus Lite heater, assembled	**1**
K · Wheel kit	**1**
Gas hose and regulator (LP), fitted	**1**
Owner's manual	**1**

Not supplied: a standard 20 lb (9 kg) propane cylinder. A protective cover is sold separately.

HARDWARE CONTENTS

Verify all hardware is present before setup. Letters match the factory hardware bag and the steps that follow.

EE · Bolt Ø10 × 15 mm	**2**
HH · Nut M8	**2**
OO · Wrench	**1**

A wrench (OO) is supplied. A Phillips screwdriver with a medium blade and leak-check solution are required and are not supplied. The four protective-guard screws (MM, Ø8 × 10 mm) come fitted to the heater.

SETUP

Estimated time: approximately 10 minutes. Work on a clean, level surface. Step 1 removes the transit protection from the glass tube, step 2 fits the wheel kit, and step 3 routes the gas hose. The propane connection follows on the fuel page.

1 Remove the transit protection

Unscrew the four screws (MM) holding one of the three protective guards (D), and lift the guard off its support slots.

Carefully remove all bubble wrap and foam from around the borosilicate glass tube in the centre of the heater.

Hang the guard back on its upper support slots and refit all four screws (MM).

Handle the glass tube with care. Never operate the heater with a guard removed.

HARDWARE USED

MM	Screw Ø8 × 10 mm (fitted)	**× 4**

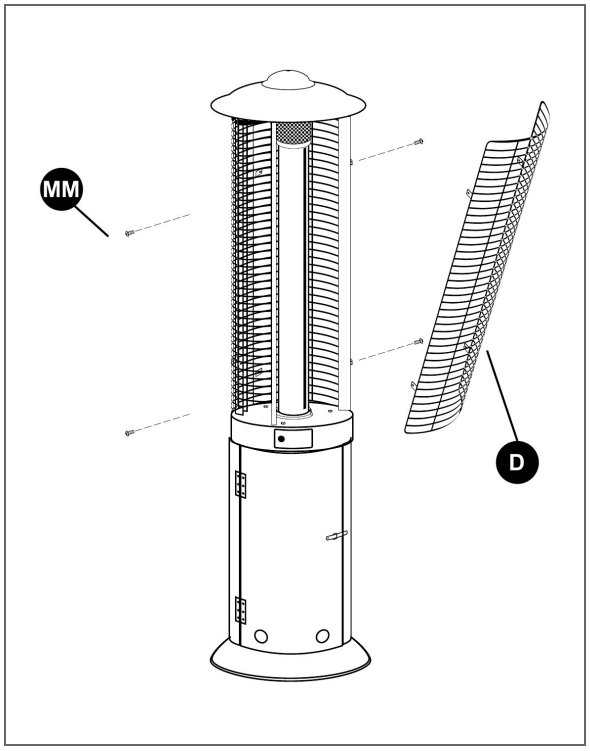

2 Fit the wheel kit

Insert two Ø10 × 15 mm bolts (EE) through the wheel kit (K) and the base plate (L).

Secure with two M8 nuts (HH), tightening with the supplied wrench (OO).

HARDWARE USED

EE	Bolt Ø10 × 15 mm	**× 2**
HH	Nut M8	**× 2**

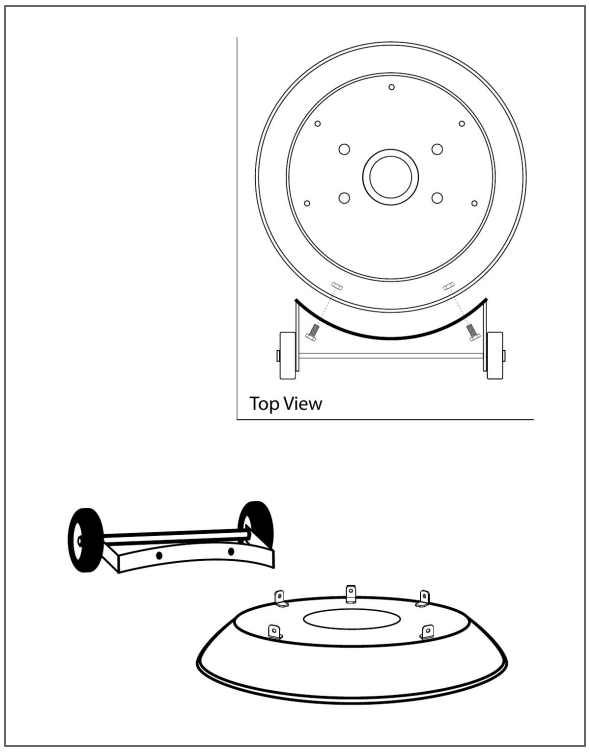

3 Route the gas hose

Propane only: route the gas hose so it hangs clear inside the cabinet and cannot touch any hot surface.

If the hose touches a high-temperature surface it may melt and leak, causing a fire.

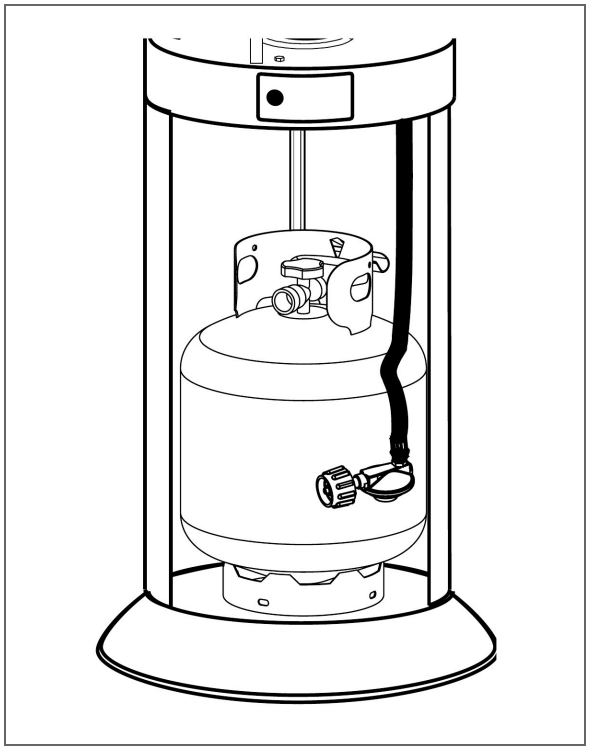

RAVELLO
LOUNGE HEATER

THE OPUS LITE

32,000 BTU/HR

A 6 ft radius of directed warmth — roughly 113 sq ft of usable comfort.

Clima-Comfort Controls

Pilot ignition with manual variable control, low through to high.

A Column of Flame

A borosilicate glass tube carries a full-height flame inside a stainless guard.

Built for Salt Air

Marine-grade 6061-T6 aluminum, 500 hours of ASTM B117 salt-spray testing.

Concealed Cylinder

The 20 lb tank sits out of sight behind the front door.

Twelve Hours

A full evening's run, twice over, from a single 20 lb cylinder.

COMFORT ZONE
ON A 50°F EVENING

TRUBTU

2 FT	4 FT	6 FT
74°	66°	60°

6 FT RADIUS

Frame and structure carry a lifetime limited warranty.

FUEL CONNECTION — PROPANE

For units configured for liquid propane (LP). If your Opus Lite is configured for natural gas, turn to the next page. Check the rating plate inside the cylinder enclosure to confirm the fuel before you connect any supply.

4 Connect the propane cylinder

Open the front door panel (J) and stand a standard 20 lb (9 kg) propane cylinder inside the cabinet.

Screw the regulator onto the cylinder valve and tighten by hand. Do not cross-thread the connection.

Make sure the hose does not touch any hot surface, leak test every connection, then close the door.

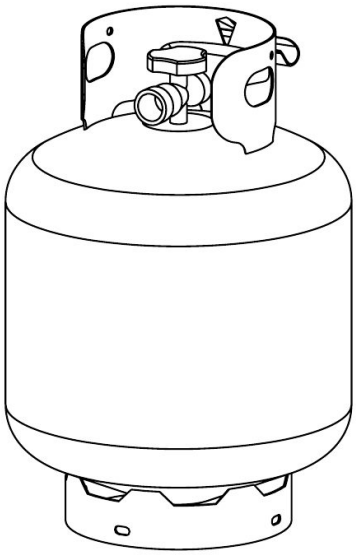

Standard 20 lb. tank

CYLINDER REQUIREMENTS

· Standard 20 lb (9 kg) propane vapor-withdrawal cylinder, constructed and marked per U.S. DOT specifications for LP-gas cylinders, or CAN/CSA-B339.

· Listed Overfilling Prevention Device (OPD), a protective collar around the valve, and a connection compatible with the appliance.

· Never use a dented, rusted or damaged cylinder. Never fill a cylinder beyond 80% of capacity.

· Storage of the heater indoors is permissible only if the cylinder is disconnected and removed. Store cylinders outdoors, out of reach of children, with dust caps fitted.

NATURAL GAS INSTALLATION

Natural-gas units connect to a fixed supply line; no cylinder is used.

PROFESSIONAL INSTALLATION ONLY

Connection to the natural-gas supply must be made by a qualified, licensed gas technician in accordance with local codes — or, in their absence, ANSI Z223.1/NFPA 54 (US) or CSA B149.1 (Canada).

INSTALLATION REQUIREMENTS

· Supply pressure: 7 in W.C. nominal natural gas at the appliance inlet.

· Use only the natural-gas hose, regulator and fittings supplied or specified by Lava Heat Italia for this model.

· Install a dedicated, accessible manual shut-off valve in the supply line within reach of the heater.

· Route the hose so it cannot be strained, pinched or touched by hot surfaces, and secure the heater so the connection cannot be pulled.

· Leak test every joint made during installation before first lighting (see Leak Check).

· Purge air from the supply line at first start, then follow the lighting procedure.

OPERATING ON NATURAL GAS

Lighting, operation and care are the same as for propane once the supply is connected. Wherever this manual says to open or close the cylinder valve, open or close your supply shut-off valve instead. Close the shut-off valve whenever the heater is not in use and before any cleaning or service.

WARNING — NO FIELD CONVERSION

Fuel configuration is set at the factory. Never connect a natural-gas unit to propane, or a propane unit to natural gas — the injector and valve are fuel-specific. Confirm the fuel on the rating plate inside the cylinder enclosure before connecting any supply.

LEAK CHECK

Check every gas connection you make — hose, regulator and cylinder — before first use, after connecting a new cylinder, and whenever a connection has been loosened or removed. Perform all leak tests outdoors, extinguish all open flames and never smoke while testing.

1. Make 2–3 oz of leak check solution — one part liquid dish soap to three parts water.

2. Make sure the heater is OFF.

3. Apply several drops of solution where the hose attaches to the regulator and where the regulator connects to the cylinder (LP) — or to every joint made during installation (NG).

4. Open the cylinder valve (LP) or supply shut-off valve (NG) and look for bubbles.

If bubbles appear at any connection there is a leak. Close the gas immediately. If the leak is at the hose-to-regulator connection, tighten it and test again; if bubbles continue, contact Lava Heat Italia for a replacement hose. If the leak is at the regulator-to-cylinder connection, disconnect, reconnect and test again; if bubbles persist, the cylinder valve is defective and the cylinder should be returned to its place of purchase. Whenever gas connections are loosened or removed, perform a complete leak test.

BEFORE TURNING THE GAS ON

· The heater is outdoors, on a level surface, with the clearances on page 4.

· The surrounding area is free of combustible materials, gasoline and other flammable vapors or liquids, and nothing obstructs air ventilation.

· All gas connections are tight and leak-free, the cylinder enclosure is clear of debris, and any component removed during assembly or service is refitted.

· The heater has been inspected before use. If relighting a hot heater, always wait at least 5 minutes.

LIGHTING

The Opus Lite has a pilot flame that must be lit before the main burner. The control panel carries the igniter button and the variable control knob.

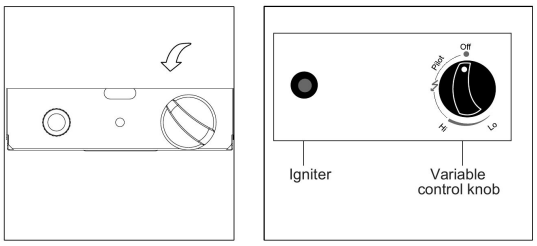

A. Turn the control knob to OFF.

B. Open the cylinder valve (LP) or supply shut-off valve (NG) fully.

C. Push the control knob in and turn it to PILOT. For the first start, or after any cylinder change, hold it in for 2 minutes to purge air from the line.

D. Keeping the knob pressed, push and release the igniter button until the pilot flame is visible through the glass tube.

E. Once the pilot is lit, keep the knob pressed for 30 seconds, then release.

F. Push in and turn the knob to HIGH. For less heat, push in and turn further counter-clockwise to LOW.

If the pilot does not stay lit, repeat steps C to E. If the igniter fails, push in and turn the knob to PILOT and, while holding it, light the pilot with a long-stem lighter through the glass tube. Holding the knob in for more than 20 seconds before the gas ignites can cause a ball of flame. If the pilot goes out, close all valves and wait at least 5 minutes before relighting.

Smoke and odor from manufacturing oils are normal on first use and clear in about 30 minutes. The burner may be noisy at first; turn to PILOT, then to the heat you want. In normal operation the flame is two-thirds the height of the glass tube on HIGH and one-third on LOW, stable and bright, with no thick black smoke.

SHUT DOWN

A. Push in and turn the control knob to OFF.

B. Close the cylinder valve (LP) or supply shut-off valve (NG), and disconnect the cylinder when the heater is not in use.

Allow a 5-minute complete shut-off period before relighting. Do not touch, move or cover the heater until it has cooled, approximately 45 minutes.

CARE AND MAINTENANCE

Keep exterior surfaces clean using warm soapy water and a soft cloth. Never use flammable or corrosive cleaning agents. Keep the area around the burner and pilot assembly dry at all times. Do not submerge the control valve; if the gas control is submerged in water it must be replaced.

Keep the appliance area clear of combustible materials. Do not obstruct the flow of combustion and ventilation air. Keep the ventilation openings of the cylinder enclosure free of debris, and keep controls, burner and air passageways clean.

Spiders and insects can nest in the burner or orifices. This dangerous condition can damage the heater and render it unsafe. Clean burner holes with a heavy-duty pipe cleaner; compressed air may help clear smaller particles. Clean the reflector and burner screen with warm soapy water if carbon deposits develop.

In a salt-air environment corrosion occurs more quickly than normal. Check for corroded areas frequently and repair them promptly. A fitted cover is strongly recommended. Inspect the entire hose assembly at least annually for abrasion, cuts or wear, and leak test any suspect areas.

Clean the borosilicate glass tube only when the heater is completely cool, following the transit-protection step to remove one guard; handle the tube with care.

Between uses, turn the control knob off, disconnect the cylinder (LP) or close the supply shut-off (NG), and store the heater upright in an area sheltered from inclement weather. Wait until the heater is completely cool before covering. Never leave a propane cylinder exposed to direct sunlight or excessive heat.

Only a qualified service person should repair gas passages and associated components. Always allow the heater to cool before attempting service, and use only the regulator, hose and replacement parts specified by Lava Heat Italia.

TROUBLESHOOTING

PROBLEM	POSSIBLE CAUSE	CORRECTIVE ACTION
Pilot will not light	Cylinder valve is closed	Open the valve
	Blockage in orifice or pilot tube	Clean or replace the orifice or pilot tube
	Air in the gas line	Purge the line for 1–2 minutes as described in Lighting
	Low gas pressure	Turn the cylinder valve OFF and replace the cylinder
	Igniter fails	Light with a long-stem lighter through the glass tube; replace the igniter
Pilot will not stay lit	Dirt built up around the pilot	Clean the area around the pilot
	Loose connection at gas valve or pilot	Tighten the connection and perform a leak check
	Thermocouple not operating correctly	Contact Lava Heat Italia customer service
Burner will not light	Propane cylinder is frosted over	Wait until the cylinder warms up and becomes unfrosted
	Blockage in orifice	Clear the blockage
Burner flame is low	Gas pressure is low	Replace the cylinder
	Below 40°F and cylinder less than 1/4 full	Use a full cylinder
Carbon build-up	Dirt or film on reflector or glass tube	Clean the reflector and glass tube when cool
Thick black smoke	Blockage in burner	Turn off, allow to cool, and clean the burner inside and outside
Yellow flame, uneven glow or popping	Spiders or insects in burner or orifices	Clean the burner and orifices

The heater operates at reduced efficiency below 40°F (5°C).

WARRANTY

Every Lava Heat Italia heater is backed by the Lava Heat Italia warranty program, effective from the date of purchase as shown on the purchaser's receipt.

Frame and structure	**Lifetime limited**
Parts	**5 years limited**
Finish	**5 years limited**
Burner and glass	**1 year limited**
Gas hose and regulator assembly	**1 year limited**

Parts only — labor and freight are not included. Residential and commercial installations are covered on identical terms.

This warranty is valid for the original consumer purchaser. Defects or damage caused by the use of other than genuine parts are not covered. The warranty is void if damage or failure is caused by accident, alteration, misuse, abuse, or incorrect installation or removal. Full terms at lavaheat.com/warranty-and-product-care.

WHEN YOU RECEIVE YOUR PRODUCT

If your product is damaged, requires technical support or replacement parts, or if you have a sales question or product feedback, contact Lava Heat Italia directly.

DO NOT RETURN THIS PRODUCT TO THE RETAILER.

Lava Heat Italia · 940 W. Washington Blvd., Los Angeles, CA 90015
310-559-1700 · customerservice@lavaheat.com · lavaheat.com

REPLACEMENT PARTS

Parts are listed by the letter used throughout this manual. When ordering, quote the model (LHI-OPUS-LITE), the part letter and the finish. Consumable items and items damaged in service are not covered by the warranty.

SERVICE RECORD

Keep this page with the manual. Quote the model and serial number in any correspondence.

Model	**The Opus Lite (LHI-OPUS-LITE)**
Serial number	
Finish	
Fuel	
Date of purchase	
Dealer	
Installed by	

ANNUAL INSPECTION

Date	Carried out by	Notes
Date	Carried out by	Notes
Date	Carried out by	Notes
Date	Carried out by	Notes
Date	Carried out by	Notes
Date	Carried out by	Notes

The heater should be inspected before use and at least annually by a qualified service person. Inspect the entire hose assembly at least annually for abrasion, cuts or wear, and leak test any suspect areas.

LAVA HEAT
ITALIA

LUXURY OUTDOOR HEATING · ESTABLISHED 2001

940 W. WASHINGTON BLVD., LOS ANGELES, CA 90015
310.559.1700 · CUSTOMERSERVICE@LAVAHEAT.COM
LAVAHEAT.COM

THE OPUS LITE · LHI-OPUS-LITE · MADE IN CHINA