ASSEMBLY INSTRUCTION

VANITY SINK BASE CABINET

Estimated Assembly Time: 20 - 30 minutes
2-person assembly recommended

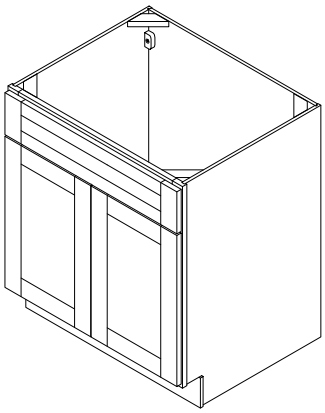

TOOLS REQUIRED

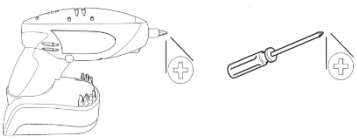

PART	DESCRIPTION	QTY	PART	DESCRIPTION	QTY
A1	Box side panel - left	1	C	Box back panel	1
A2	Box side panel - right	1	D	Face frame & door panel & fake drawer face	1
B	Box bottom panel	1	E	Toe kick panel	1

HARDWARE CONTENTS

BB Counter corner block x 4

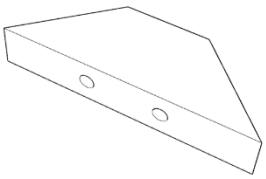

DD Rubber bumper x 4

FF 1” Flat head phillips screw x 11

1

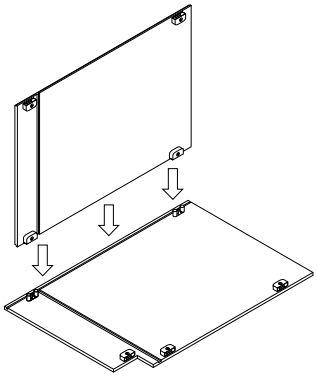

2

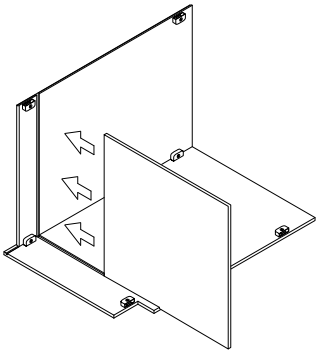

3

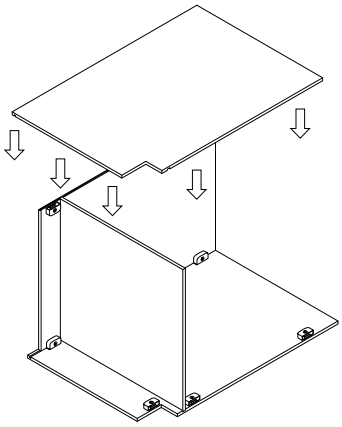

4

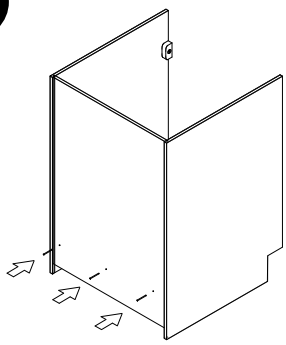

5

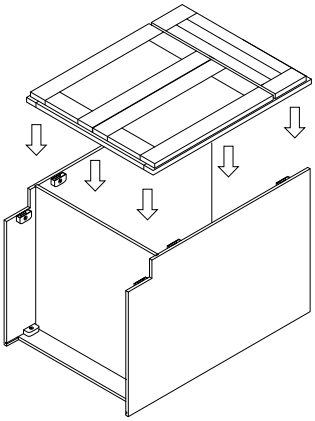

6

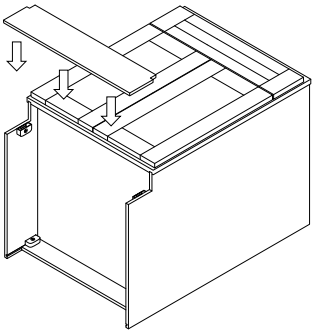

7

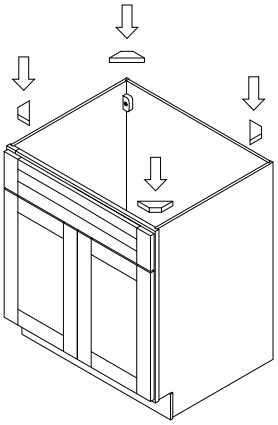

8

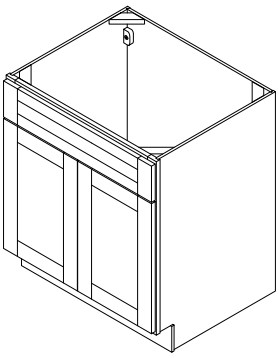

CAMLOCK CONNECTION

1. Insert the camlock to the locker.

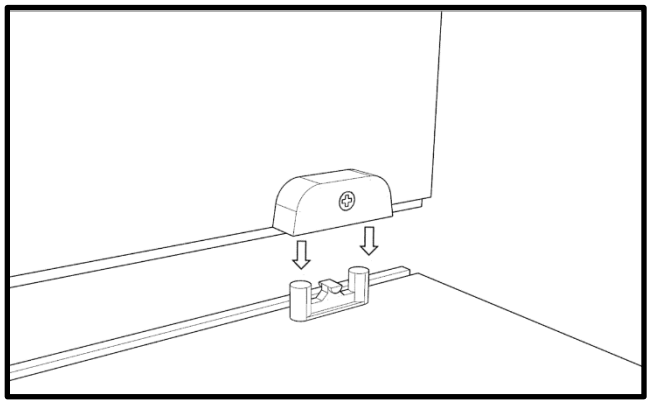

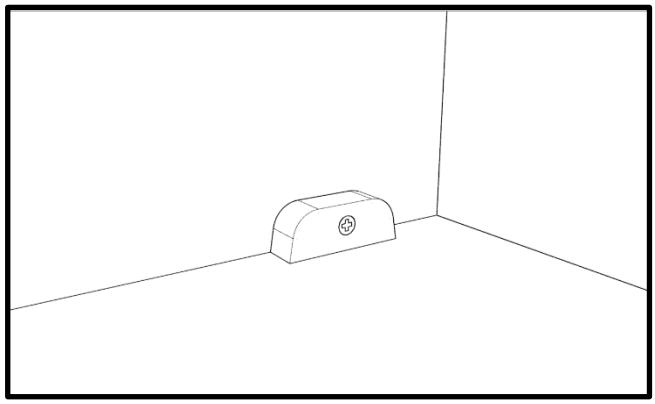

2. Turn the nut clockwise to latch two parts.

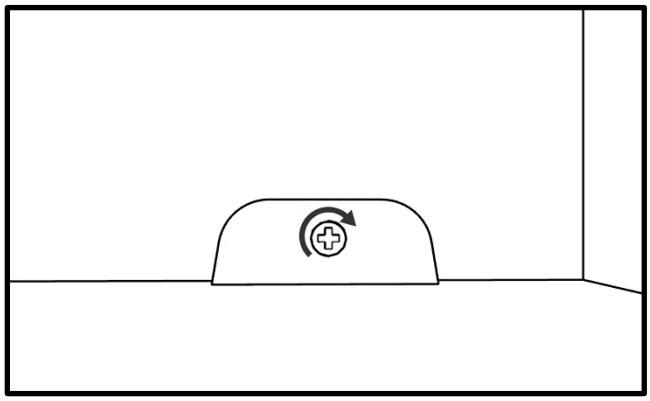

COUNTER CORNER BLOCK INSTALLATION

1. Place one counter corner block at the corner, align it with cabinet box panel. Hold it and use two 1” flat head Phillips screw to install the counter corner block. The use of a screwdriver is recommended.

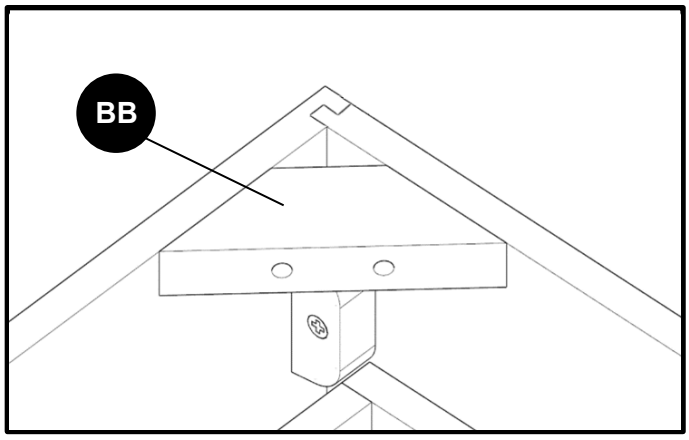

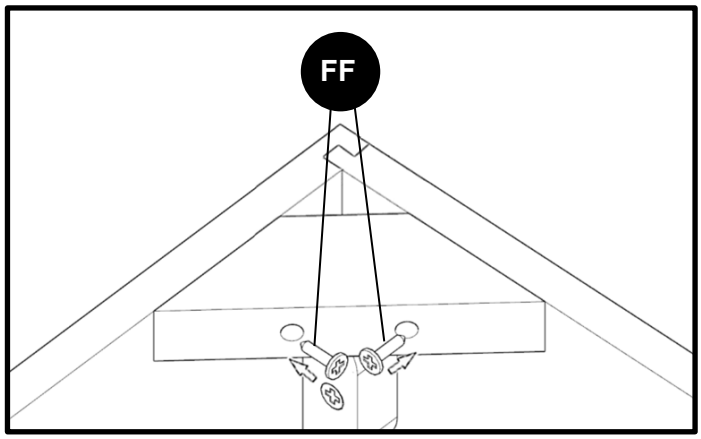

2. Install the other counter corner blocks in the same way.

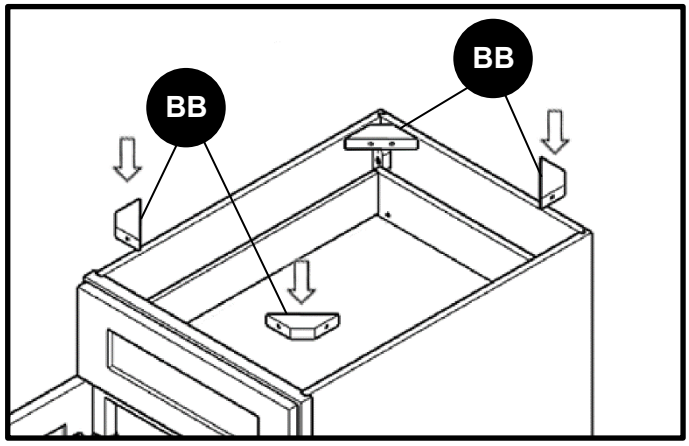

FASTEN BOX BOTTOM PANEL AND BOX BACK PANEL

1. Drill 1” flat head Phillips screw to the predrilled holes and fasten box bottom panel with box back panel

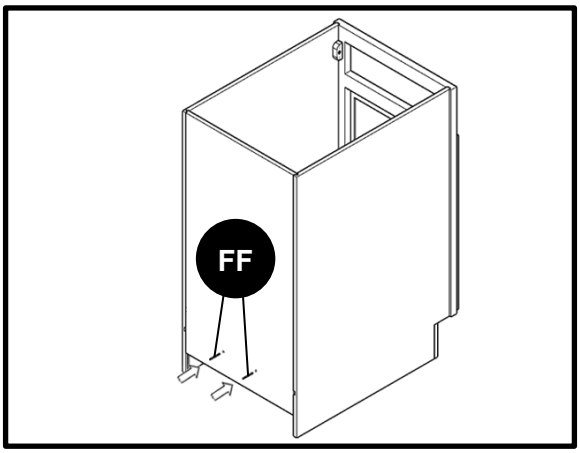

RUBBER BUMPER INSTALLATION
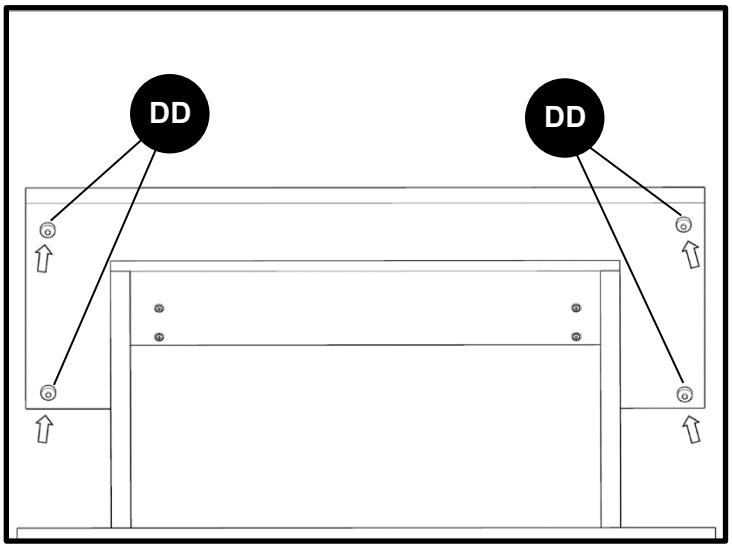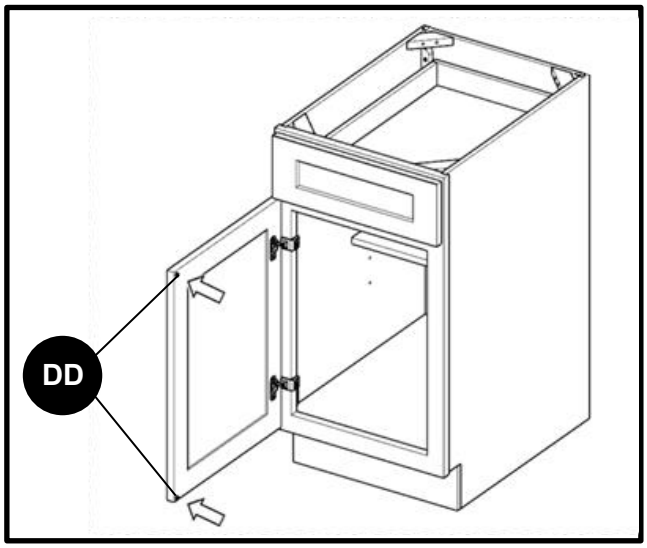
1. Attach rubber bumpers to 4 corners of each drawer face panel and 2 outsider corners of each door panel.