outline drawing:

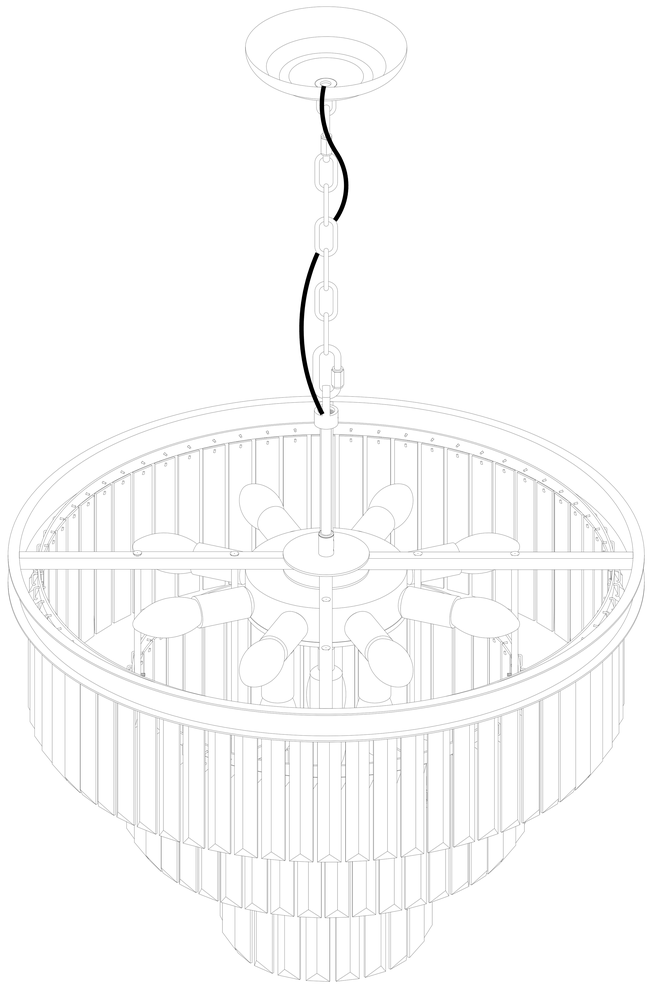

model:

Technical data: Power supply voltage 110-120V, bulb type E12Max40Wx12PCS (not included)

CAUTION

- Before installing the lighting fixtures, please check the insulation of the wires for any cuts, wear, or possible damage during transportation。If the wires are defective, do not attempt installation 。
- In some countries, electrical installation work can only be carried out by authorized electrical contractors。Please contact the local power department for advice。

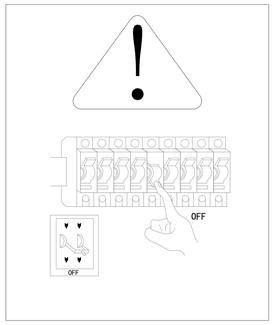

IMPORTANT Before starting the installation work, please make sure to cut off the power supply to the circuit。

IMPORTANT Keep children away from the installation process 。

Required tools (not included):

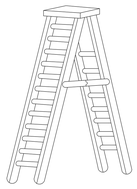

Ladder

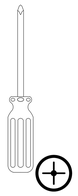

Phillips screwdriver

pincers

Required tools (including):

expension screws

glove

The hardware kit provides:

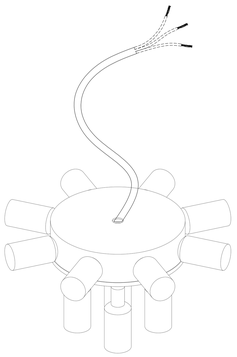

Lights+Ancient

Hanging plate screws

carabiner

mounting screw

ring

CONNECTORS

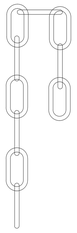

sling chain

tray

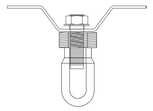

Installation board

Middle tube

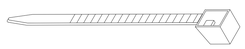

cable tie

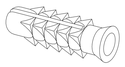

Gecko rubber stopper

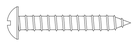

Self tapping screws

2 types of square rows

Long crystal strips -128pcs

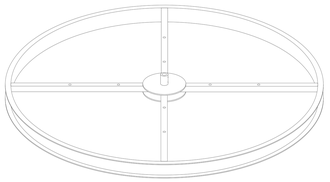

Jointly welded iron ring

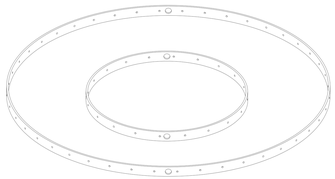

2 types of flat iron rings

• The components displayed on each lamp may vary slightly

step 1

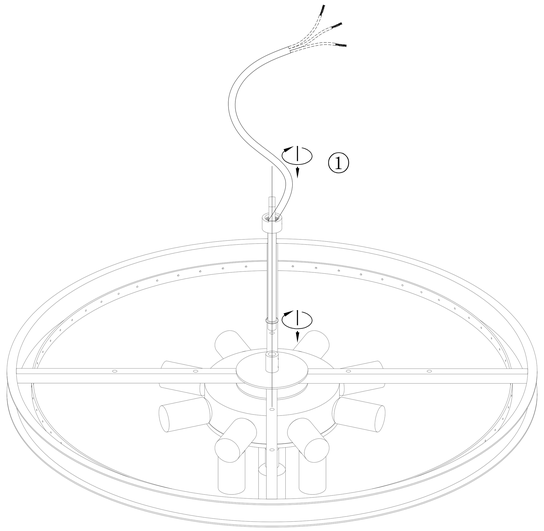

① Middle pipe+welded iron ring+lamp and ancient connection fastening。

Step 2

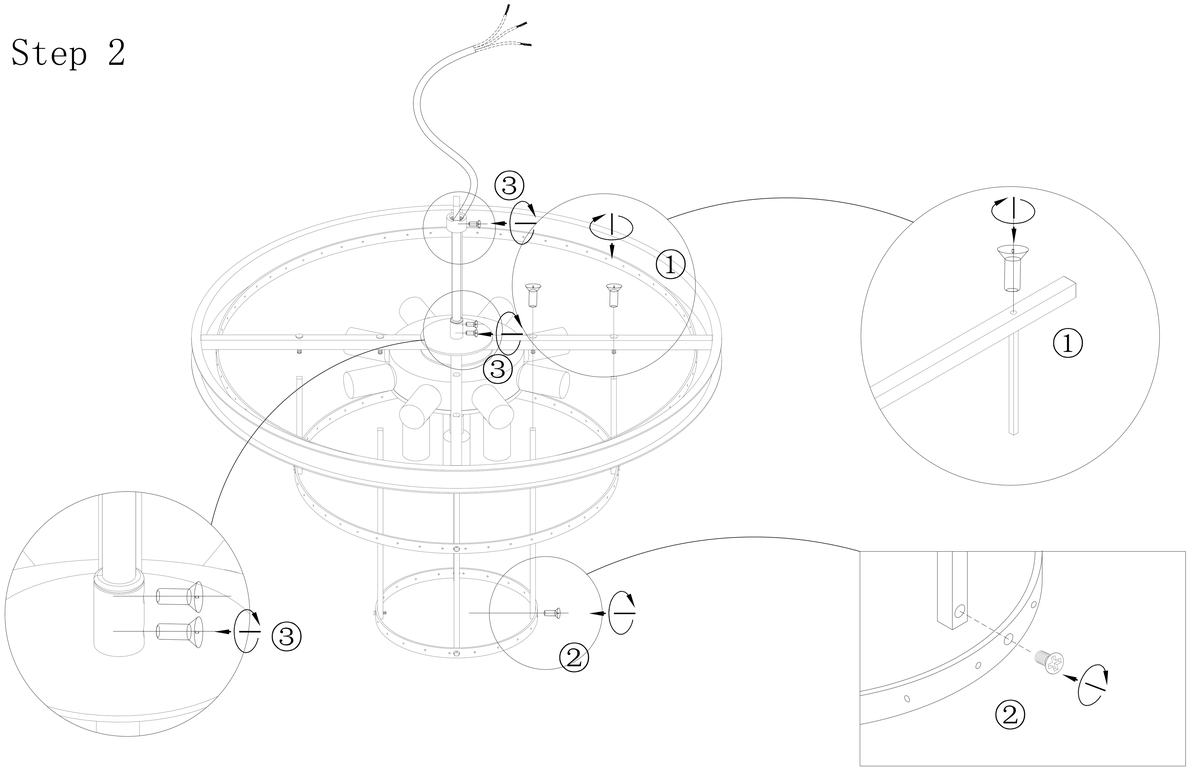

① Thread the screw through the square tube hole in the welded iron ring and connect it tightly to the square row. Refer to this step for the remaining square rows。

② Thread the screw through the flat iron ring and connect it tightly to the square row. Refer to this step for the remaining flat iron rings。

③ Lock the safety screw onto the connector。

Step 3

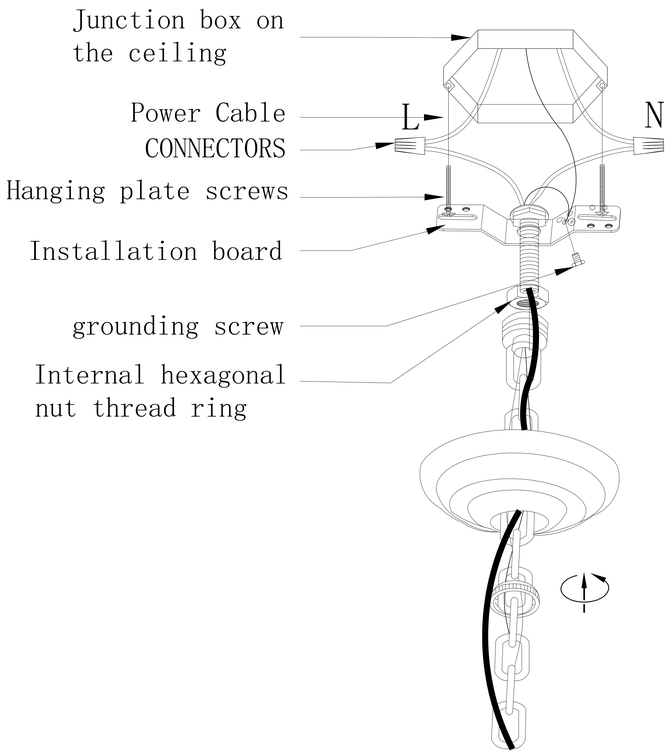

① Thread all the wires through the canopy and installation kit。

② Connect the power cable with two cable connectors。

③ Connect the grounding wire and tighten it with the grounding screw。

④ Install the fixing screws into the mounting plate, install the installation unit under the junction box, and tighten with two mounting screws。

⑤ Fix the canopy in place using a suspension ring. Tighten the screw ring and hex nut with a wrench to tighten the hex nut。

⑥ Tighten the fixing screws on the rain shelter holes。

⑦ Swivel the lid onto the canopy。

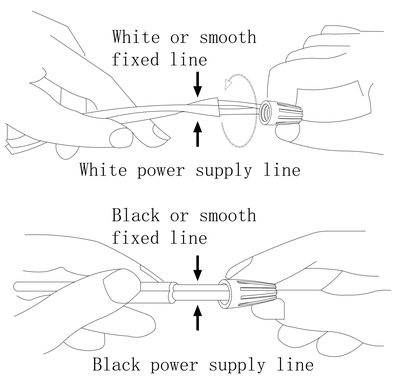

Connect the black or red wire (with an L sticker on the wire) to:	Connect the white wire (with N stickers on the wire) to:
black	white
Parallel lines - pti&l (circular and smooth)	Parallel lines - spri&l (square and ridge shaped)
Transparent, brown, gold or black (without tracer)	Transparent, brown, gold or black (with tracer)
Copper core insulated wire (excluding GREEN)	Silver conductor insulated wire (excluding GREEN)

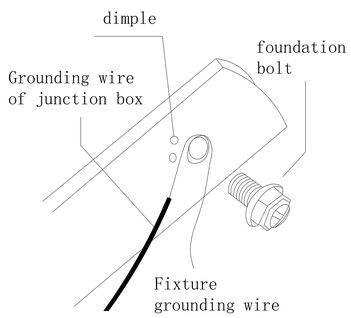

Step 4

Kind reminder:Before installing the crystal, please clean it thoroughly 。

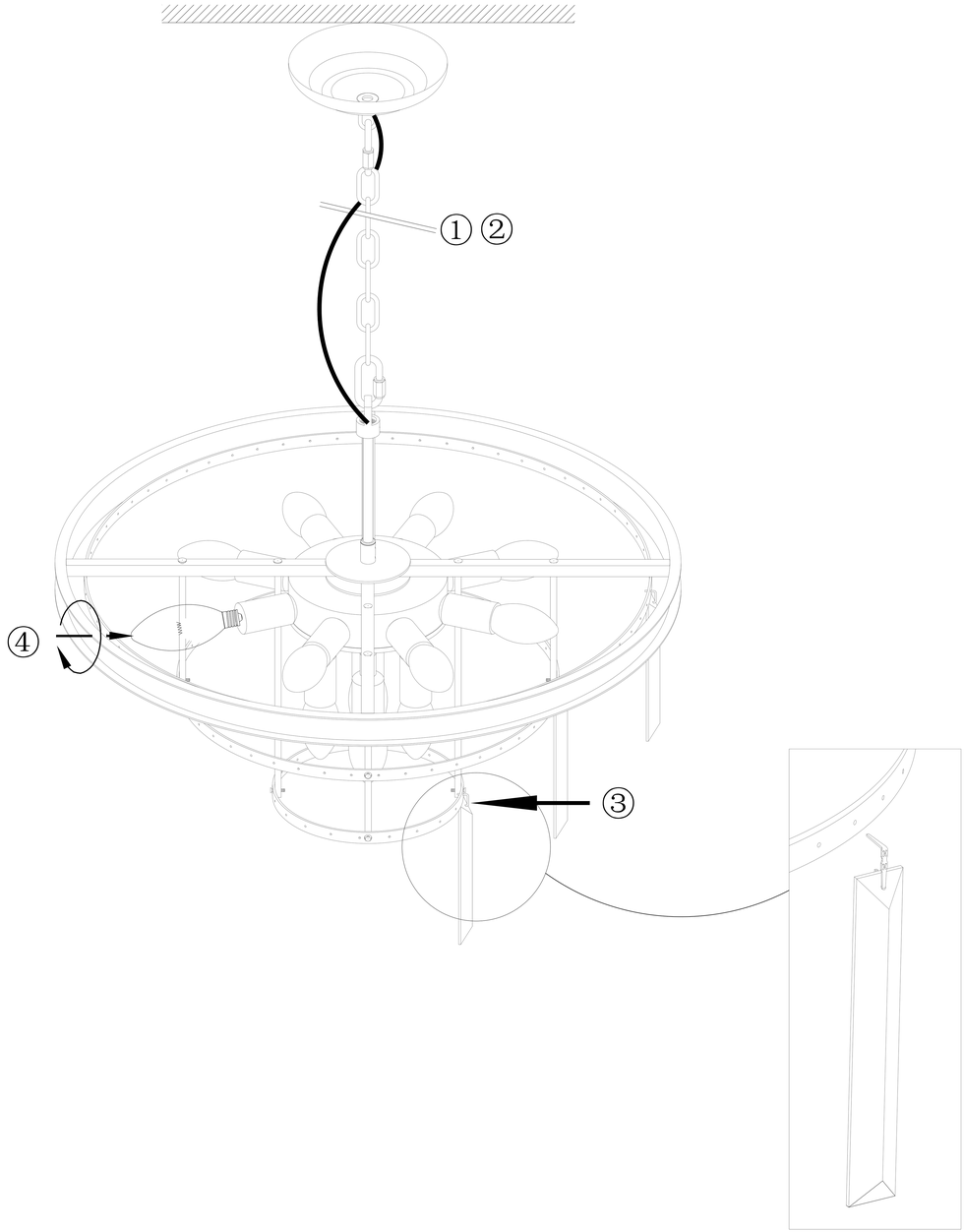

①② This depends on the height of your ceiling and the desired suspension length. You can measure the chain and adjust the locking buckle to achieve the desired chain length。

③ Thread the hanging needle through the long crystal hole to hang it with the circular hole。

④ Tighten the light bulb (E12 maximum 40W, not included)。