24" Bathroom Vanity

24 in. W x 22 in.D x 34 in.H
(61 cm x 55.9 cm x86.3 cm)

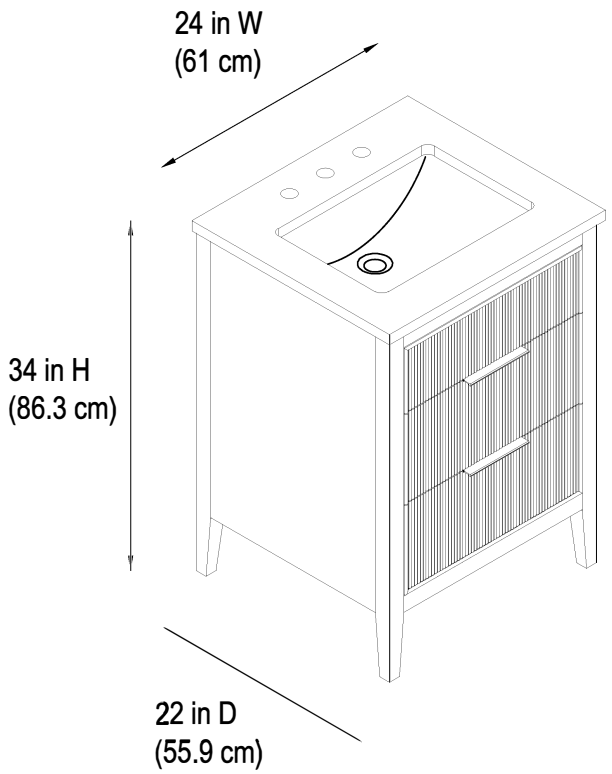

Top View

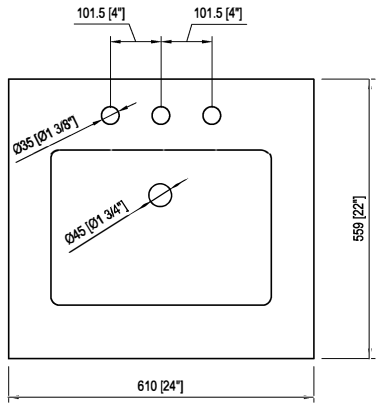
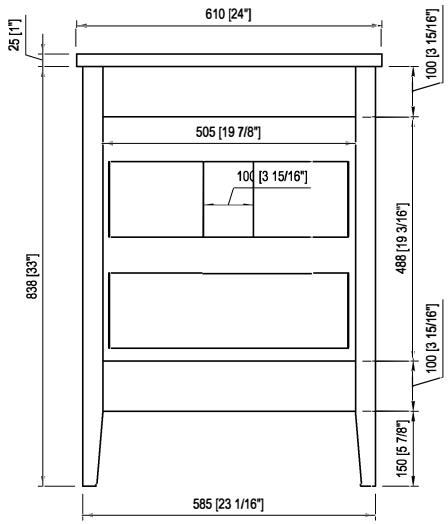
Back View