ASSEMBLY INSTRUCTIONS

TWIN HOUSE HB BED WITH FENCE, DRAWERS

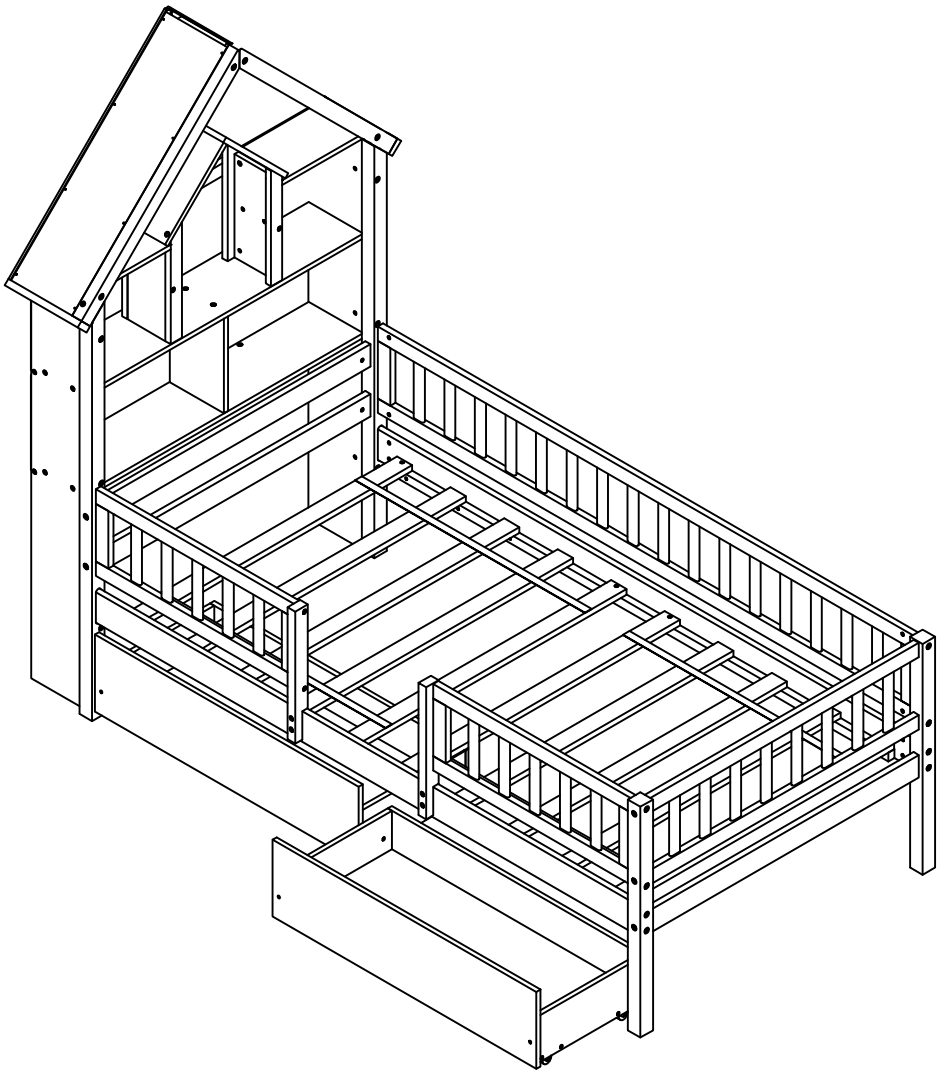

DN33761

Detail View

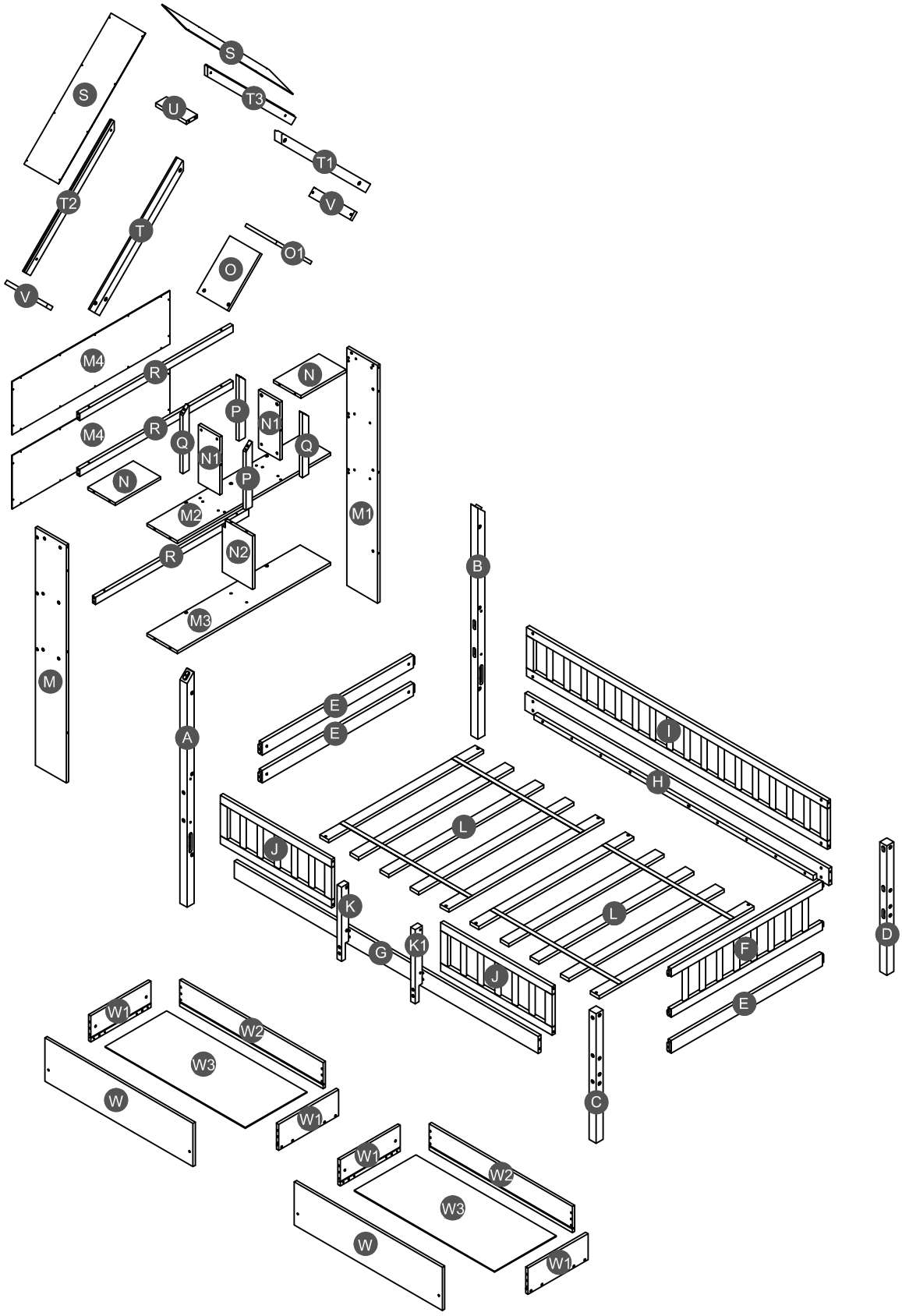
S
S
T3
U
T1
V
T2
T
O1
O
V
M4
R
N
P
N1
M4
R
Q
Q
N1
N
P
M2
M1
R
N2
M3
M
B
A
E
E
I
H
L
J
K
L
D
G
K1
F
J
E
W1
W2
W3
W
W1
C
W1
W2
W3
W
W1

Part List

Hardware List DN33761 (1-2)

A 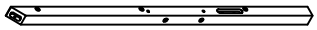 Leg HB (Left Front) - 1pc	**B** 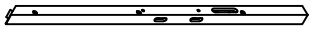 Leg HB (Left Back) - 1pc	**C** 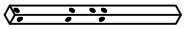 Leg FB (Right Front) - 1pc
D 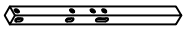 Leg FB (Right Back) - 1pc	**E** 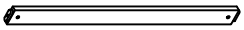 Horizontal bar HB & FB - 3pcs	**F** 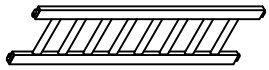 Frame FB - 1pc
G 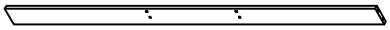 Side rail (Front) - 1pc	**H** 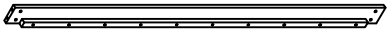 Side rail (Back) - 1pc	**I** 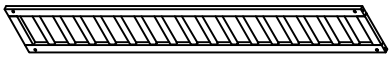 Long guard rail (Back) - 1pc
J 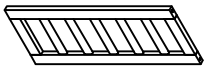 Short guard rail (Front) - 2pcs	**K** 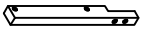 Guard rail support (Left) - 1pc	**K1** 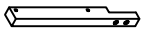 Guard rail support (Right) - 1pc
L 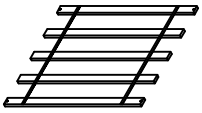 Slats - 2sets (5pcs/set)	**S** 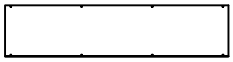 Top panel - 2pcs	**T**  Horizontal bar (Left Front) - 1pc
T1 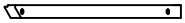 Horizontal bar (Right Front) - 1pc		

Part List

DN33761 (2-2)

M 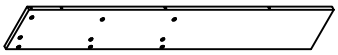 Side panel (Left) - 1pc	**M1**  Side panel (Right) - 1pc	**M2** 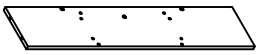 Upper shelf - 1pc
M3 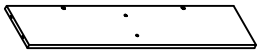 Lower shelf - 1pc	**M4** 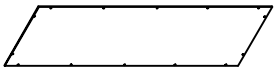 Back panel - 2pcs	**N**  Shelf panel - 2pcs
N1  Upper divider panel - 2pcs	**N2** 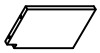 Lower divider panel - 1pc	**O**  Upper panel (Left) - 1pc
O1 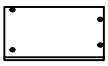 Upper panel (Right) - 1pc	**P** 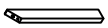 Vertical bar (Left Front/Right Back) - 2pcs	**Q** 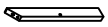 Vertical bar (Left Back/Right Front) - 2pcs
R 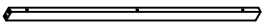 Horizontal bar (Back) - 3pcs	**T2** Horizontal bar (Left Back) - 1pc	**T3** 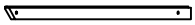 Horizontal bar (Right Back) - 1pc
U  Upper horizontal bar - 1pc	**V**  Support - 2pcs	**W** 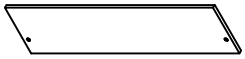 Front drawer panel - 2pcs
W1  Left / right drawer panel - 4pcs	**W2**  Back drawer panel - 2pcs	**W3** 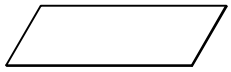 Drawer bottom - 2pcs

Hardware List DN33761 (1-2)

1 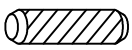 Ø8*30mm	**2** 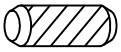 Ø10*20mm	**3** 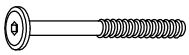 (Ø15)1/4"*100mm
Wood dowel (26pcs)	Wood dowel (8pcs)	Hex-Head bolts (16pcs)
4 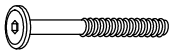 (Ø15)1/4"*80mm	**5** 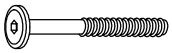 (Ø12)1/4"*60mm	**6**  (Ø12)1/4"*35mm
Hex-Head bolts (24pcs)	Hex-Head bolts (48pcs)	Hex-Head bolts (4pcs)
7  1/4"*15 (9.5mm)	**8** 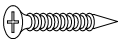 Ø4*30mm	**9**  (1/4")4.5*58mm
Horizontal-Hole bolts(88pcs)	Wood screws (30pcs)	Allen key (1pc)
10 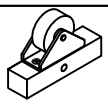 100*54*20 mm	**11**  Ø3.5*15mm	**12**  70*35*19 mm
Wheels (8pcs)	Wood screws (44pcs)	Drawer stopper (3pcs)
13  (Ø12)1/4"*65mm	**14**  (Ø12)1/4"*40mm	
Hex-Head bolts (2pcs)	Hex-Head bolts (16pcs)	

ASSEMBLY TOOLS REQUIRED (NOT INCLUDED)

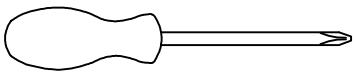



PLEASE BE CAREFUL DO NOT DAMAGE THE HOLE POSITION WHEN YOU USE POWER TOOLS !

STEP 1:

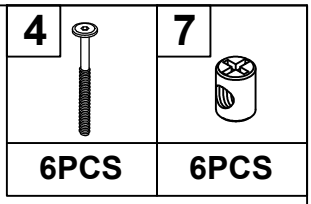

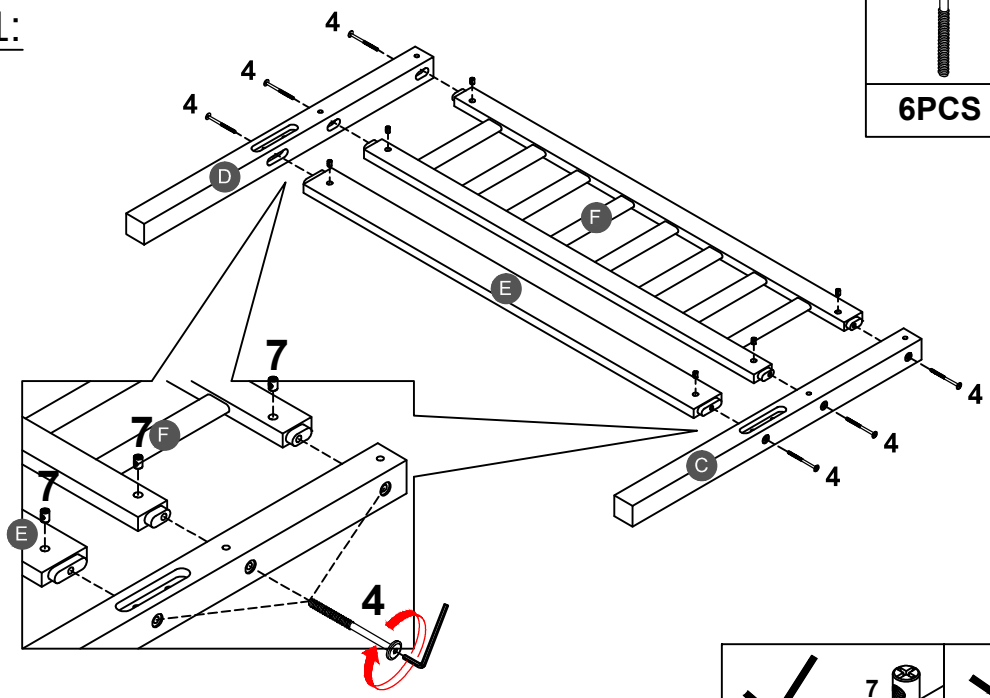

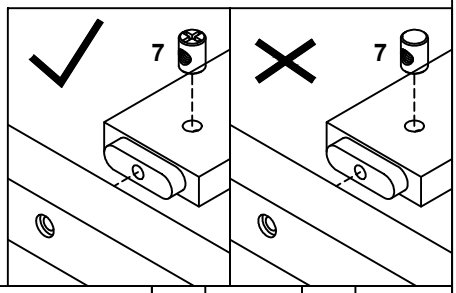

Note:Part 7 will face up with the "x" mark on it, otherwise it cannot be tightened

STEP 2:

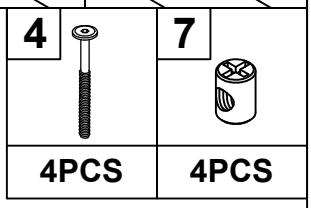

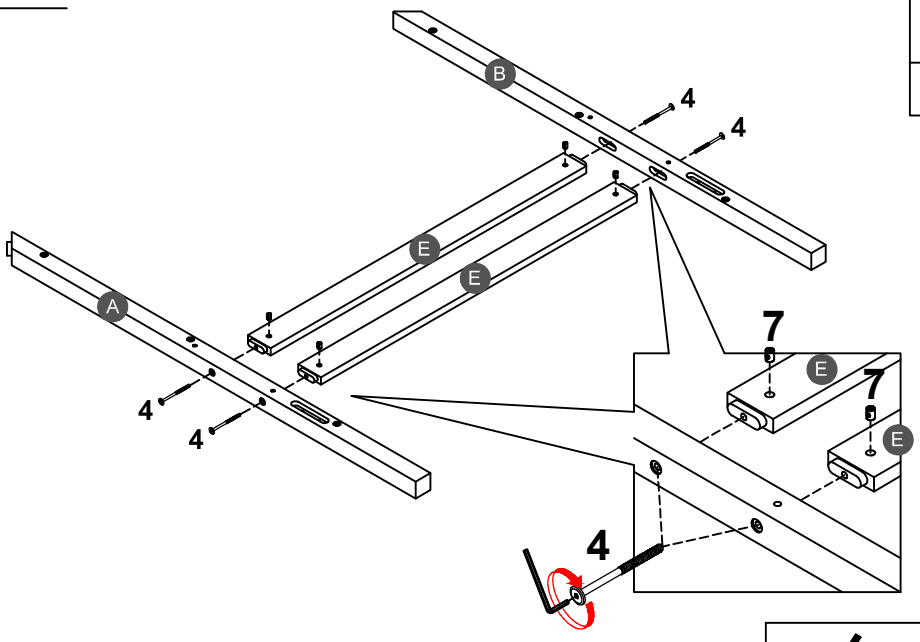

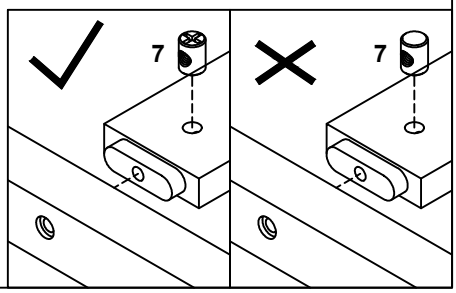

Note:Part 7 will face up with the "x" mark on it, otherwise it cannot be tightened

STEP 3:

8	12
6PCS	3PCS

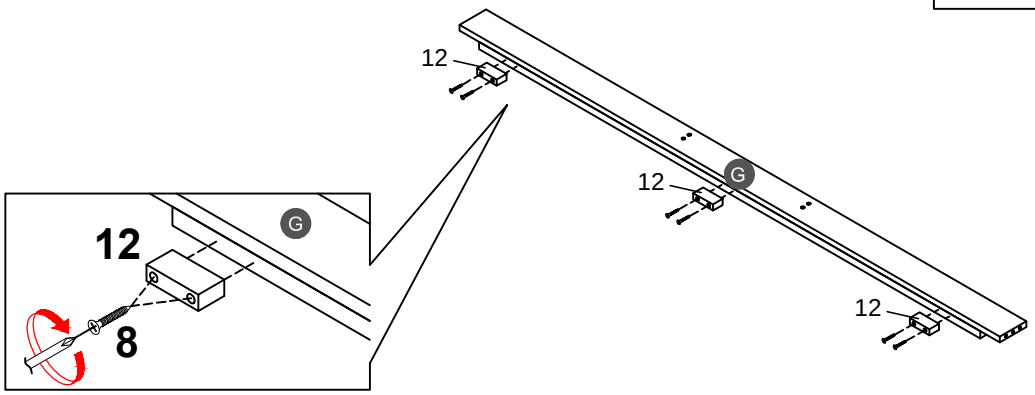

Drawer stopper (12) with lower side rail front (G) by using screw (8).

STEP 4:

3
12PCS
7
12PCS

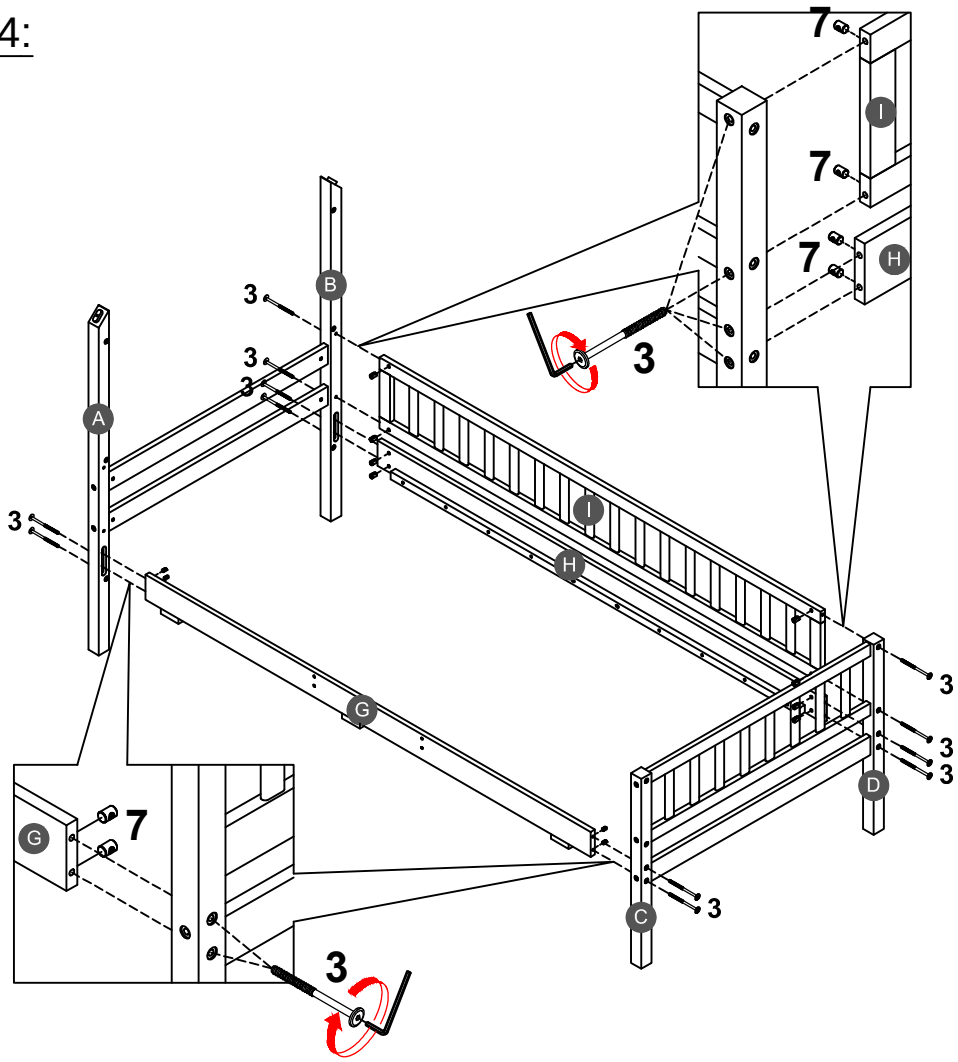

STEP 5:

3	4	6
4PCS	4PCS	4PCS

7
8PCS

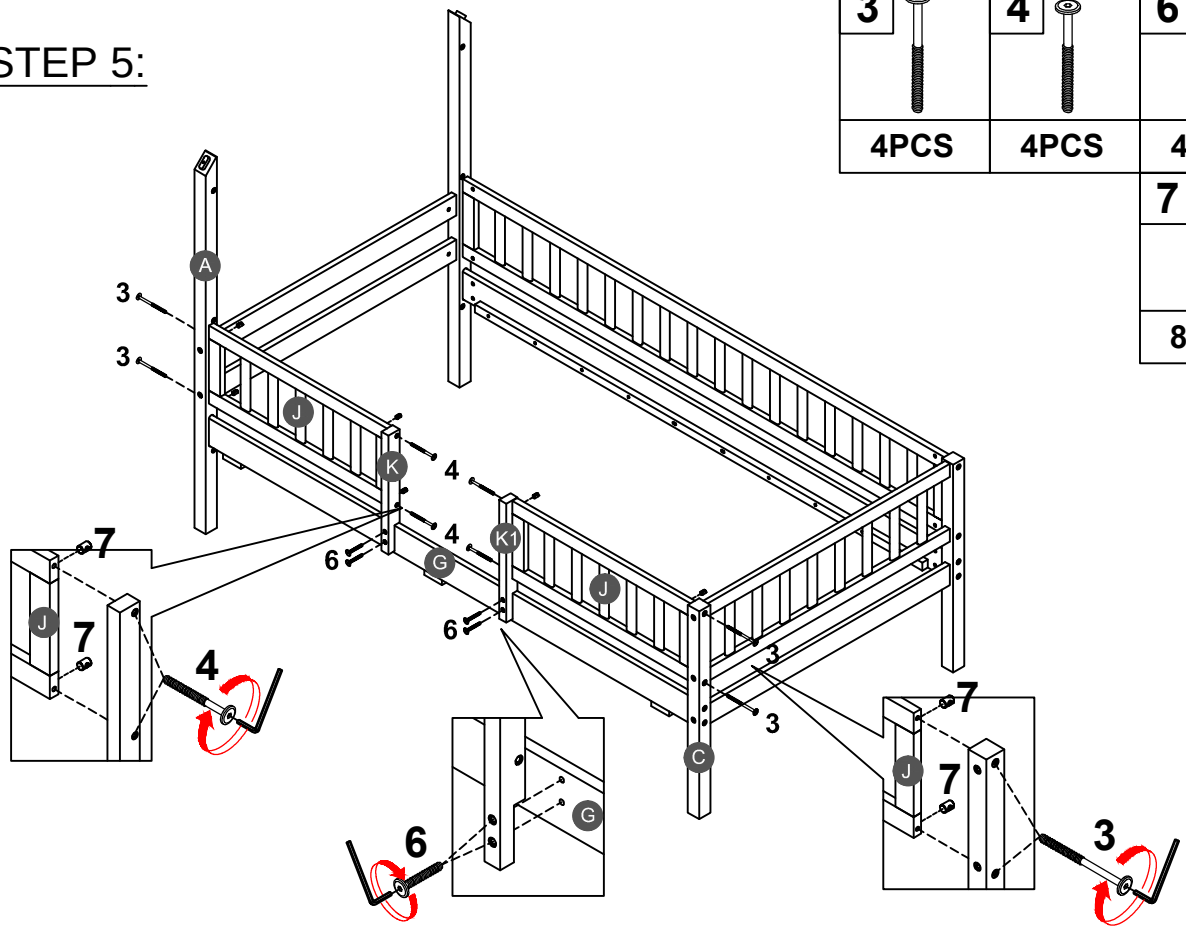

STEP 6:

5	7
8PCS	8PCS

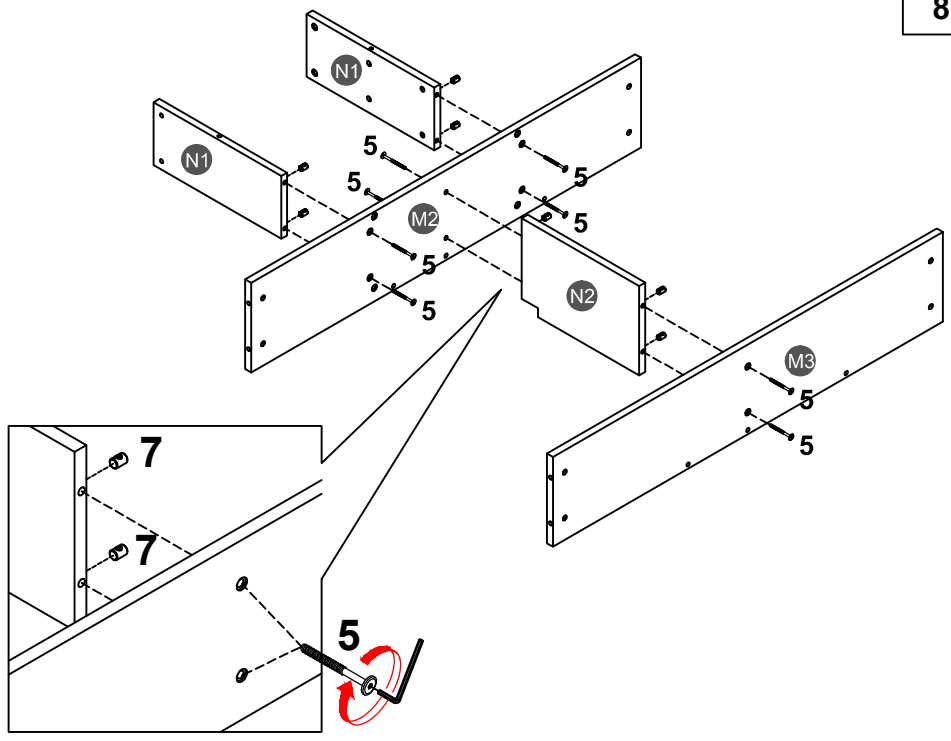

STEP 7:

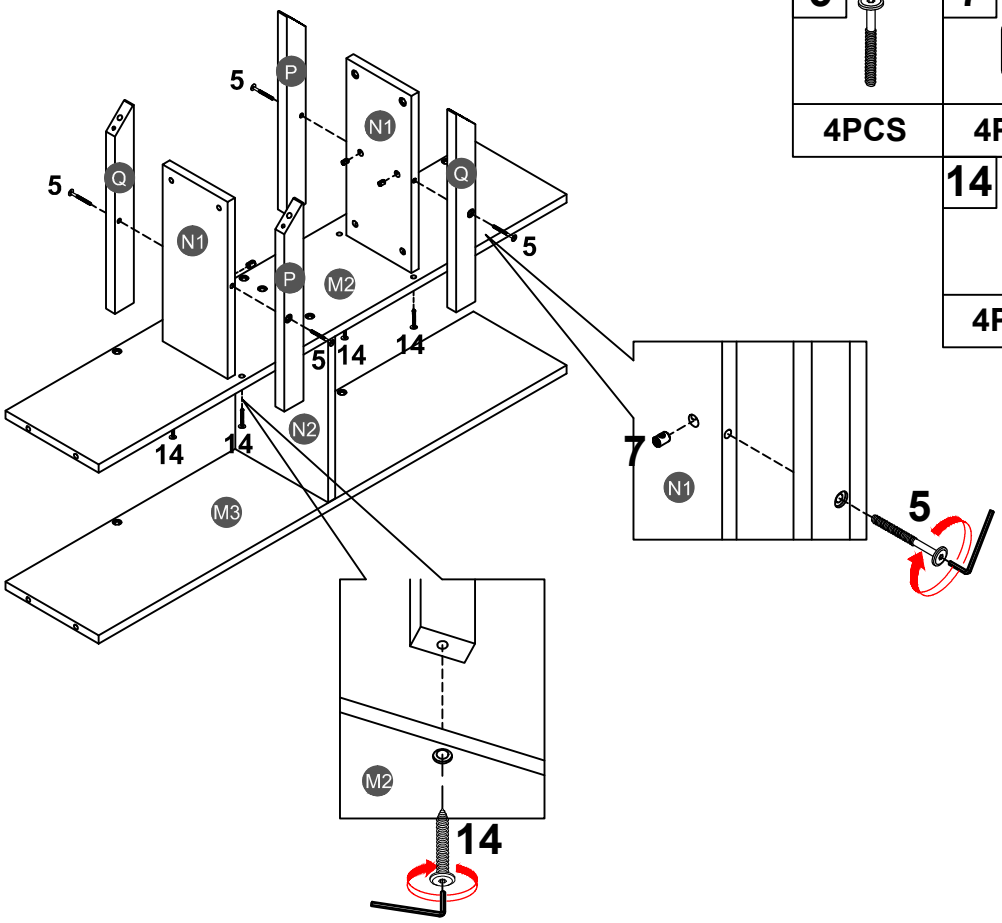

5	7
4PCS	4PCS

14
4PCS

STEP 8:

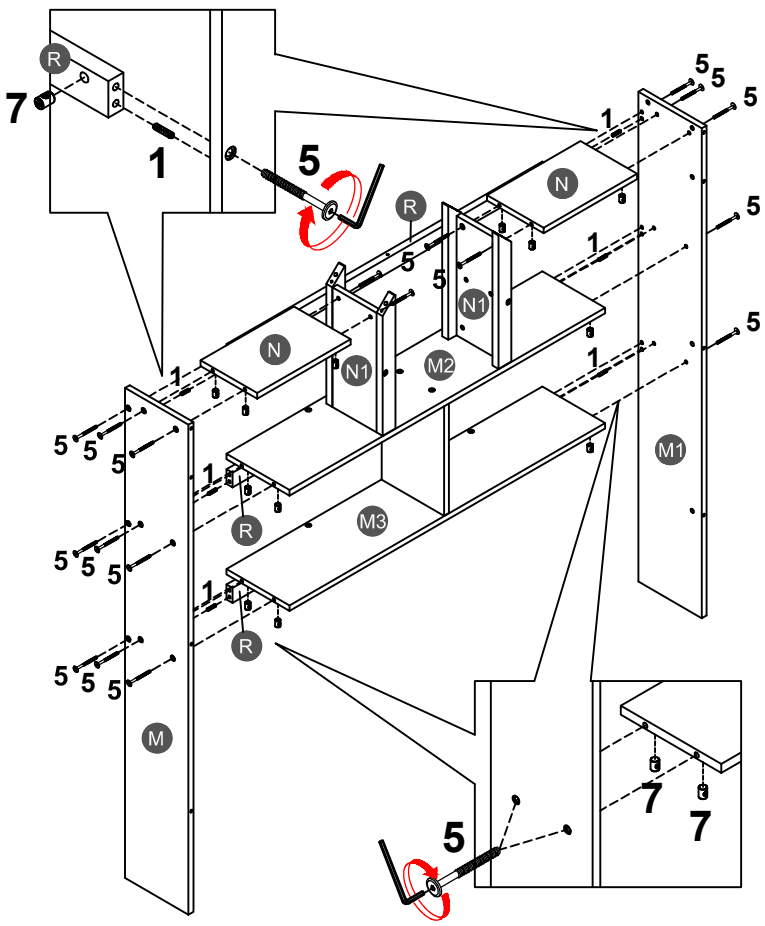

1	5
6PCS	22PCS

7
22PCS

STEP 9:

14
4PCS

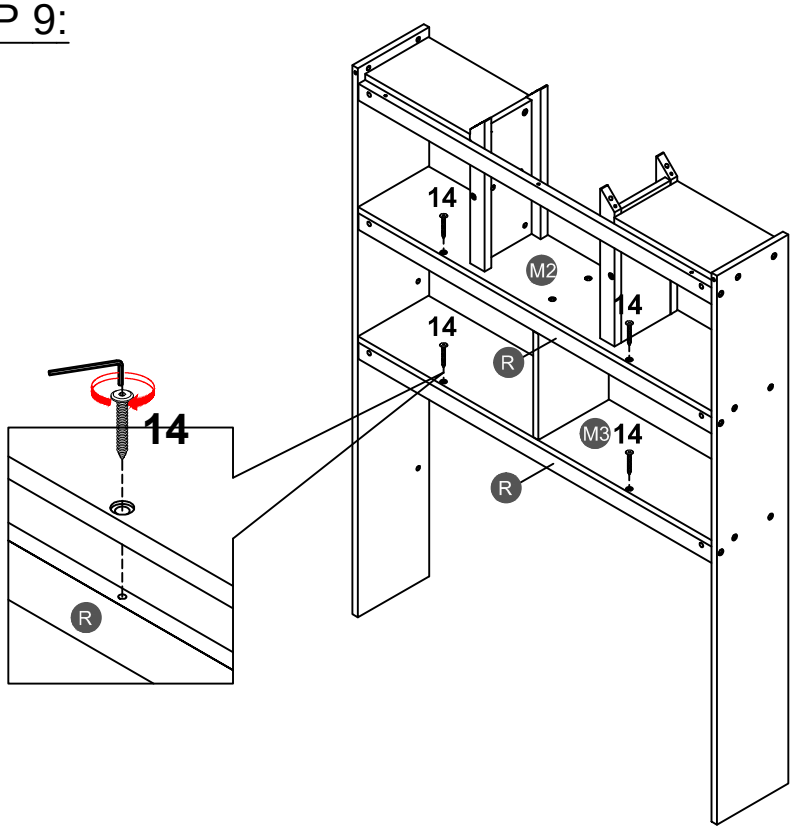

STEP 10:

1	14
2PCS	2PCS

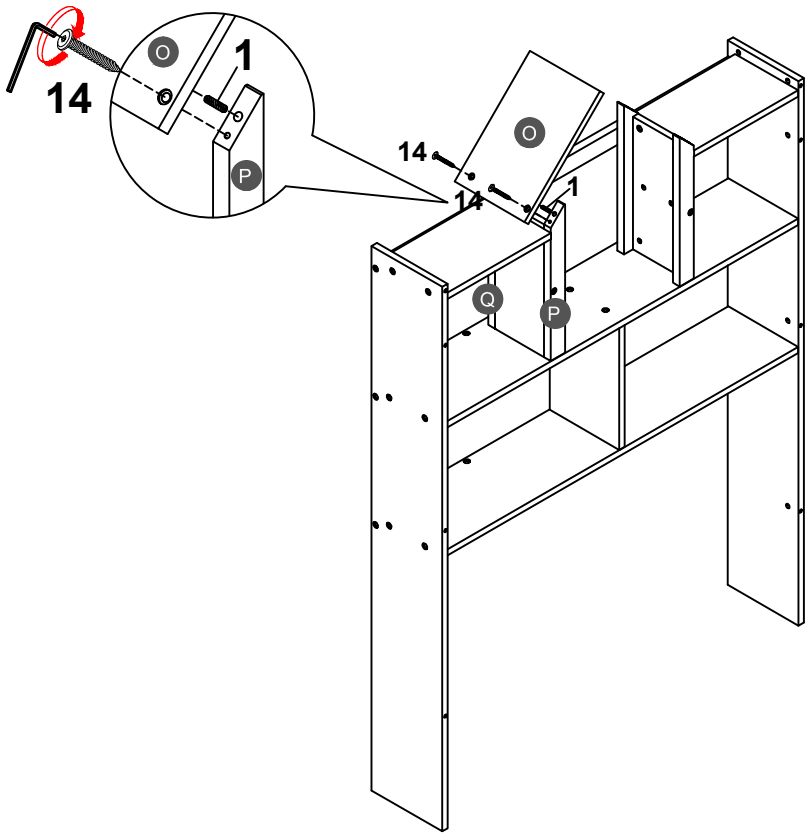

STEP 11:

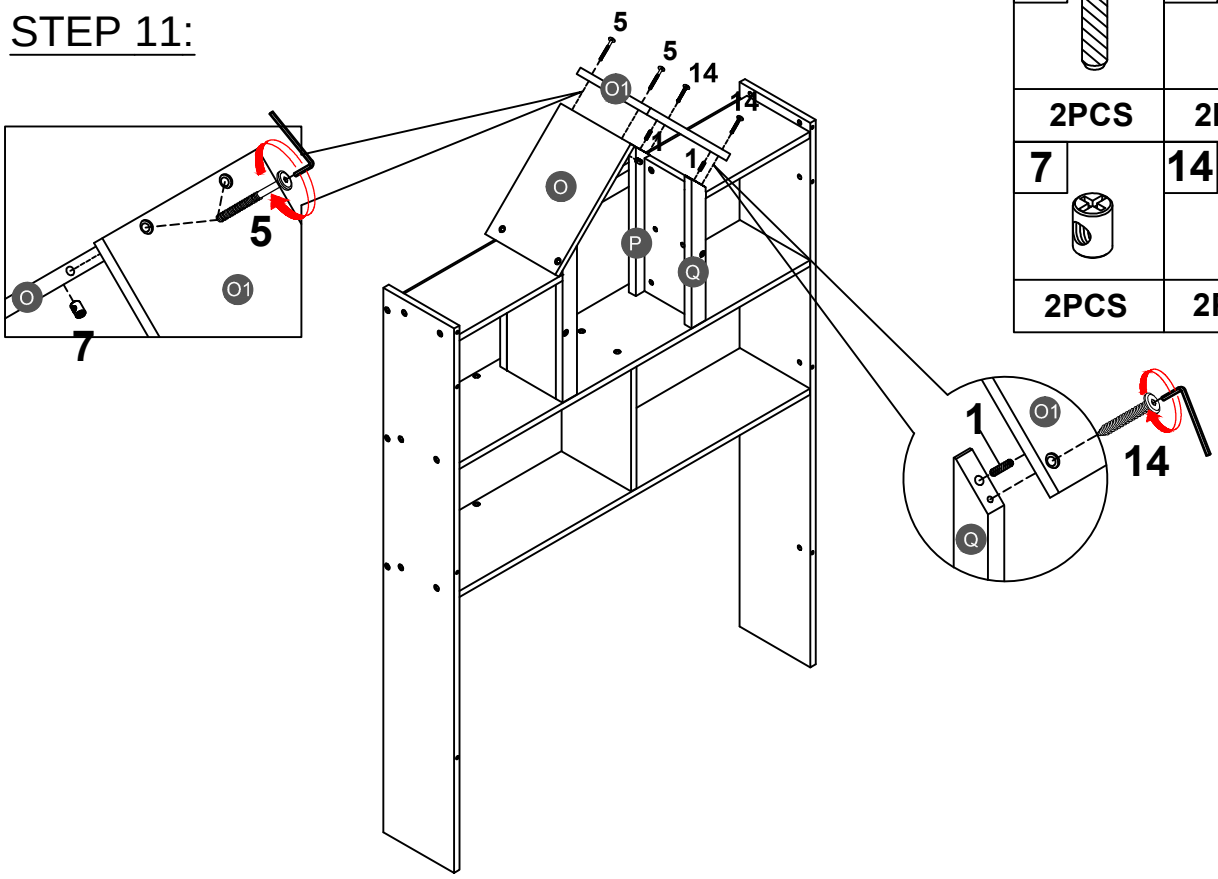

1	5
2PCS	2PCS
7	14
2PCS	2PCS

STEP 12:

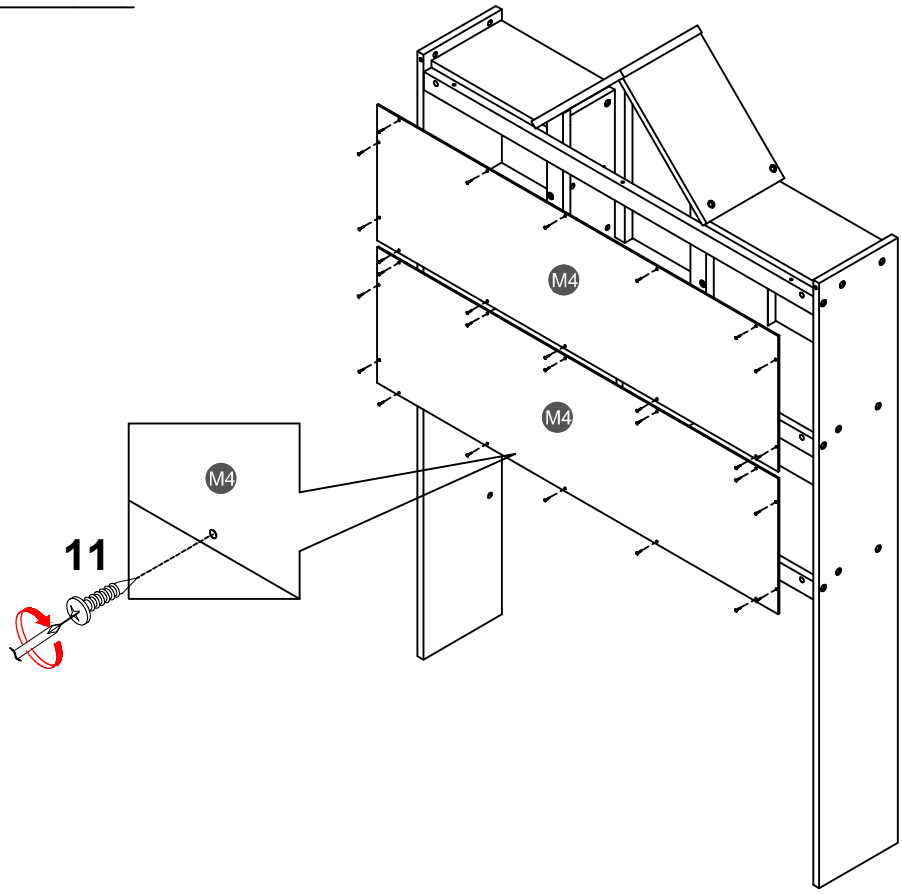

11
28PCS

STEP 13:

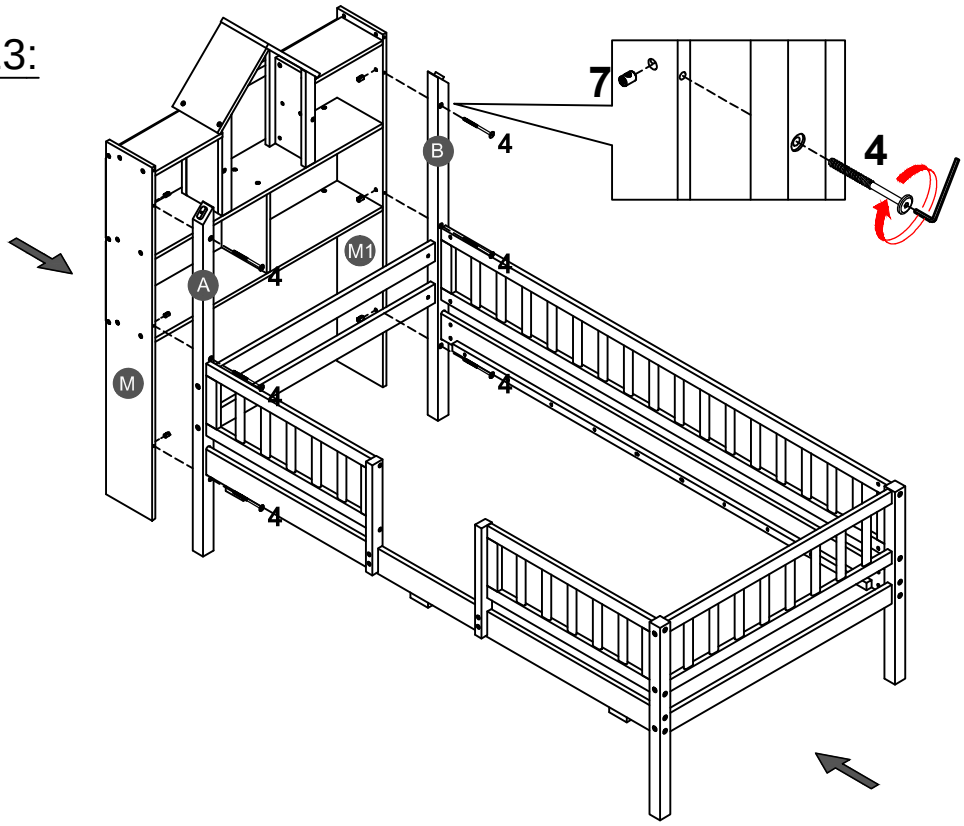

4	7
6PCS	6PCS

STEP 14:

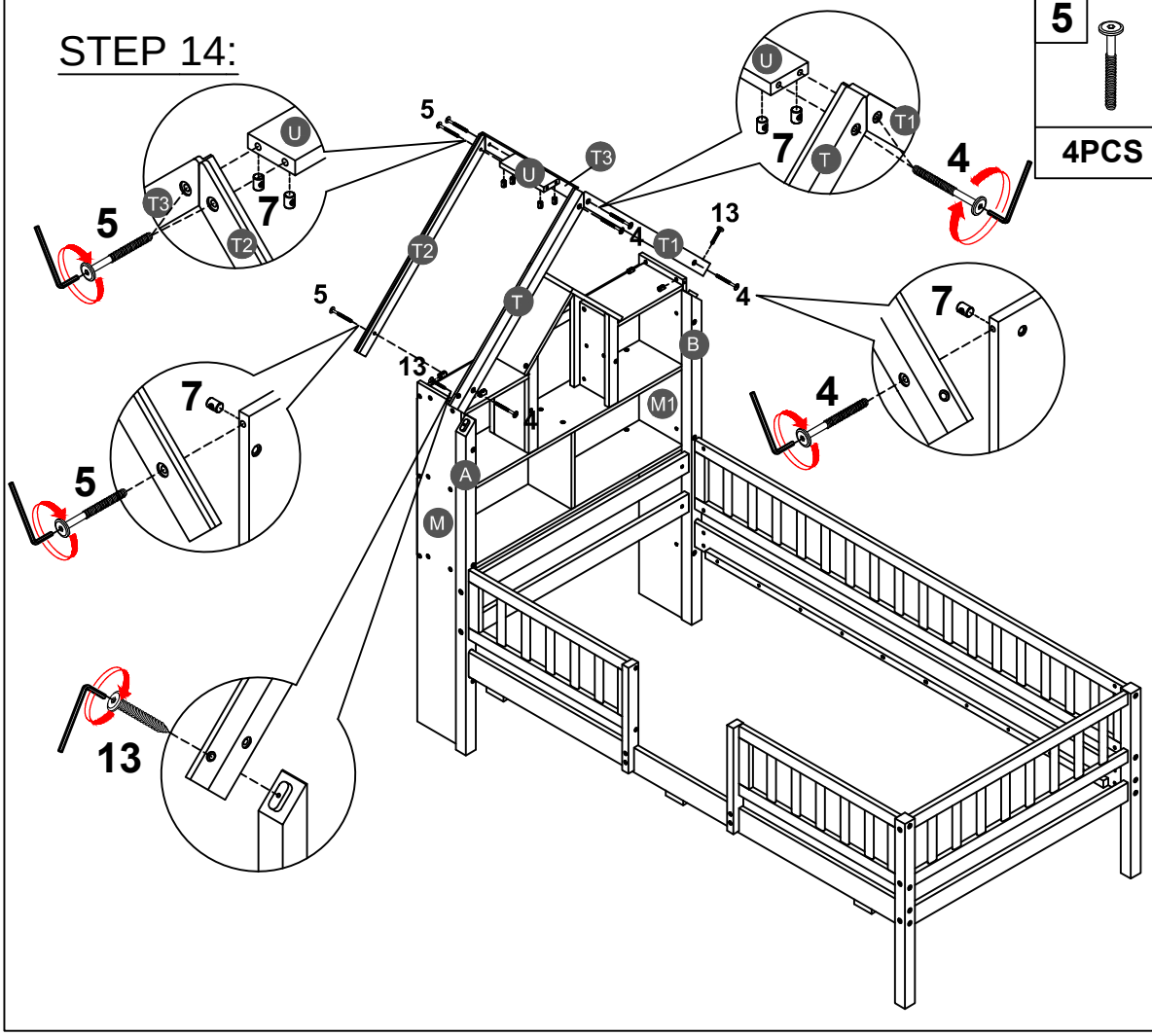

5	4	7	13
4PCS	4PCS	8PCS	2PCS

STEP 15:

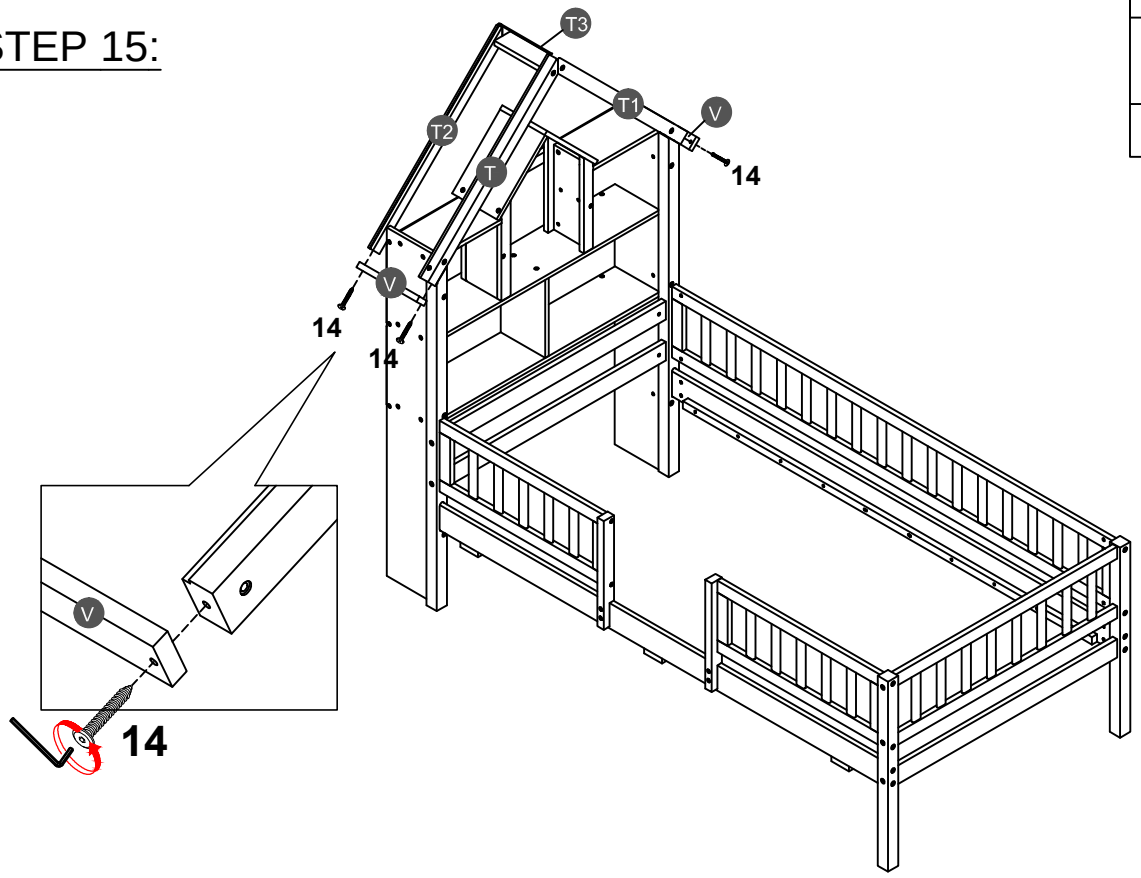

14

4PCS

STEP 16:

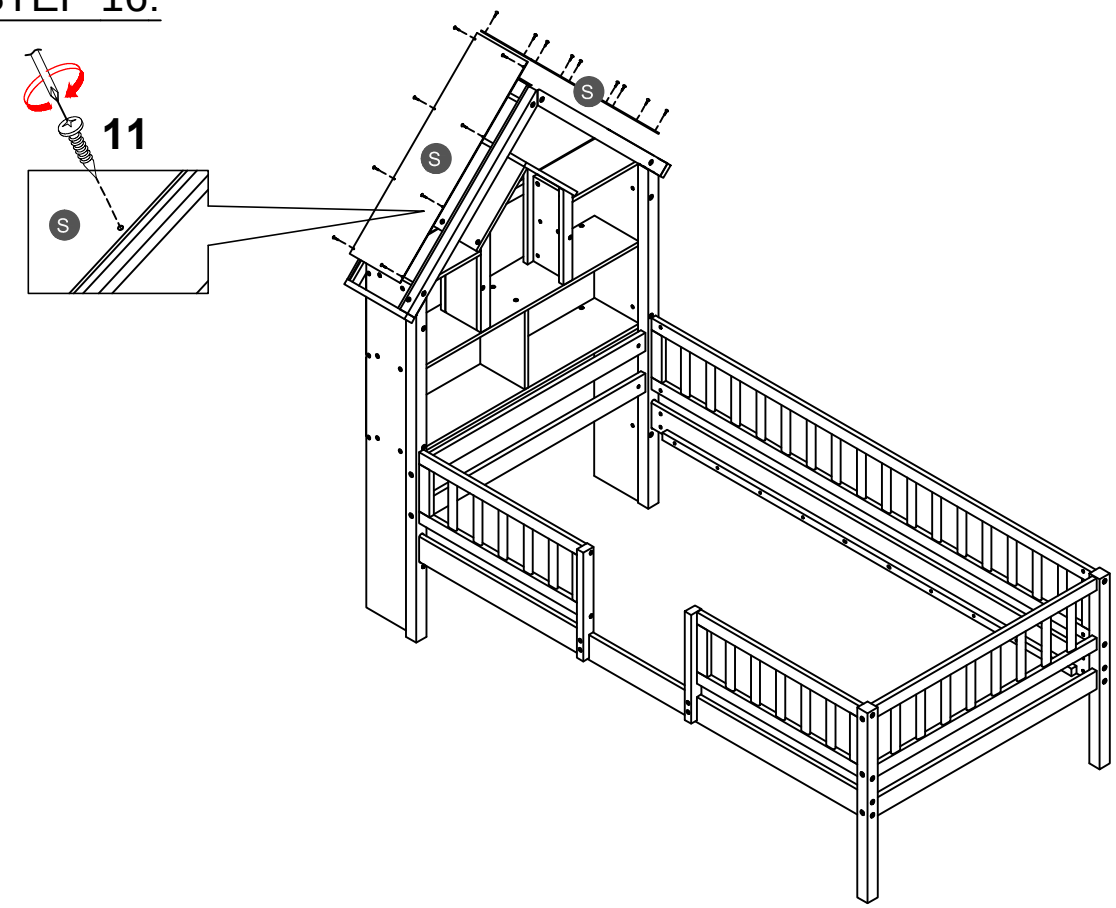

11

16PCS

STEP 17:

8	
	8PCS

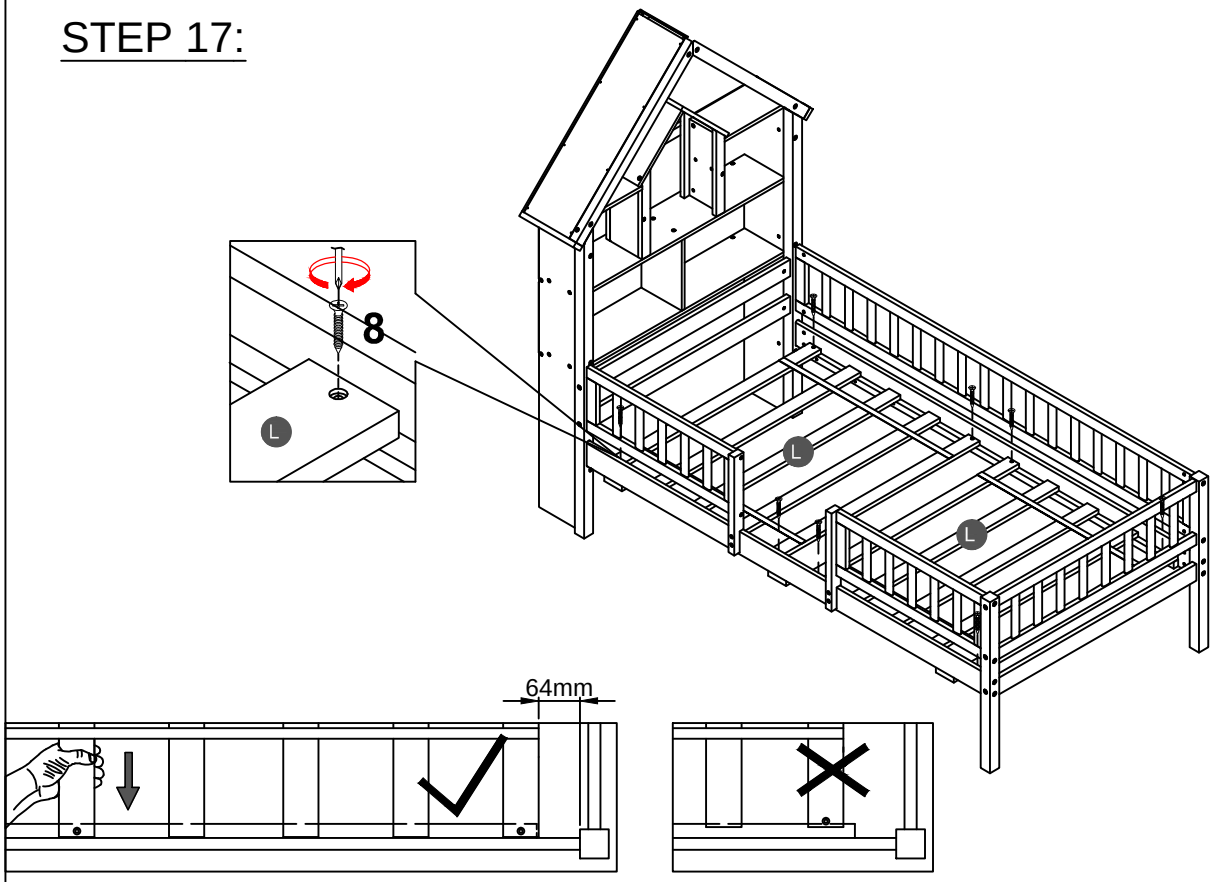

Note: Do not lock the screws of the bed slats to the outermost edge of the bed slats, you need to leave a certain space at the edges, otherwise it will cause the board to break.
Do not lock the bed slats on the edge of the wood, please hold firmly before screwing , hold it in place with one hand, then lock the screw.

STEP 18:

1	5	7
8PCS	4PCS	4PCS

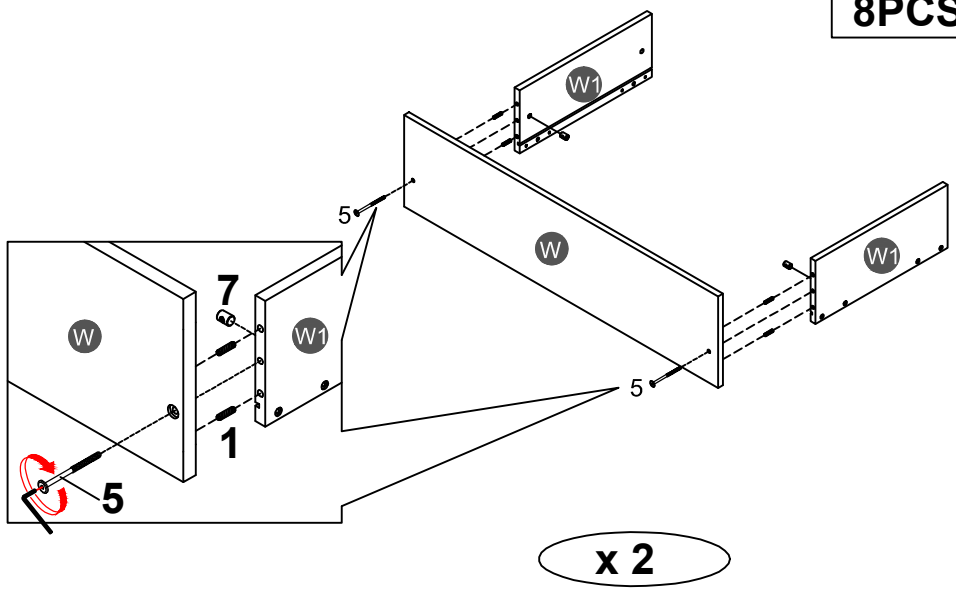

STEP 19:

1	5	7
8PCS	4PCS	4PCS

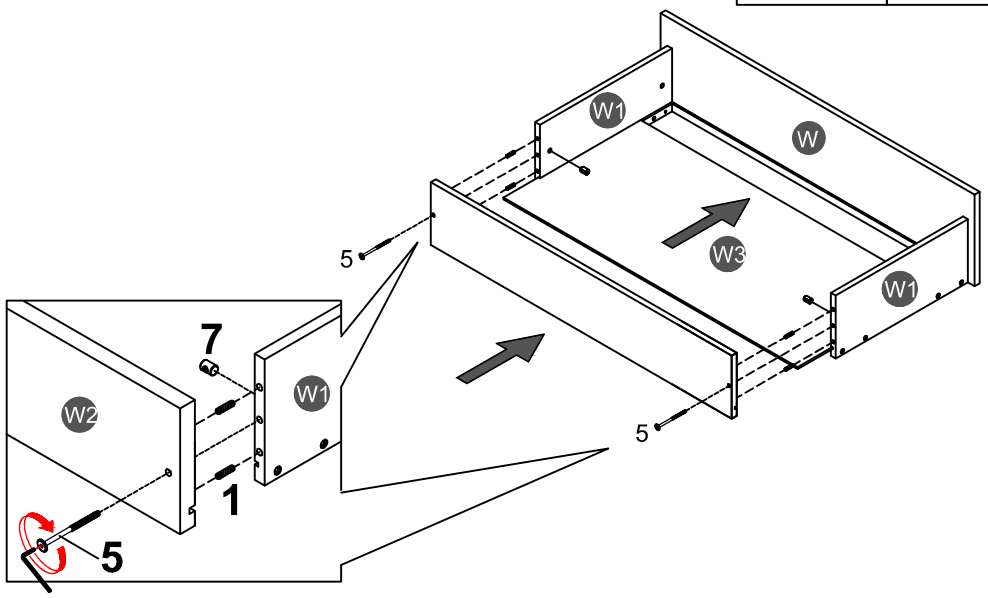

x 2

STEP 20:

2	8	10
8PCS	16PCS	8PCS

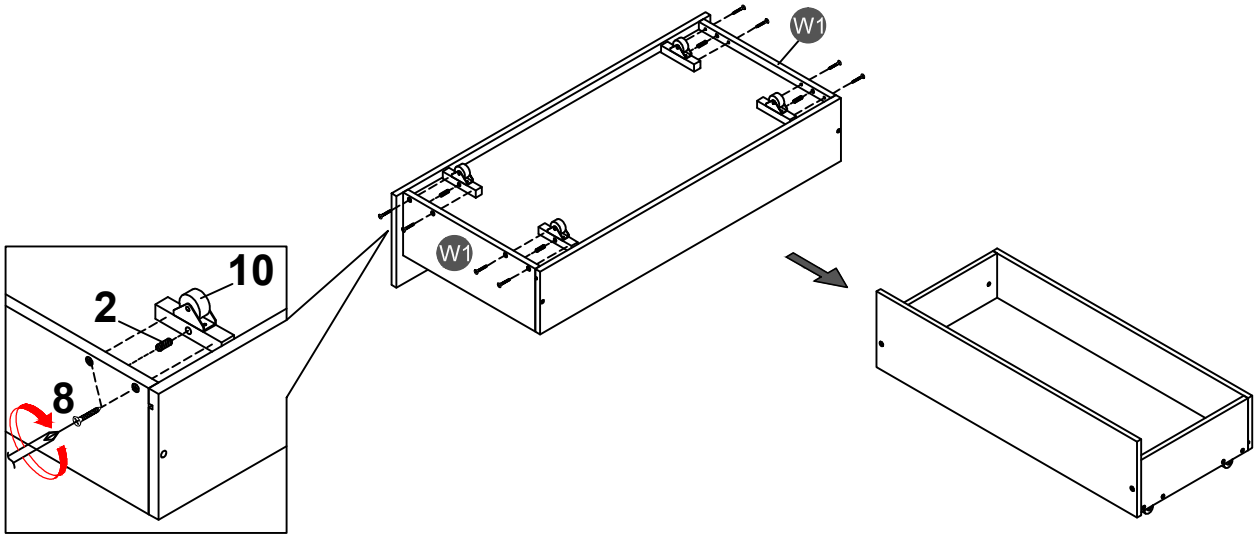

x 2

STEP 21:

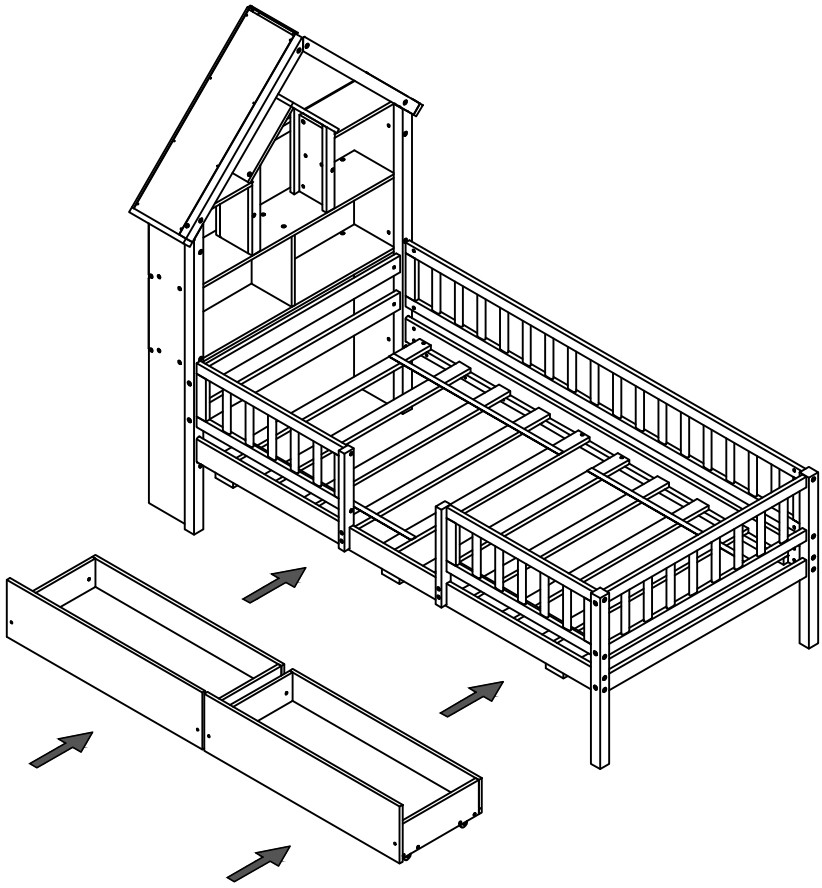

Push Drawer under the bottom of Bunk Bed.

