ASSEMBLY INSTRUCTIONS

TWIN PLATFORM BED, HOUSE SHAPE HB

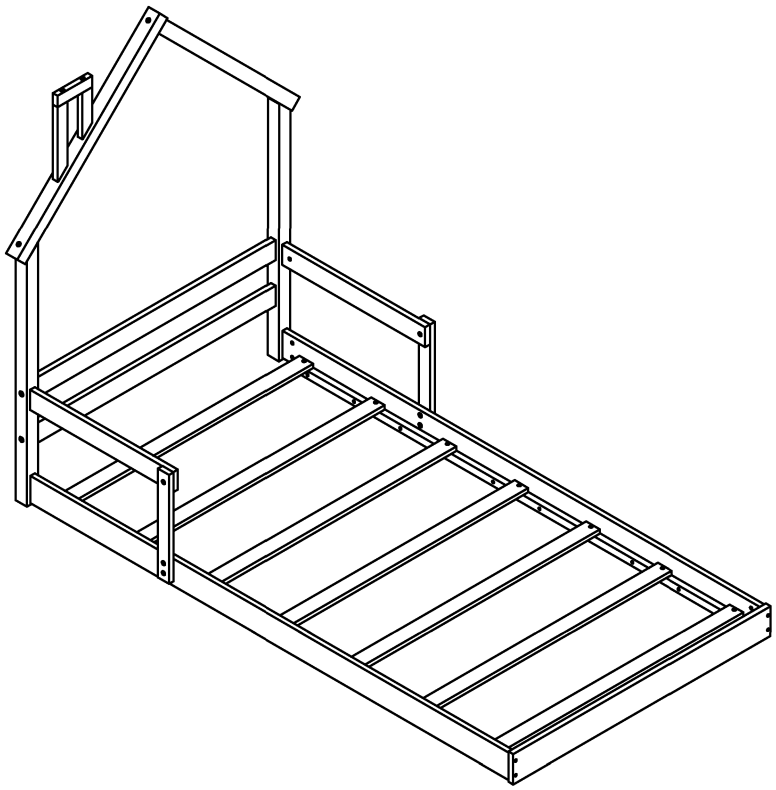

Detail View

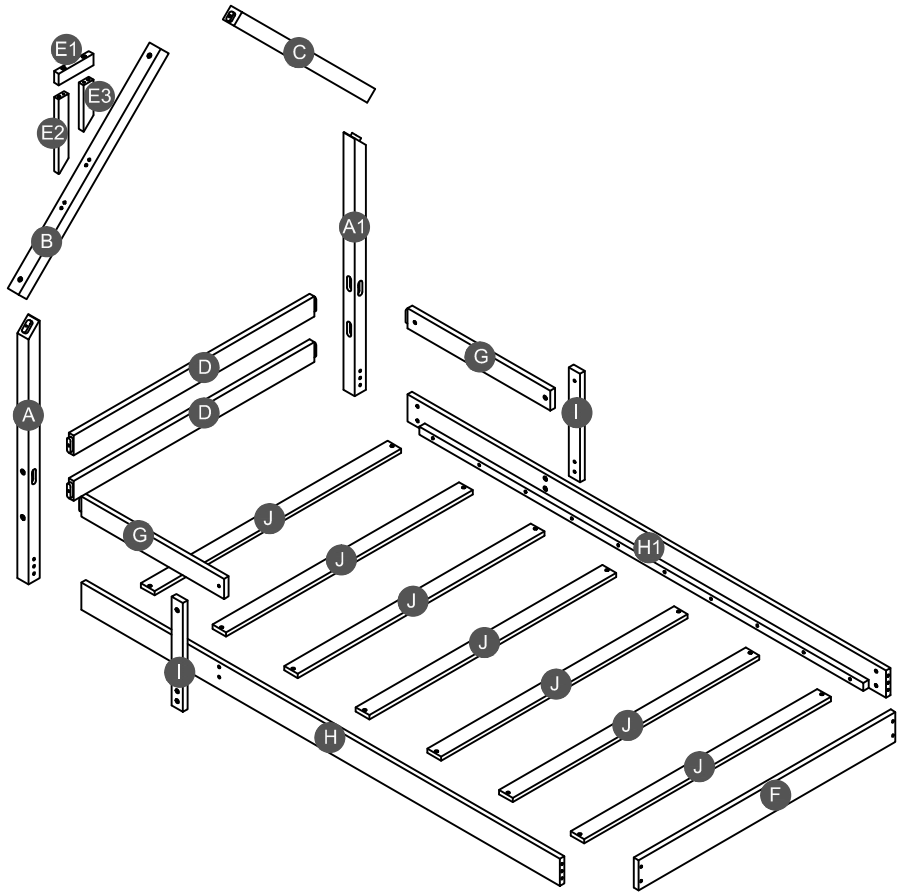

Part List

A 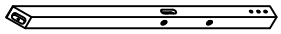 Leg (Left Front) - 1pc	**A1** 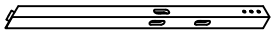 Leg (Left Back) - 1pc	**B**  Upper (Left Front) - 1pc
C 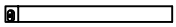 Upper (Left Back) - 1pc	**D** 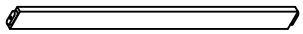 Lower horizontal bar - 2pcs	**E1**  Upper horizontal bar - 1pc
E2  Upper Vertical bar (Front) - 1pc	**E3**  Upper Vertical bar (Back) - 1pc	**F** 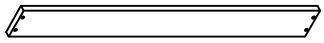 Horizontal bar FB - 1pc
G 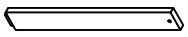 Short guard rail - 2pcs	**H** 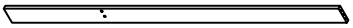 Side rail (Front) - 1pc	**H1**  Side rail (Back) - 1pc
I 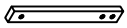 Vertical guard rail - 2pcs	**J** 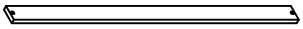 Slat - 7pcs	

Hardware List

1 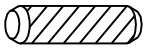 Ø8*30mm	**2** 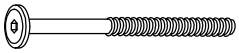 (Ø15)1/4"*100mm	**3** 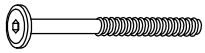 (Ø15)1/4"*80mm
Wood dowel (8pcs)	Hex-Head bolts (4pcs)	Hex-Head bolts (10pcs)
4  (Ø12)1/4"*35mm	**5**  1/4"*15 (9.5mm)	**6**  (Ø12)1/4"*65mm
Hex-Head bolts (6pcs)	Horizontal-Hole bolts(14pcs)	Hex-Head bolts (7pcs)
7 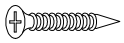 Ø4*30mm	**8**  (1/4")4.5*58mm	
Wood screws (14pcs)	Allen key (1pc)	

ASSEMBLY TOOLS REQUIRED (NOT INCLUDED)

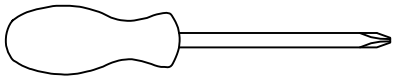



PLEASE BE CAREFUL DO NOT DAMAGE THE HOLE POSITION WHEN YOU USE POWER TOOLS !

STEP 1:

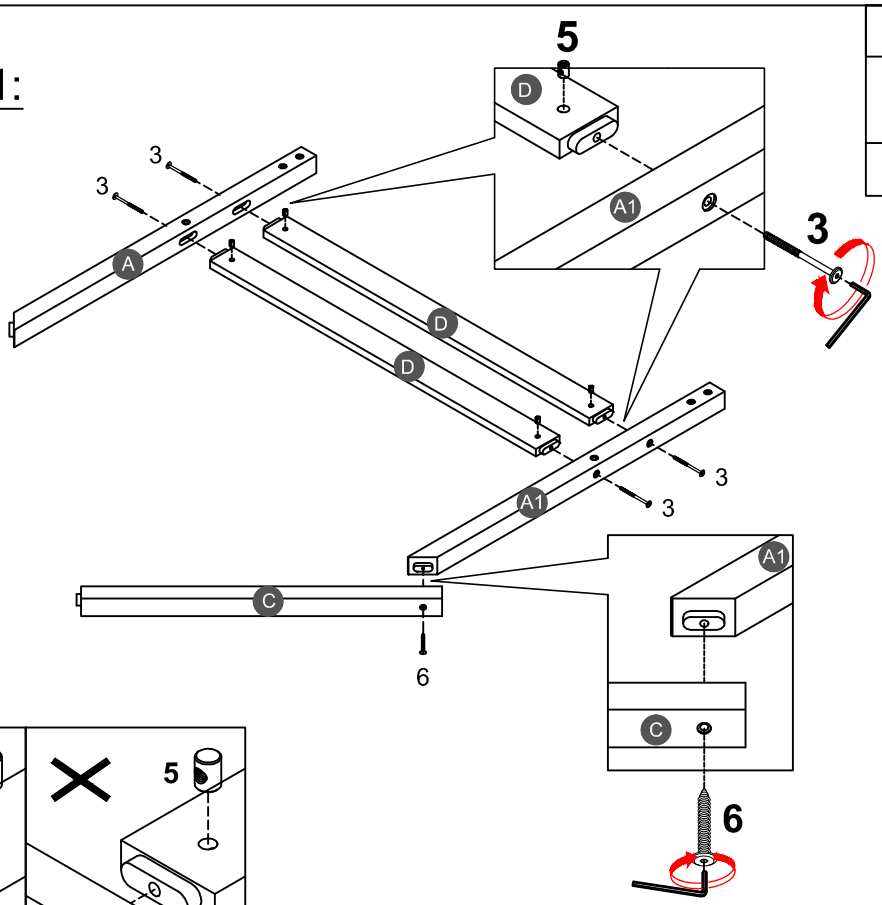

3	5	6
4PCS	4PCS	1PC

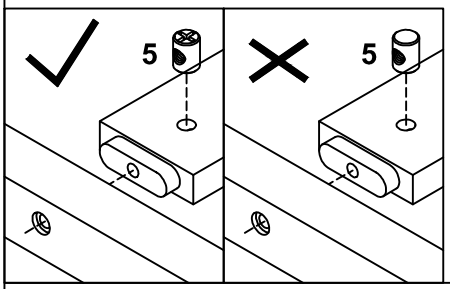

Note:Part 5 will face up with the "x" mark on it, otherwise it cannot be tightened

STEP 2:

6
2PCS

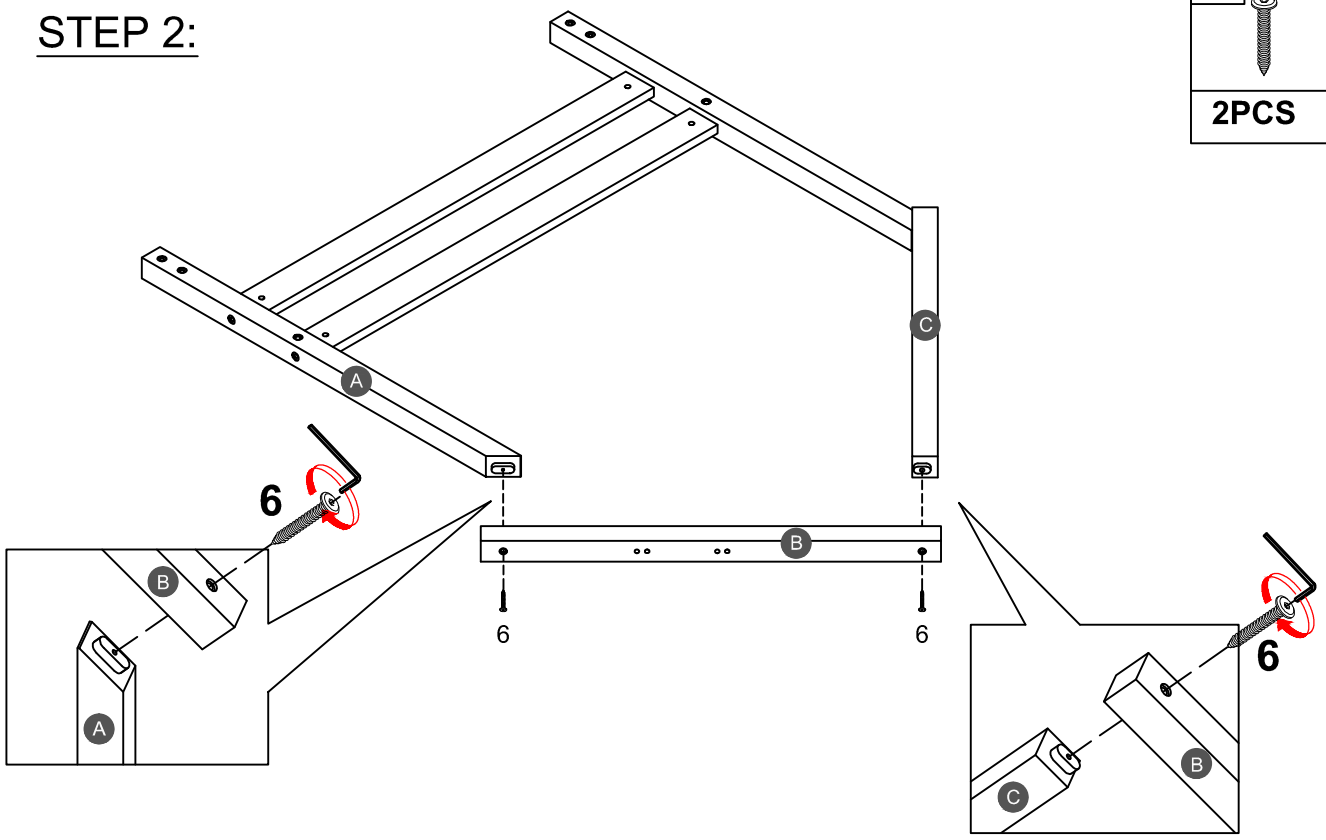

STEP 3:

1	6
2PCS	2PCS

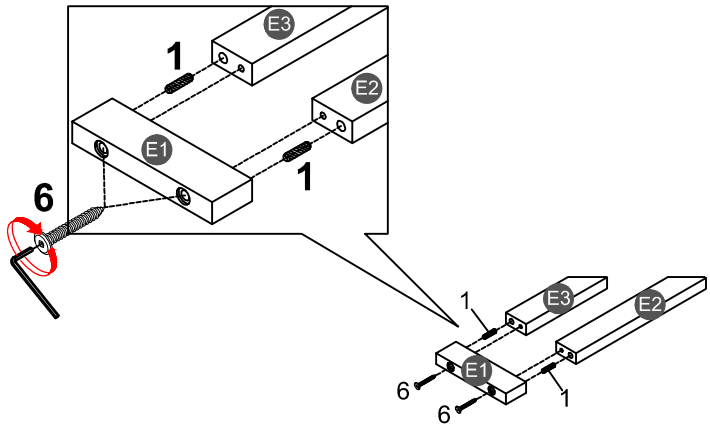

STEP 4:

1	6
2PCS	2PCS

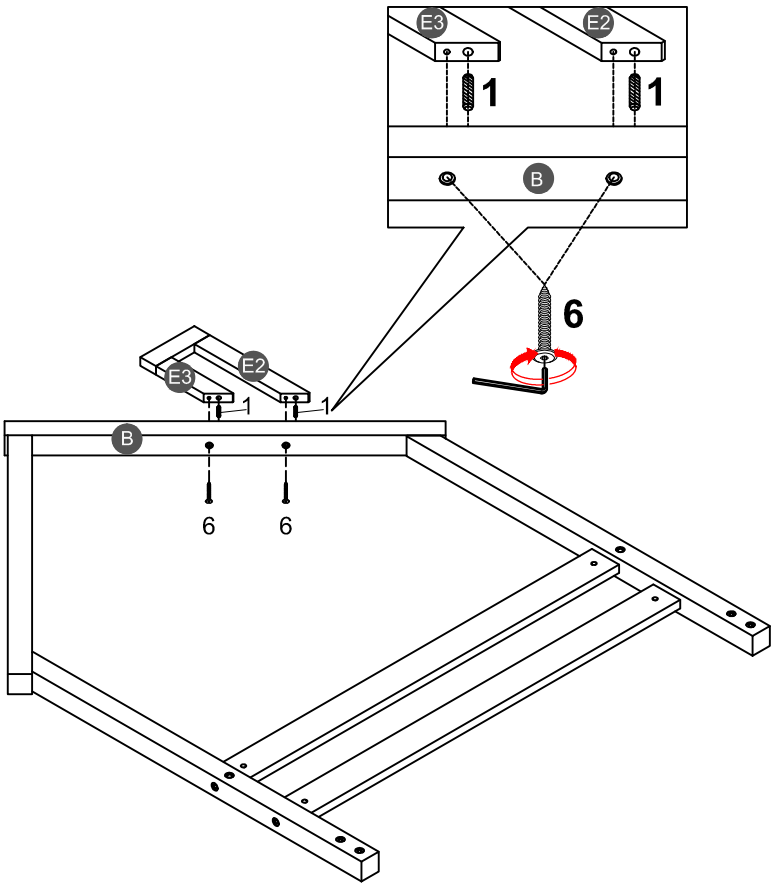

STEP 5:

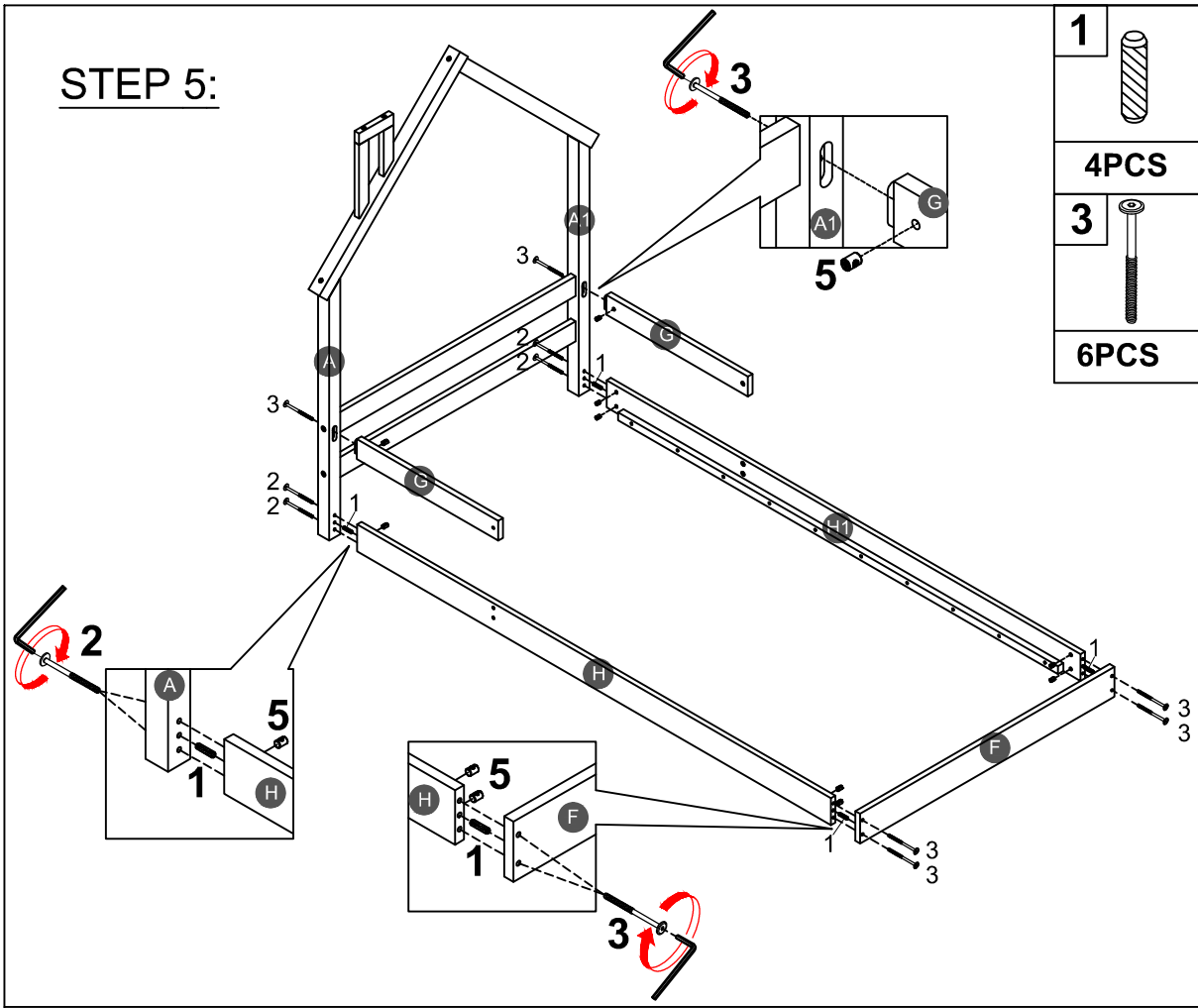

STEP 6:

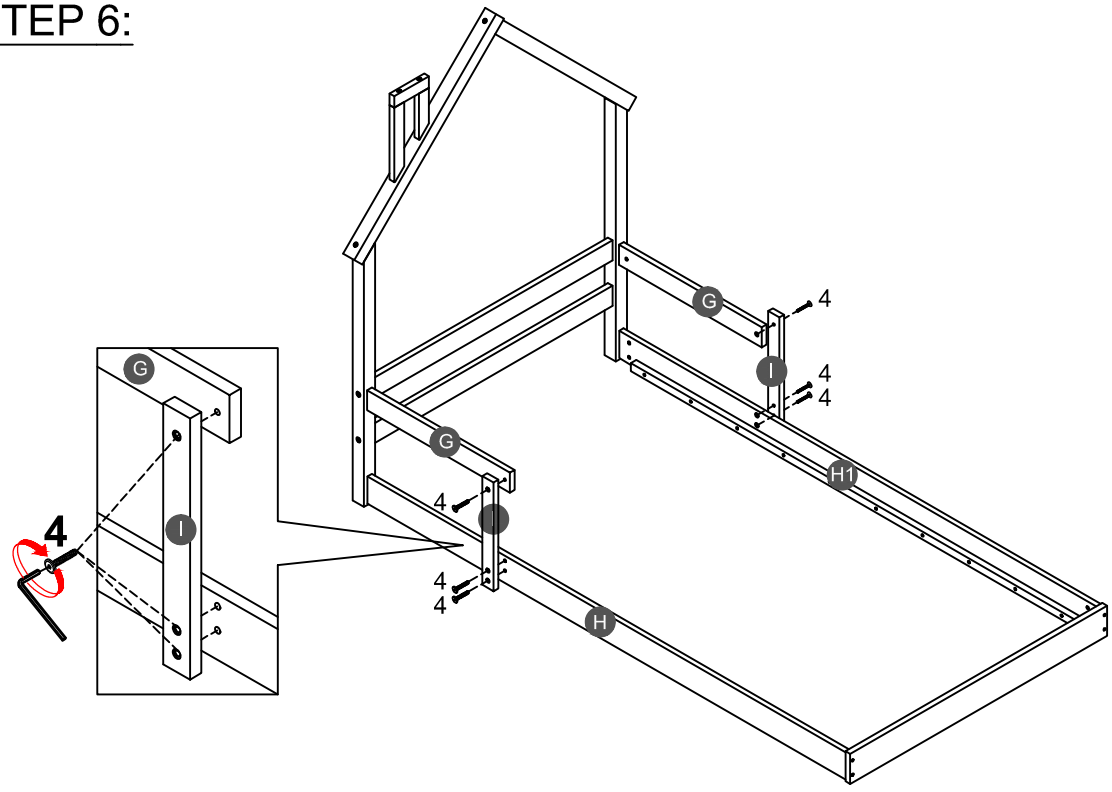

7

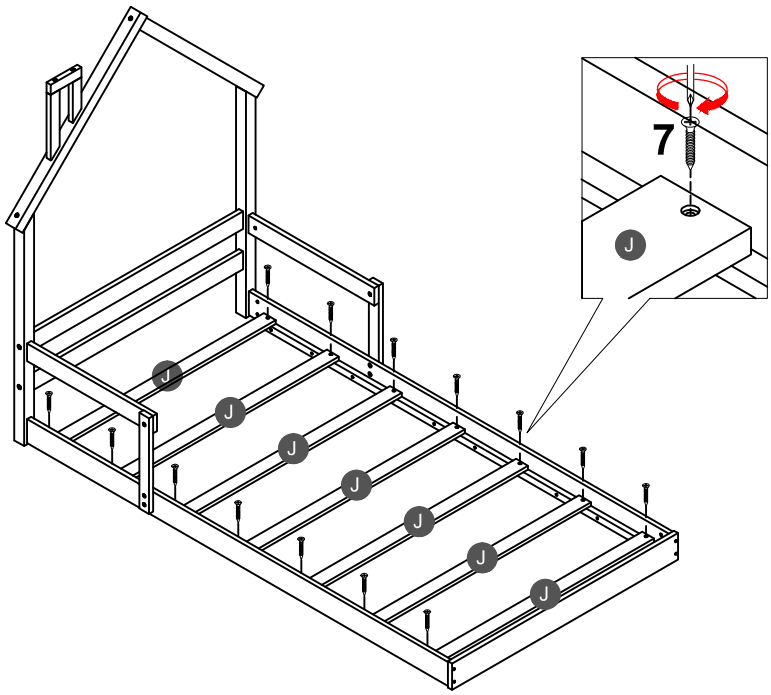

14PCS

STEP 7:

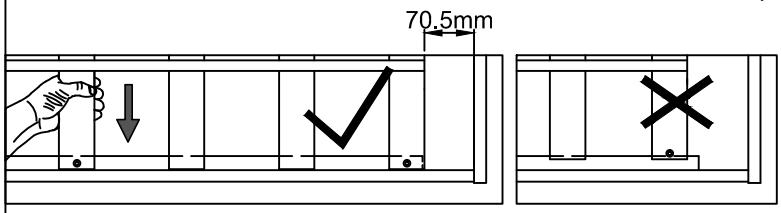

Note: Do not lock the screws of the bed slats to the outermost edge of the bed slats, you need to leave a certain space at the edges, otherwise it will cause the board to break. Do not lock the bed slats on the edge of the wood, please hold firmly before screwing , hold it in place with one hand, then lock the screw.

