Sidetable

CTG075 | 2 Drawers

Assembly Instructions

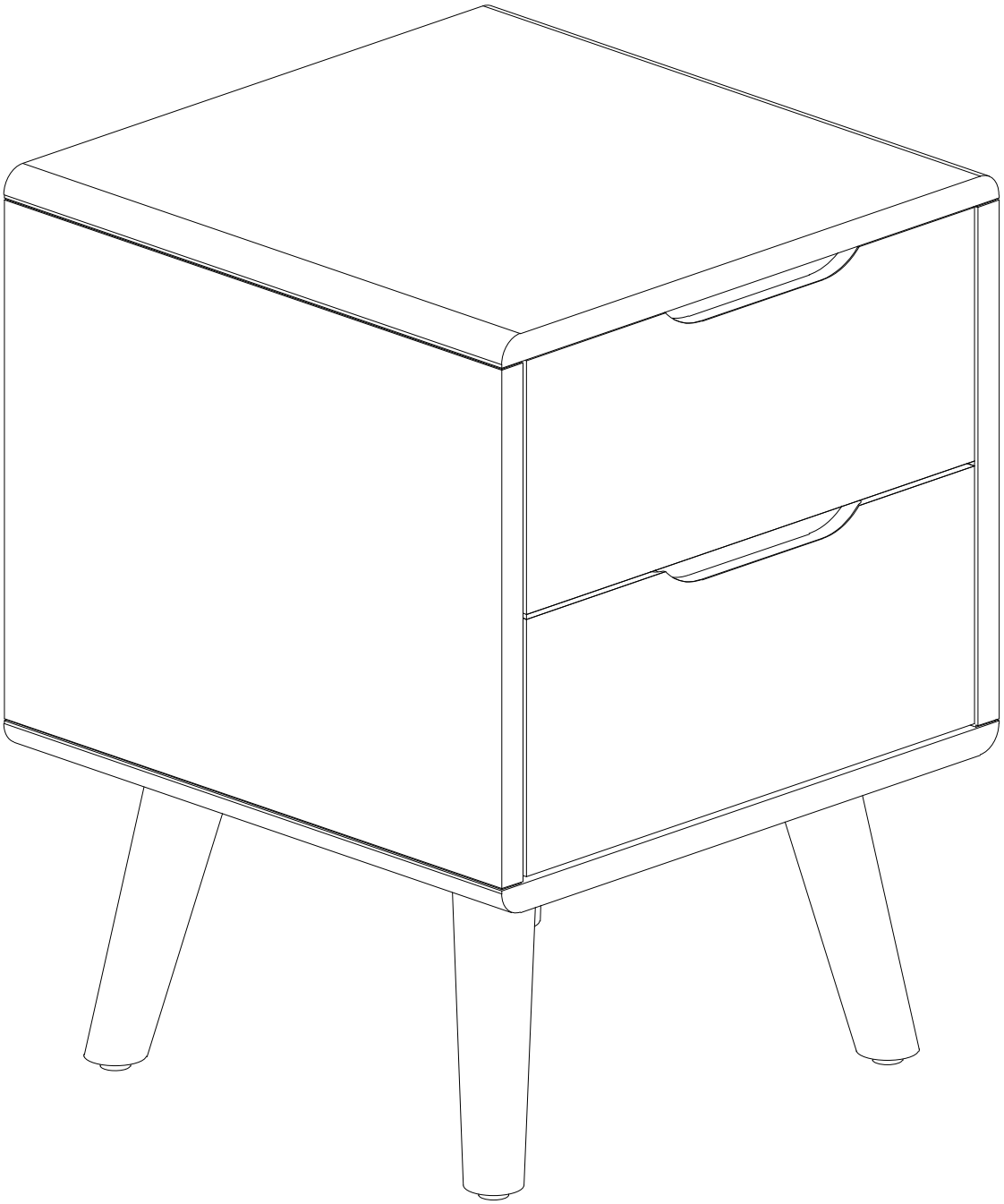

Assembly Diagram

CTG075 | 2 Drawers

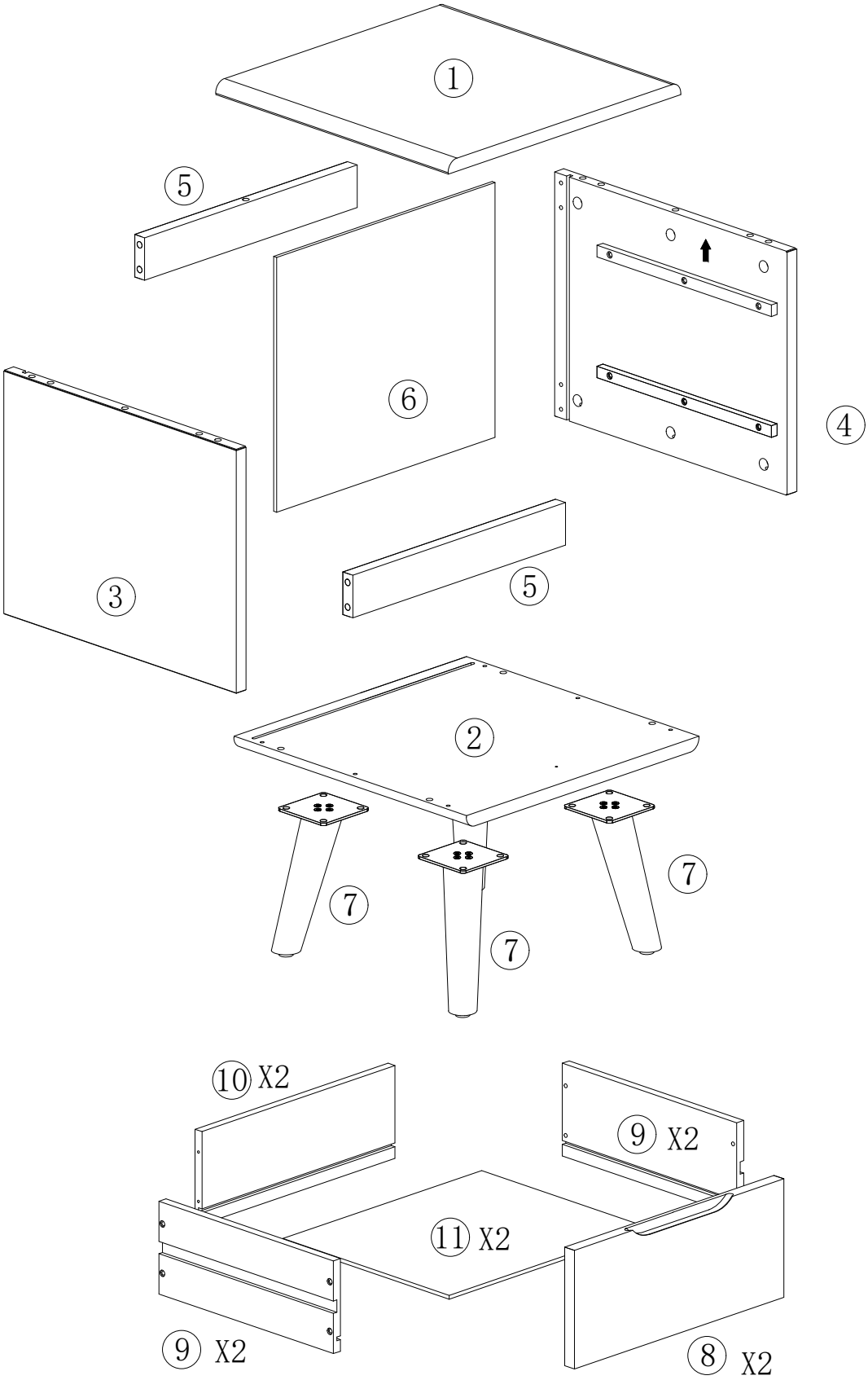

Parts List

CTG075 | 2 Drawers

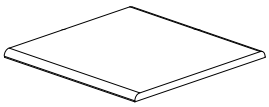

1 Top panel

400 × 400 × 17MM

Quantity: 1

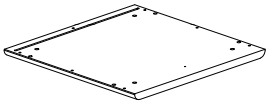

2 Base panel

400 × 400 × 17MM

Quantity: 1

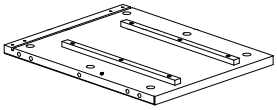

3 Left side panel

316 × 400 × 27MM

Quantity: 1

Slides preinstalled

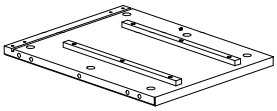

4 Right side panel

316 × 400 × 27MM

Quantity: 1

Slides preinstalled

Parts List

CTG075 | 2 Drawers

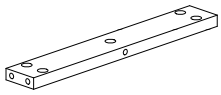

5 Upper / lower rear crossbar

366 × 55 × 17MM

Quantity: 2

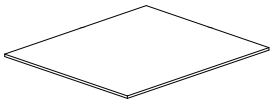

6 Back panel

326 × 376 × 5MM

Quantity: 1

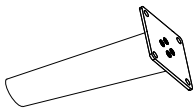

7 Leg with mounting plate

158 × Ø40MM

Quantity: 4

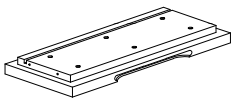

8 Drawer front assembly

360 × 153.5 × 29MM

Quantity: 2

Parts List

CTG075 | 2 Drawers

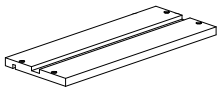

9 Drawer side

300 × 120 × 12MM

Quantity: 4

Slides preinstalled

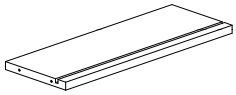

10 Drawer back

332 × 120 × 12MM

Quantity: 2

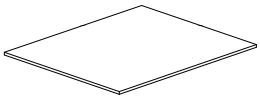

11 Drawer bottom

342 × 286 × 5MM

Quantity: 2

Hardware & Tools

CTG075 | 2 Drawers

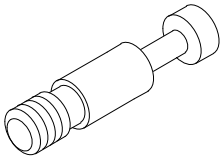

A Cam bolts

L=40MM

Quantity: 22 + 2

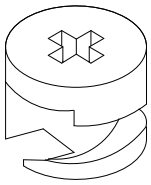

B Cam locks

Ø15 × 11MM

Quantity: 22 + 2

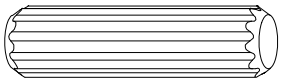

C Wood dowels

Ø8 × 30MM

Quantity: 8 + 1

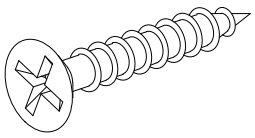

D Flat-head screws

#8 × 30MM

Quantity: 16 + 2

Coarse thread

Hardware & Tools

CTG075 | 2 Drawers

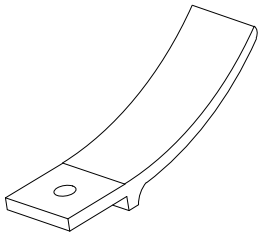

E Drawer retaining clips

L=50MM

Quantity: 2

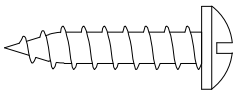

F Wood screws

#3.5 × 15MM

Quantity: 2

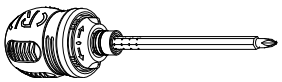

G Ratchet screwdriver

M6 × 136MM

Quantity: 1

Reusable tool

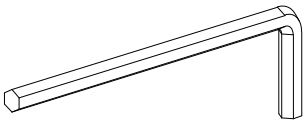

H Hex key

M4 × 100MM

Quantity: 1

Reusable tool

Hardware & Tools

CTG075 | 2 Drawers

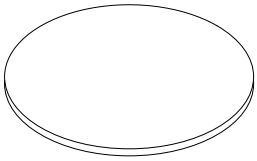

I Cover stickers

20MM

Quantity: 10 + 1

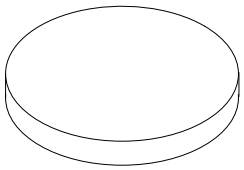

J Adhesive pads

Ø25 × 3MM

Quantity: 4

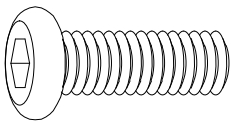

K Hex socket bolts

M6 × 12MM

Quantity: 16 + 1

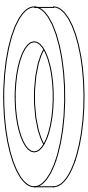

L Washers

M6 × 13MM

Quantity: 16 + 1

Ratchet Screwdriver

CTG075 | 2 Drawers

1. Manual operation setting
2. Ratchet right setting
3. Ratchet right setting
4. Press down for bit removal and retraction.

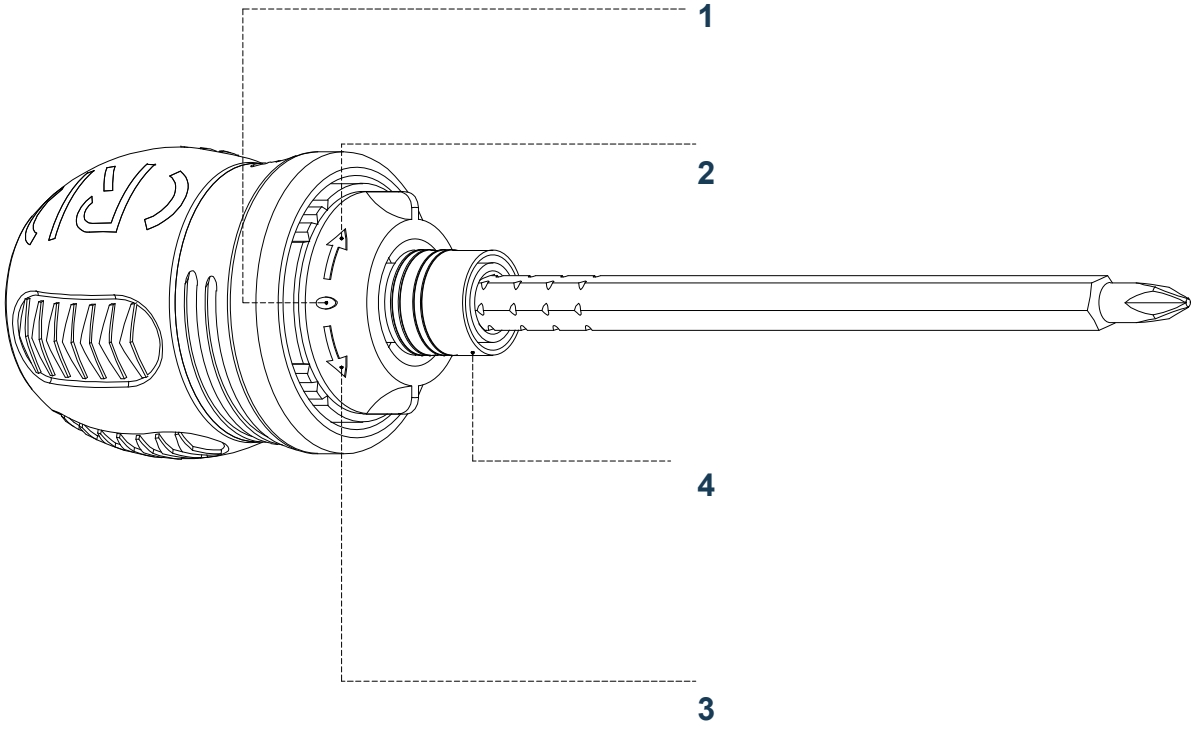

Safety Warnings

CTG075 | 2 Drawers

Place the unit on a level surface, or level it with the included hardware when applicable.

Do not sit or stand on the product. Do not allow children to climb, sit or stand on it.

For safety, the unit must be secured to the wall.

Do not use the unit without installing the tip restraint.

The unit can tip over and cause severe injury or death.

Do not exceed the recommended weight limits.

Distribute weight evenly on each level. Keep heavier loads at the bottom.

Before cutting, drilling or hammering into a wall or floor, check for electrical wiring, plumbing and gas lines. Cutting into them can cause serious injury.

Cam Lock Assembly

CTG075 | 2 Drawers

Illustration key: A = cam bolt; B = cam lock.

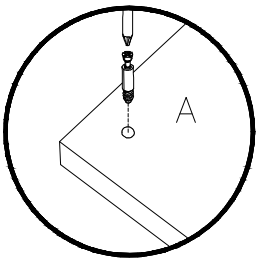

1. Screw the cam bolt into the panel.

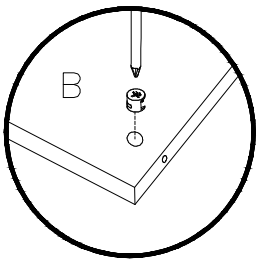

2. Insert the cam lock with its arrow pointing toward the panel edge.

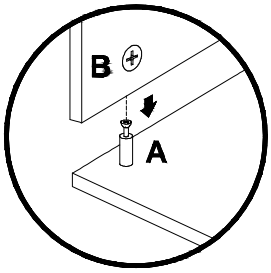

3. Align the cam bolt and cam lock. Insert fully into the cross-bored hole.

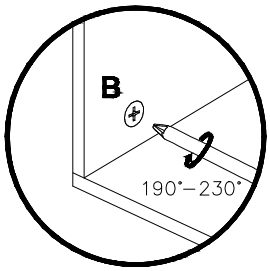

4. Turn the cam lock clockwise 190°–230° to lock the panels.

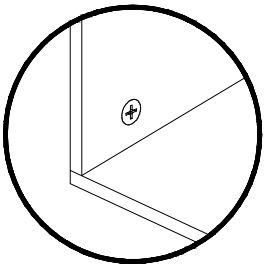

5. Check that the panels fit tightly and the connection is rigid.

Generic Fitting Reference

CTG075 | 2 Drawers

Follow the insertion depths shown for the connector types illustrated.

Illustration labels A and C are generic reference labels.

Use the model-specific parts and hardware lists for assembly.

For a wood dowel, insert it at least halfway.

If necessary, tap gently with a rubber mallet.

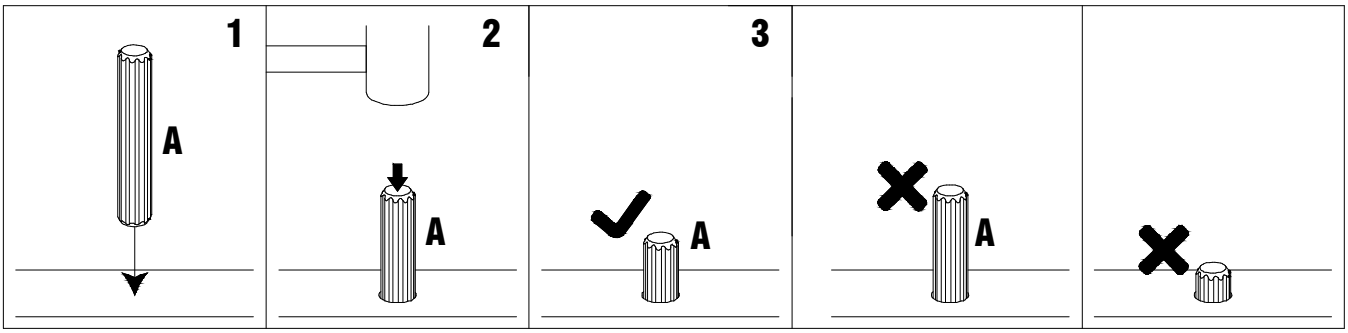

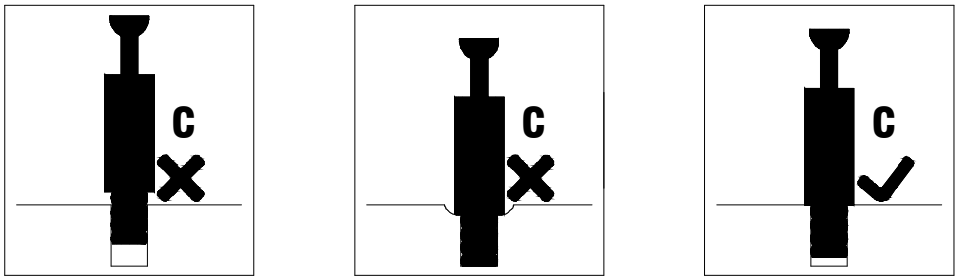

Before Assembly

CTG075 | 2 Drawers

Check all parts against the parts and hardware lists before assembly.

Use the correct screws to avoid splitting or damaging the panels.

The cabinet and drawer slides shown are preinstalled.

Tools G and H are reused throughout assembly.

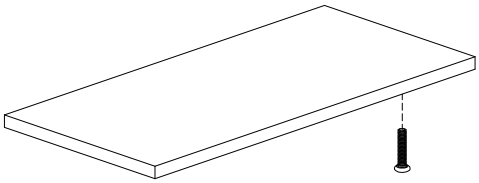

Example

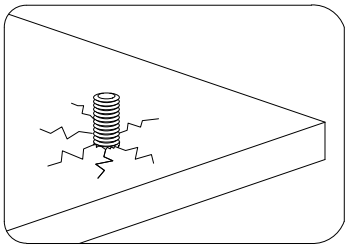

Incorrect: oversized screw

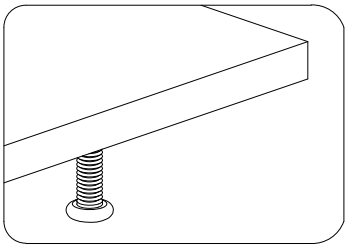

Correct: matching screw

Step 1

CTG075 | 2 Drawers

Install Cam Bolts A in Side Panels 3 and 4 using Tool G.

Hardware: A × 8 Tool: G (reuse)

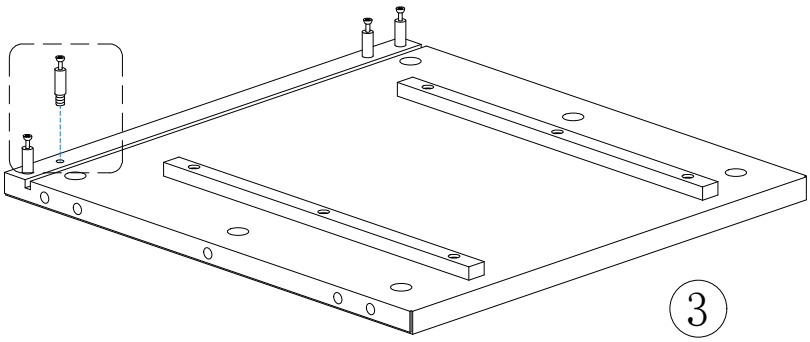

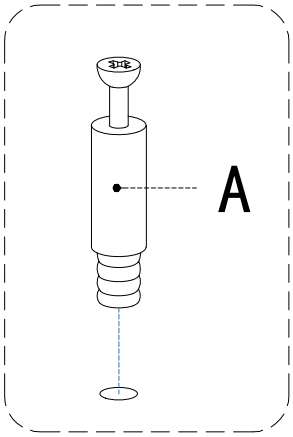

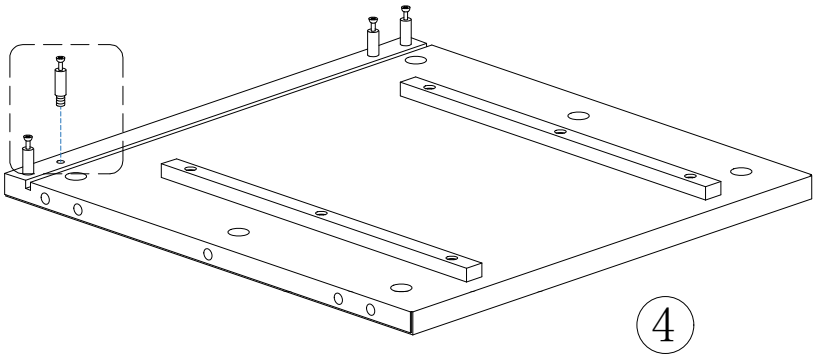

Step 2

CTG075 | 2 Drawers

Install Cam Bolts A in Top Panel 1 and Base Panel 2.

Attach one Retaining Clip E to each panel using Screw F.

Hardware: A × 14 E × 2 F × 2 Tool: G (reuse)

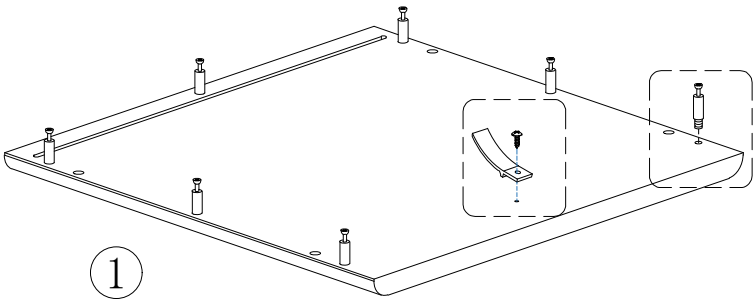

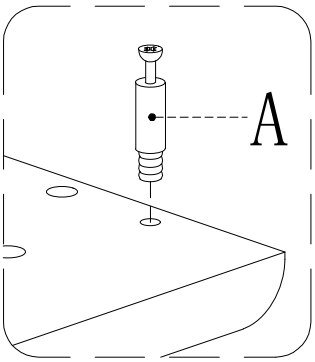

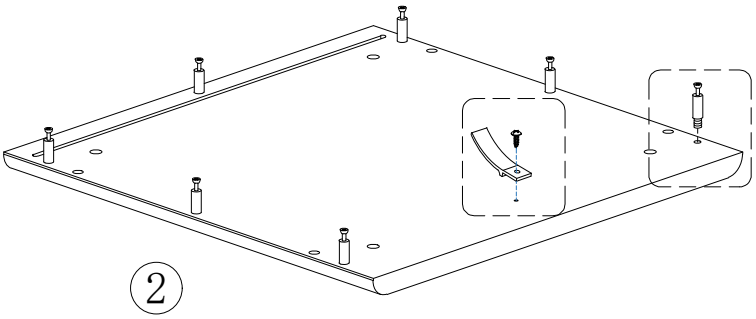

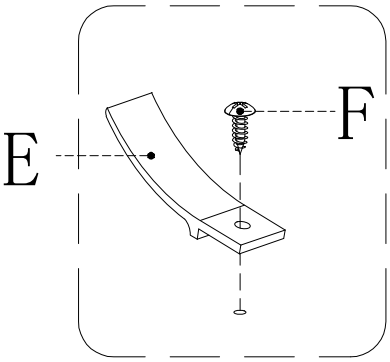

Step 3

CTG075 | 2 Drawers

Join Side Panels 3 and 4 with both Crossbars 5 using Cam Locks B.

Keep the arrows and center holes oriented as shown; apply Stickers I.

Hardware: B × 8 I × 8 Tool: G (reuse)

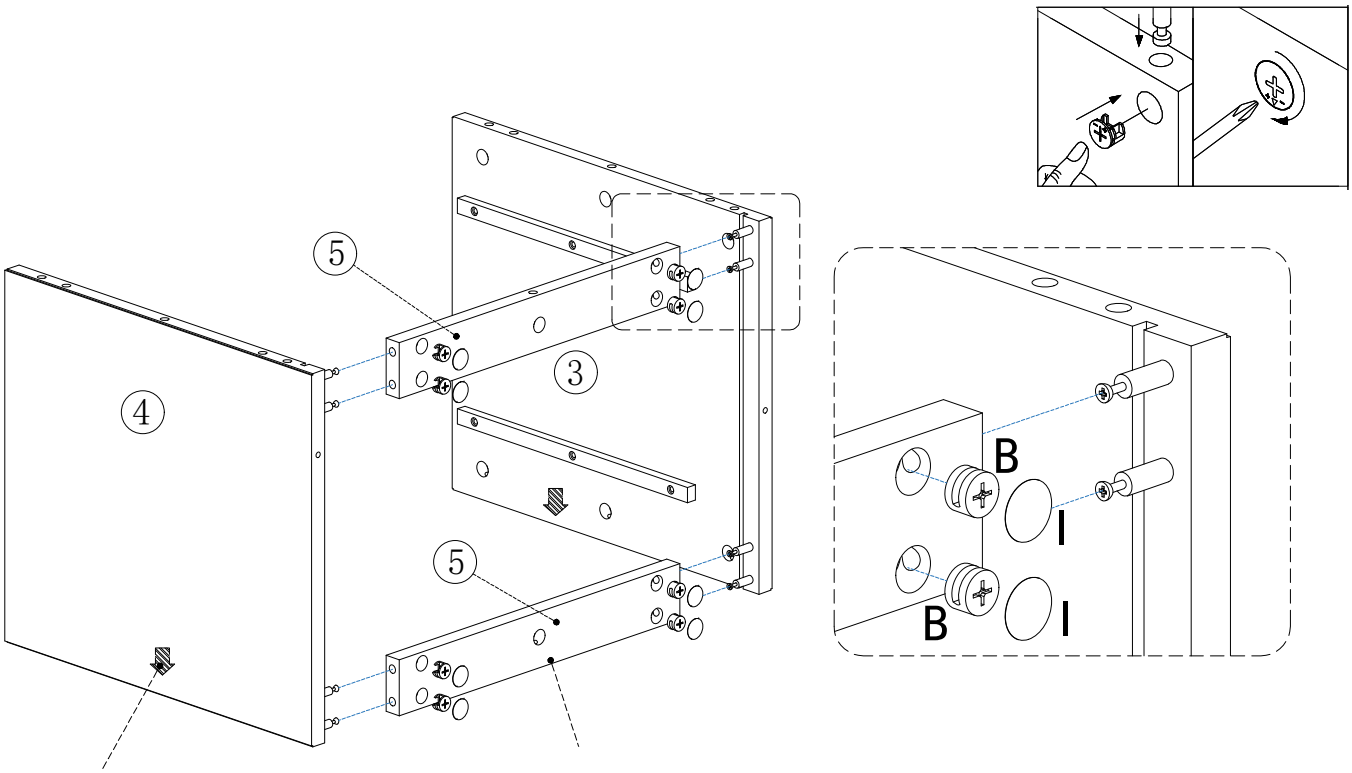

Step 4

CTG075 | 2 Drawers

Attach Top Panel 1 to the assembly from Step 3
using Cam Locks B, Wood Dowels C and Tool G.
Hardware: B × 6 C × 4 Tool: G (reuse)

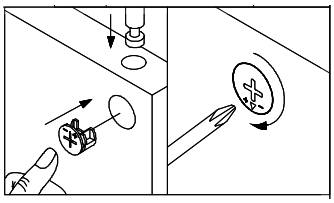

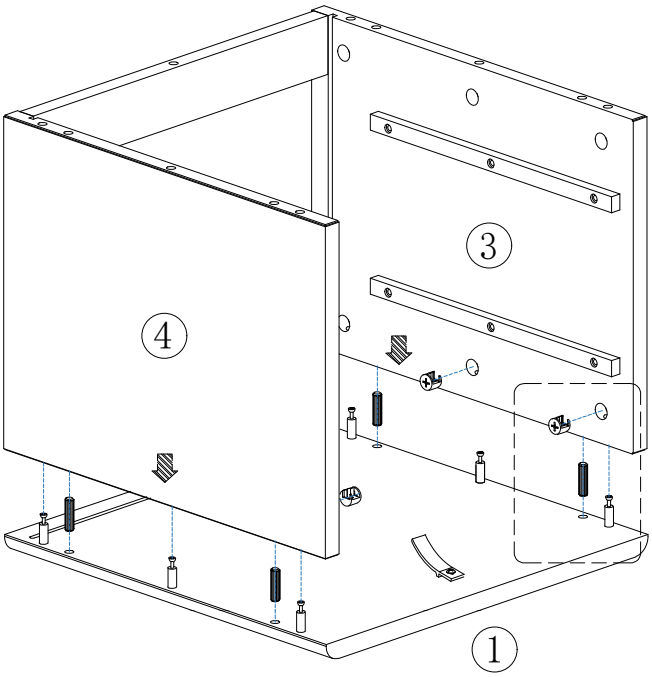

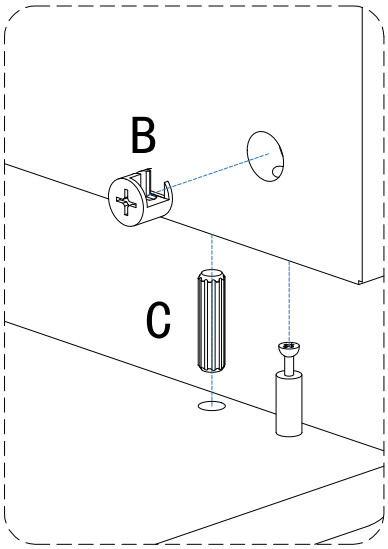

Step 5

CTG075 | 2 Drawers

Slide Back Panel 6 into the grooves of the assembly from Step 4.

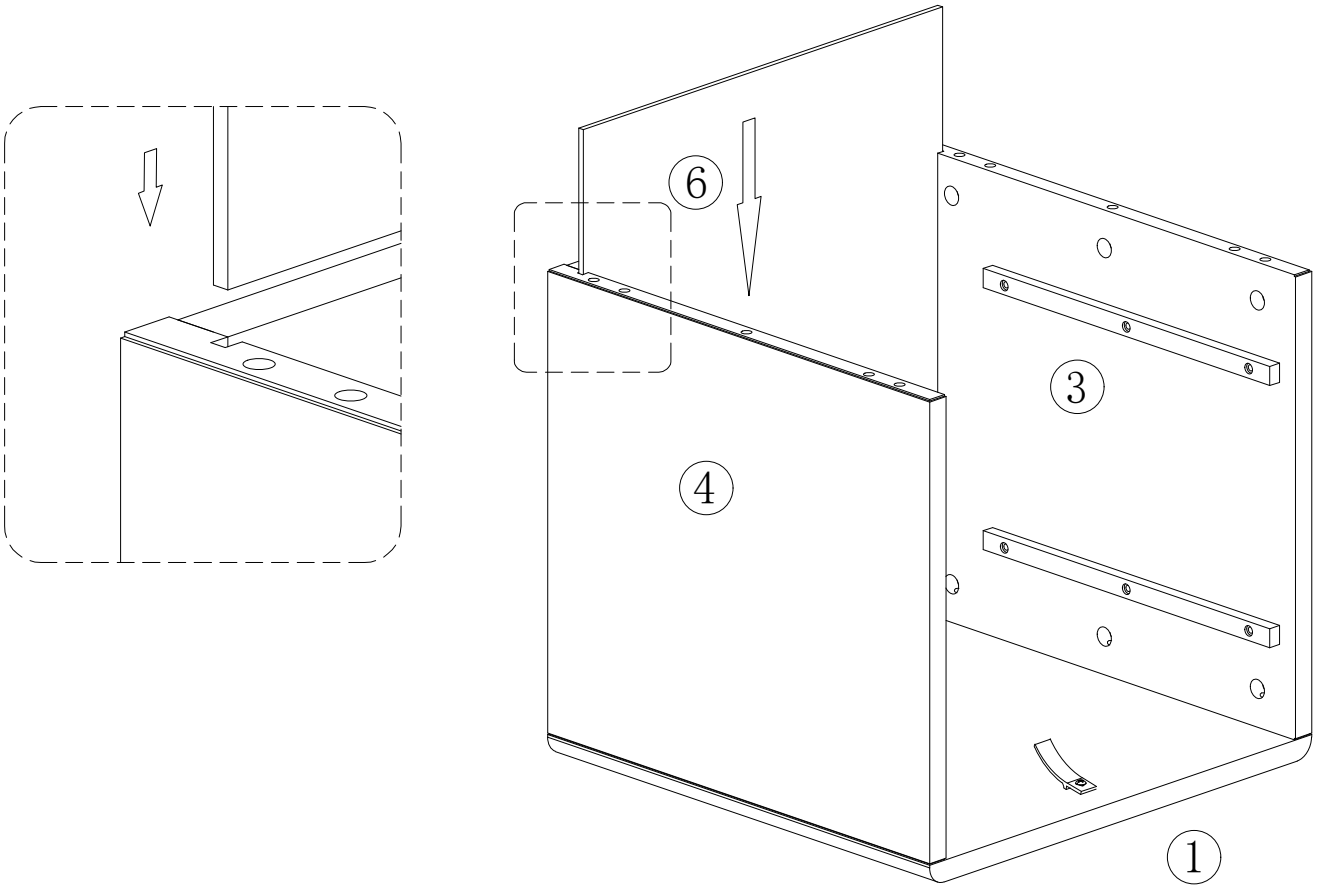

Step 6

CTG075 | 2 Drawers

Attach Base Panel 2 to the assembly from Step 5 using Cam Locks B, Wood Dowels C and Tool G.

Hardware: B × 6 C × 4 Tool: G (reuse)

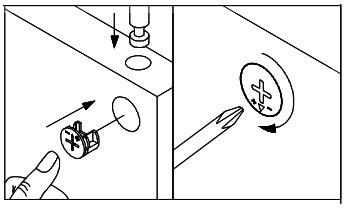

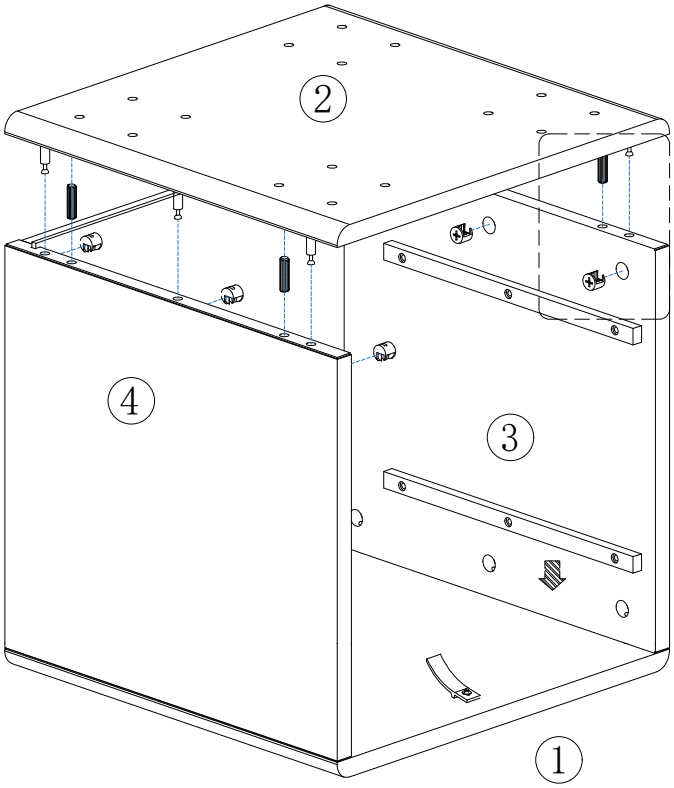

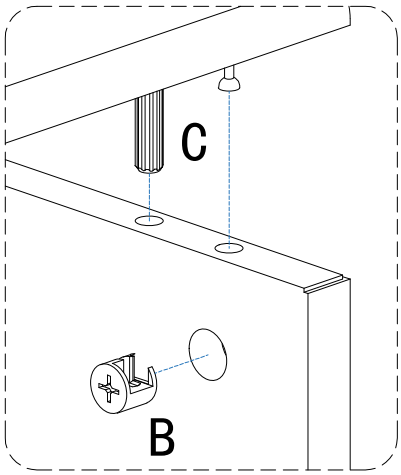

Step 7

CTG075 | 2 Drawers

Fasten Parts 1, 2 and 5 as shown using Cam Locks B.

Cover the indicated holes with Stickers I.

Hardware: B × 2 I × 2 Tool: G (reuse)

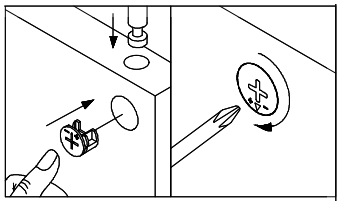

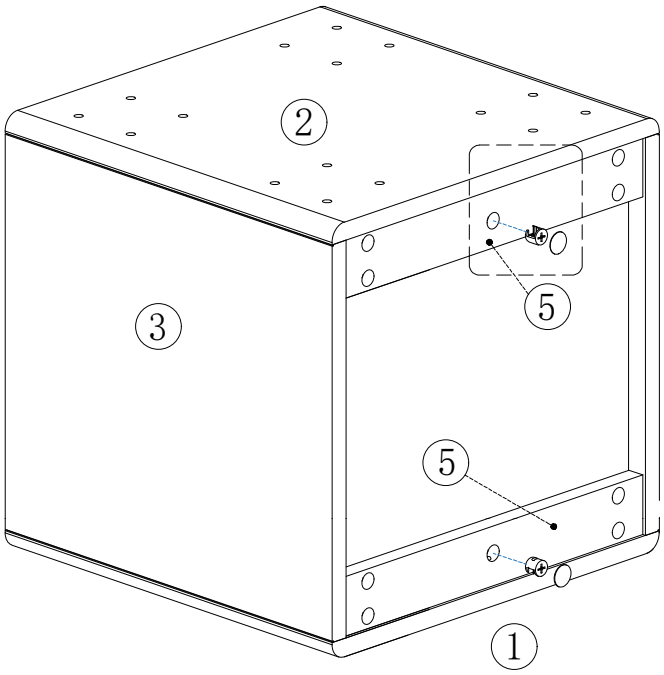

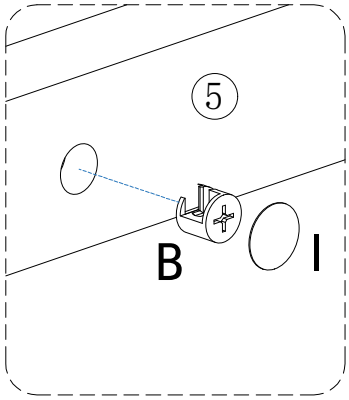

Step 8

CTG075 | 2 Drawers

Attach all four Legs 7 to Base Panel 2 with Bolts K and Washers L.

Follow the mounting-plate orientation in the top view.

Hardware: K × 16 L × 16 Tool: Hex Key H (reuse)

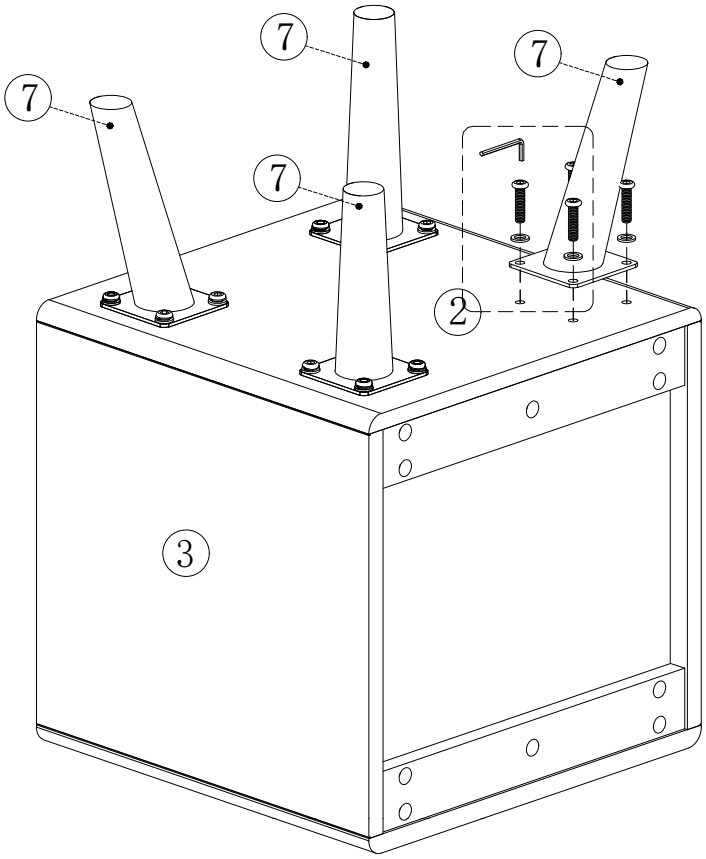

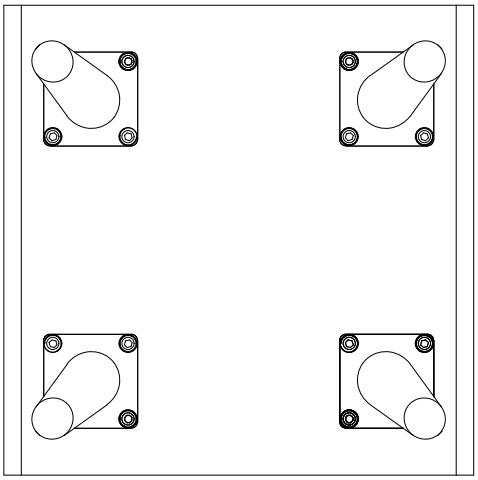

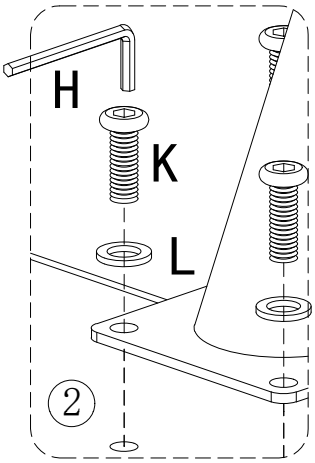

Step 9

CTG075 | 2 Drawers

Apply one Adhesive Pad J to the bottom of each Leg 7.

Hardware: J × 4

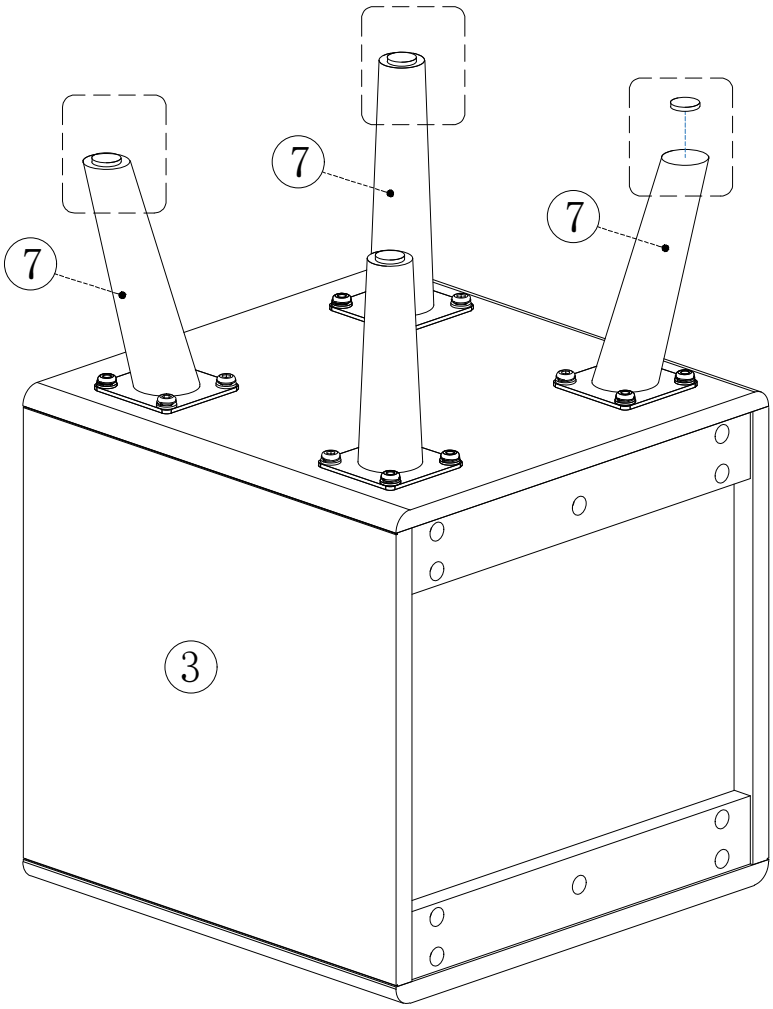

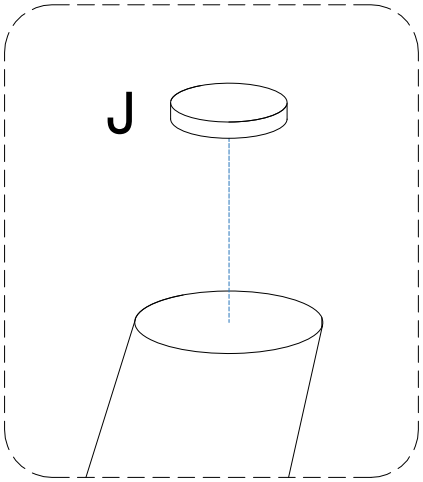

Step 10

CTG075 | 2 Drawers

Attach two Drawer Sides 9 to each Drawer Front Assembly 8 using Screws D and Tool G. Make two identical drawers.

Hardware for both drawers: D × 8 Tool: G (reuse)

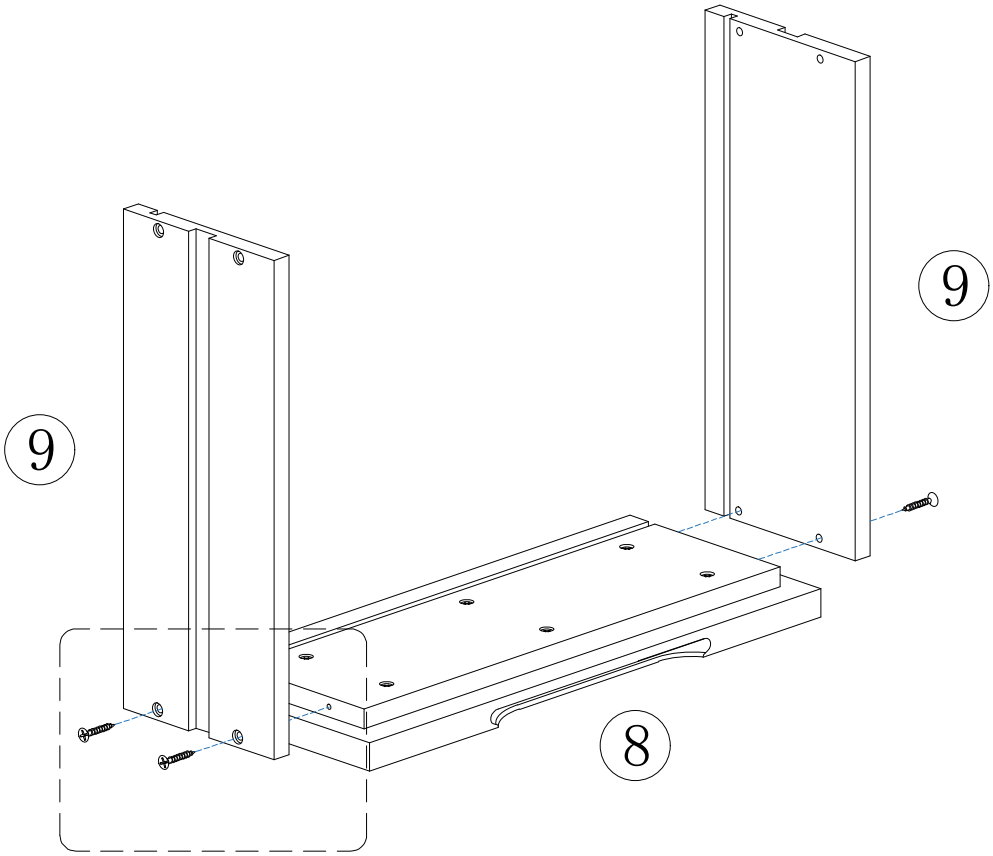

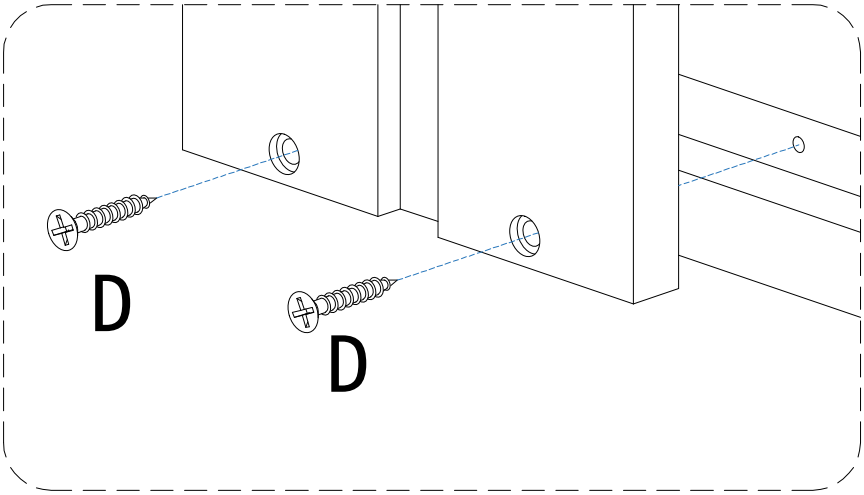

Step 11

CTG075 | 2 Drawers

Slide one Bottom Panel 11 into each drawer assembled in Step 10.
Repeat for both drawers.

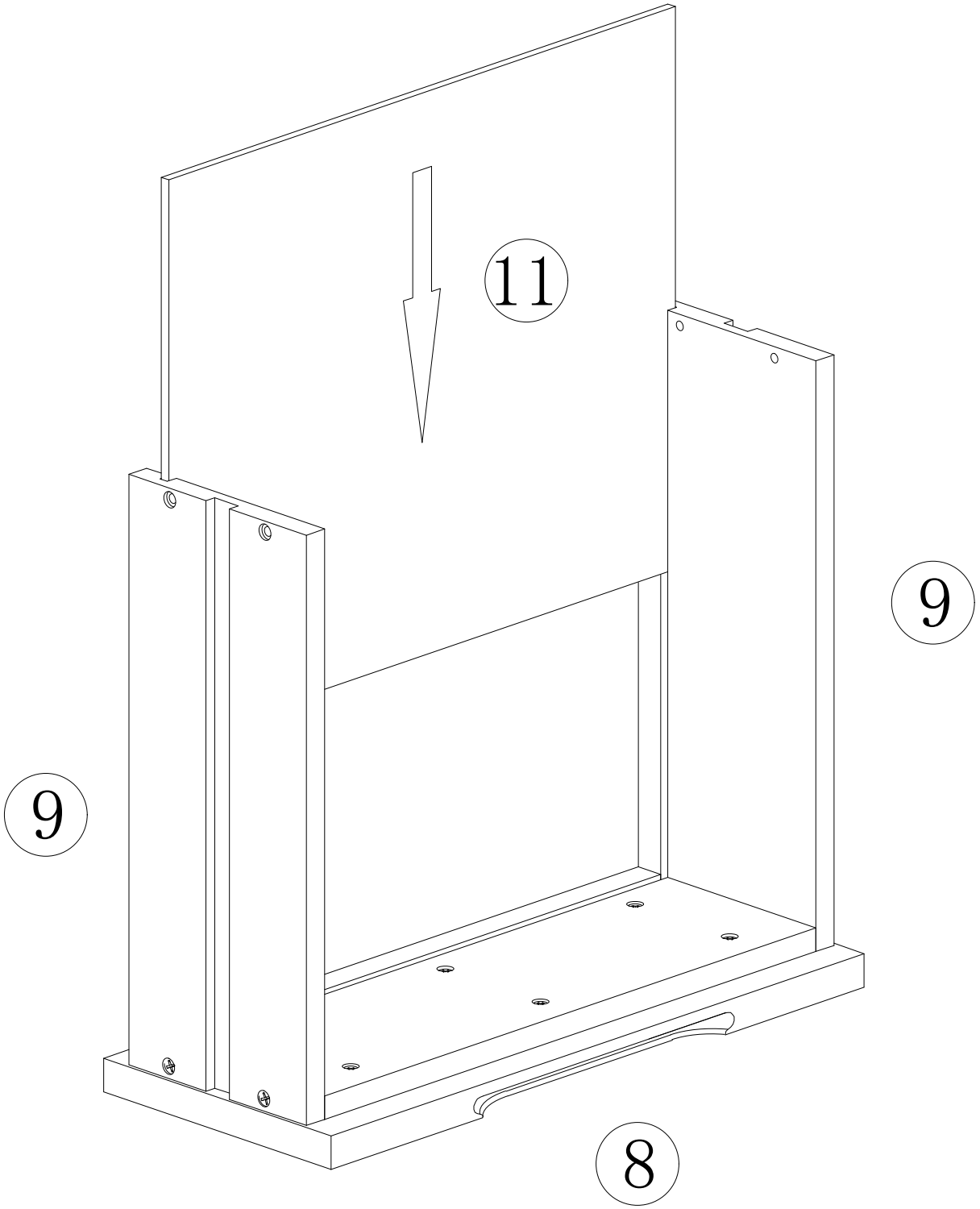

Step 12

CTG075 | 2 Drawers

Attach Back Panel 10 to both Drawer Sides 9 using Screws D.

Repeat for both drawers.

Hardware for both drawers: D × 8 Tool: G (reuse)

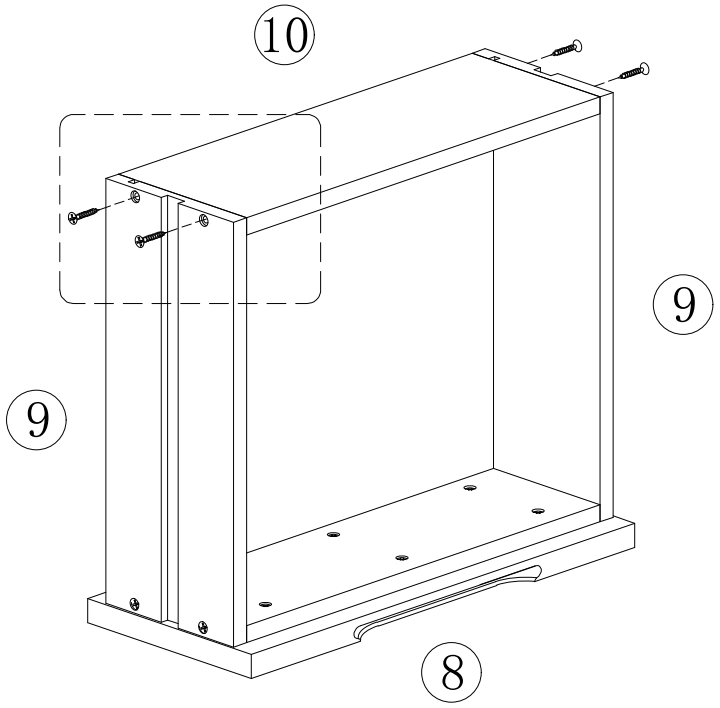

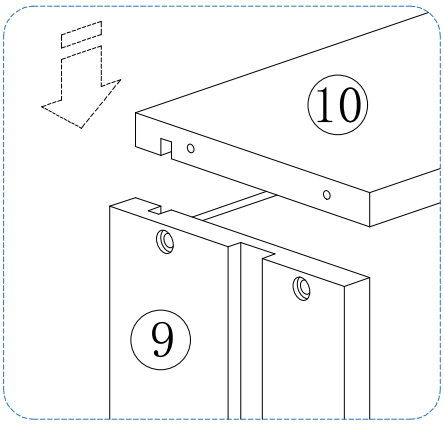

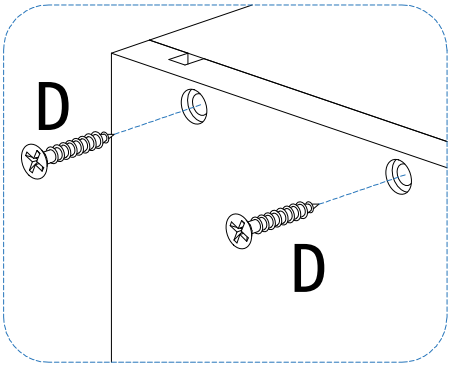

Step 13

CTG075 | 2 Drawers
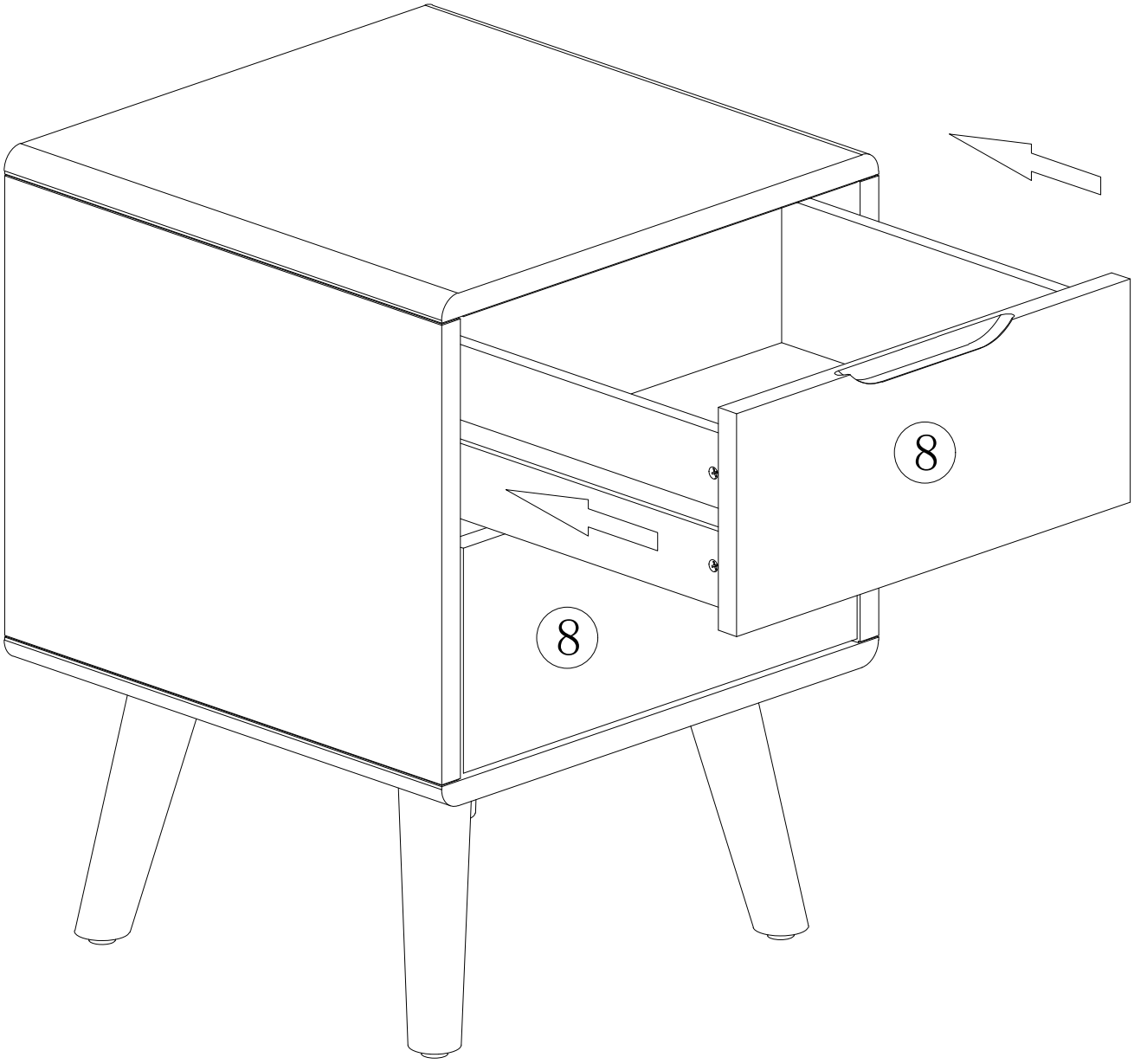
Align the preinstalled slides and slide both assembled drawers into the leveled cabinet from Step 9.