WILLOW COLLECTIONS
MADISON TEAK 36 IN. RIGHT OFFSET SINK BATHROOM VANITY

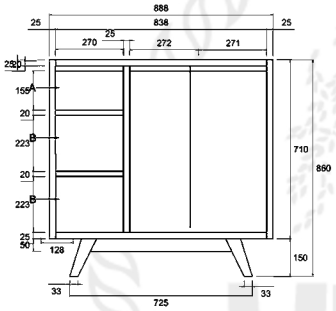

FRONT VIEW

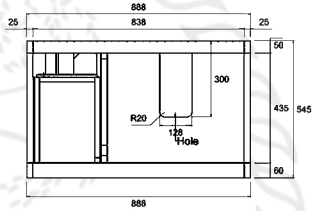
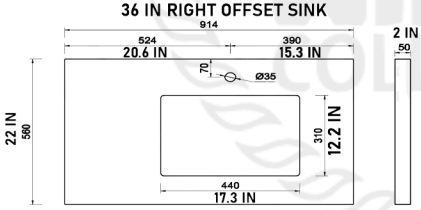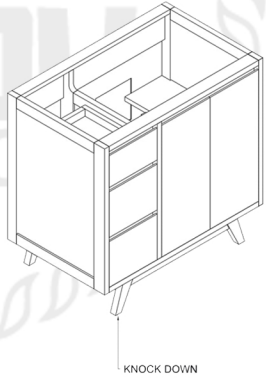
TOP VIEW