CAMMOO

Reliable, Durable, Dependable

Garden Dump Cart

MODEL: TF-S900

⚠ NOTES:

1. Please read and follow all safety rules and operating instructions before first use.
2. Check that all parts are present before assembling. If anything is missing, please contact us immediately.
3. **Returns:** Contact us for a free return shipping label to avoid any unexpected costs to you.
4. **Message Us:** Via the platform (Go to "Your Orders" and find this purchase).

We are committed to resolving your issue!

TABLE OF CONTENTS

Specifications ---------- 1
Safety Precautions ---------- 2
Parts List ---------- 3
Assembly Guidance ---------- 5
DIY Capacity Expansion ---------- 16
Operation Instructions ---------- 20
Troubleshooting ---------- 22
Return / Damage Claim Instructions ---------- 25

Specifications

Product Dimensions	39.4″ x 23.6″ x 20.1″
Maximum Weight Capacity	900 lbs
Heaped Capacity	4 cu.ft

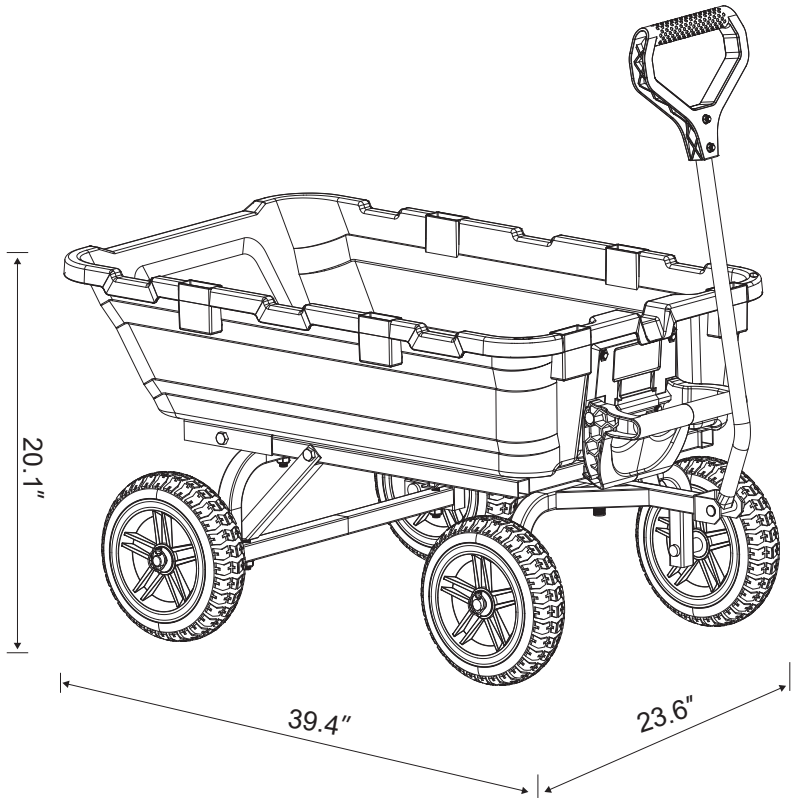

Note: Manual measurements may have slight variations; please refer to the actual product.

Safety Precautions

⚠ WARNING

Before using this product, please carefully read and understand all safety information in this manual. Disregarding these warnings may lead to serious injury or damage.

1. Do not use or park the cart in hazardous areas, such as near open flames, live electrical wires, or standing water, as this may cause product damage or safety hazard.
2. Check that the wheels, cart body, handle, and frame are secure and undamaged before use, as loose or broken parts may cause sudden collapse, load spillage, or loss of control during operation.
3. Keep the cart away from strong corrosive substances (such as acids, alkalis, or fertilizer solutions) to prevent damage to the cart body.
4. Watch for surroundings and path conditions during operation to prevent tip-overs, collisions, and personal injury.
5. Do not allow children to operate the cart. Loss of control may cause tip-overs, resulting in severe injury to children or others.
6. This cart is not designed for climbing, riding, or pushing passengers. Misuse may cause accidents.
7. Avoid slope dumping whenever possible due to tip-over risks. If unavoidable, please stand on the uphill side of the cart and secure the downhill wheel with a heavy object (e.g., stones) for safer operation.
8. Do not exceed the maximum load (900lbs) to prevent breakage or tipping.
9. Clean the cart after use and store it in a dry, well-ventilated place (e.g., a tool shed). Protect it from sun exposure and rain to avoid plastic aging and mental corrosion.
10. For minor paint damage, sand affected areas to bare metal and apply corrosion-resistant primer immediately to prevent rust spread.

Parts List

After unpacking, kindly verify that all parts are present and in good condition. Should anything be missing or defective, let us know and we'll arrange a replacement or new shipment right away.

Part	Name	Diagram	Qty / Pcs
A	Cart Body	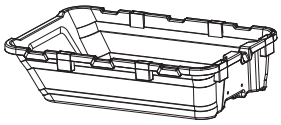	1
B	Dumping Latch	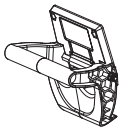	1
C	Bottom Frame	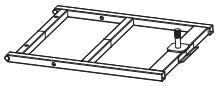	1
D	Pivot Frame	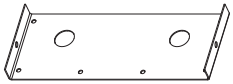	1
E	Front Axle Assembly	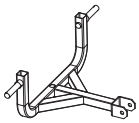	1
F	Diagonal Support Rod		2
G	Rear Axle Assembly		1
H	Wheel		4

Part	Name	Diagram	Qty / Pcs
I	Handle		1
J	Square Spacer		1
K	M8x20 Bolt and Nut		4
L	M8x20 Bolt, Nut and Washer Set		6
M	M10x40 Bolt, Nut and Washer Set	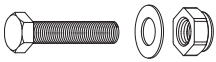	4
N	M10x50 Bolt, Nut and Washer Set		2
O	M10x65 Bolt, Nut and Washer Set		3
P	M16 Nut and Washer		1
Q	Round Lynch Pin		4
R	Axle Gasket		4
S	13-17 mm Wrench		2
T	22-24 mm Wrench		1
U	Screwdriver		1
V	Cart Net	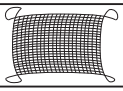	1

Assembly Guidance

Please read before assembly

1. Before assembly, inspect all bolts, nuts, washers, and threads to ensure they are intact and clean.
2. When securing the bolt, always place the washer before tightening the nut.
3. If you feel resistance when starting to tighten, check that the nut is vertically aligned with the thread of the bolt and confirm you are turning clockwise (counterclockwise to loosen).
4. As this cart employs locknuts with high locking friction, securing them requires two wrenches simultaneously: One wrench is used to hold the bolt in place to prevent rotation, while the other wrench tightens the nut clockwise.
5. When using an impact wrench, select the specified socket size according to parts list. If dimensional mismatch occurs, use the included wrench to prevent equipment and component damage risks.

Step 1: Rear Axle Assembly Installation

Part	C	G	O	S
Name	Bottom Frame	Rear Axle Assembly	M10x65 Bolt, Nut and Washer Set	13-17 mm Wrench
Diagram	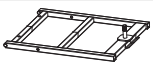			
Qty / Pcs	1	1	2	2

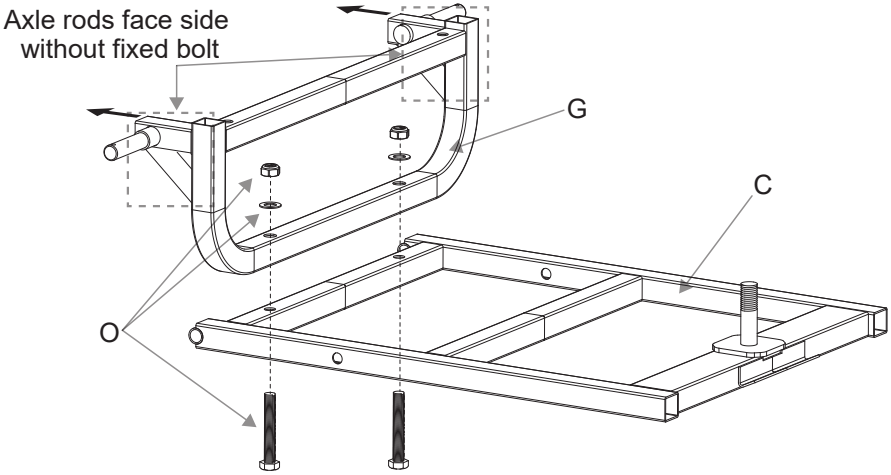

1. Position the bottom frame (C) with the fixed bolt side facing upward. Align the mounting holes of the rear axle assembly (G) to the corresponding holes on the bottom frame (C).

   Note: Ensure the axle rods face the side of the bottom frame that does not have the fixed bolt.

2. Insert two M10x65 bolts (O) through the holes from the bottom of the bottom frame (C), slide a washer and a nut (O) to each bolt end upside.

3. With two 13-17 mm wrenches (S), secure every bolt/nut pair in sequence: use one wrench to hold the bolt in place and use the other one to tighten the nut.

Step 2: Diagonal Support Rod Installation

Part	F	M	S
Name	Diagonal Support Rod	M10x40 Bolt, Nut and Washer Set	13-17 mm Wrench
Diagram		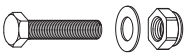	
Qty / Pcs	2	4	2

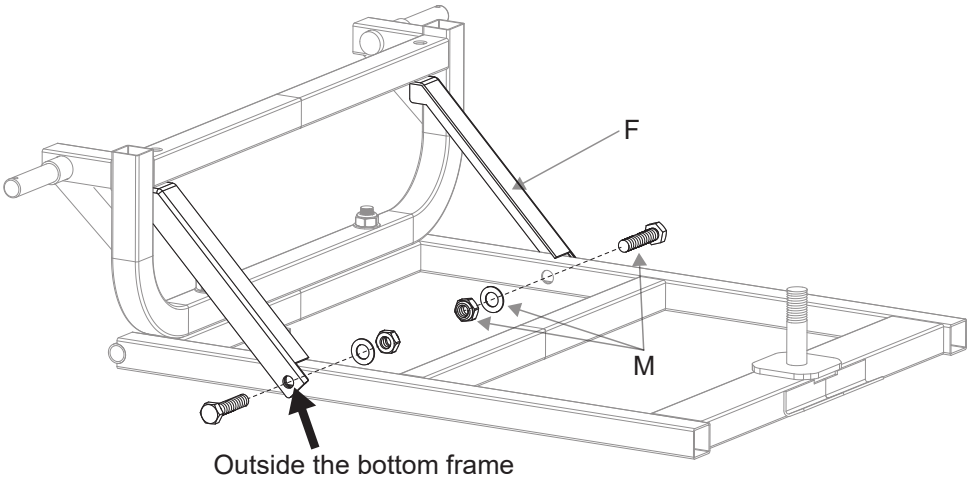

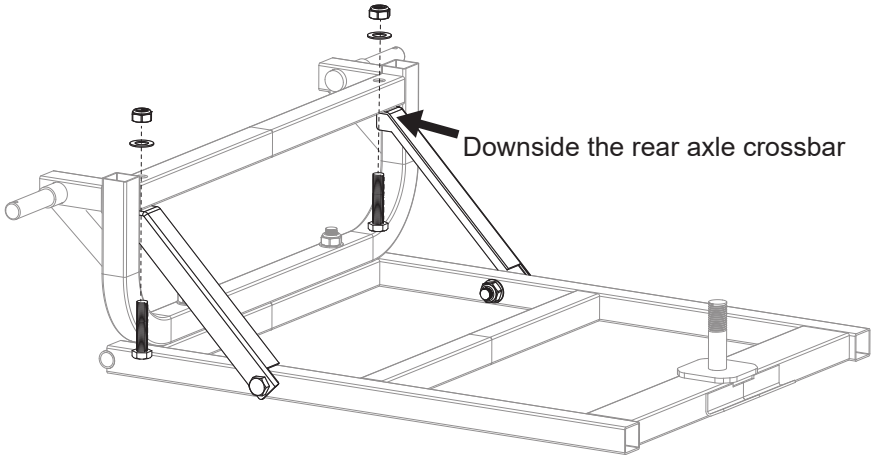

Tip: Securing the Upper Bolt

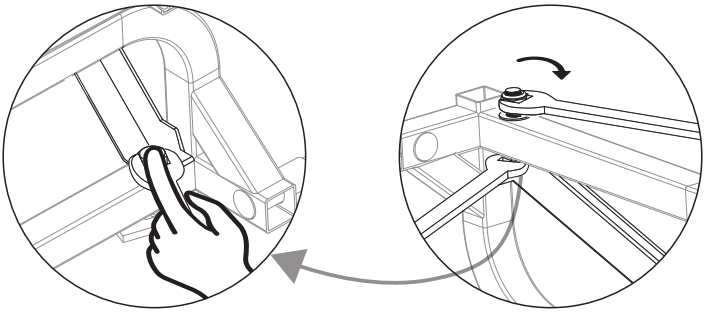

View from below

1. Position one diagonal support rod (F) as shown.
   Note: Ensure the upper end of the diagonal support rod is positioned downside the rear axle crossbar, and the lower end outside the bottom frame.
2. Align the lower hole of the diagonal support rod (F) with the bottom frame's, insert one M10x40 bolt (M) from the outside through the hole, and slide a washer and a nut (M) to the bolt end.
3. Fine-tune the upper end of the diagonal support rod (F) to align its hole with the rear axle assembly's, insert the other M10x40 bolt (M) from the bottom through the hole, slide a washer and a nut (M) to the bolt end.
4. With two 13-17 mm wrenches (S), secure every bolt/nut pair in sequence: use one wrench to hold the bolt in place and use the other one to tighten the nut.
   Note: When tightening the upper bolt/nut pair, apply upward force to the bolt head by hand while holding the bolt in place with the wrench.
5. Repeat the above steps to install the other diagonal support rod (F).

Step 3: Front Axle Assembly Installation

Part	E	J	P	T
Name	Front Axle Assembly	Square Spacer	M16 Nut and Washer	22-24 mm Wrench
Diagram				
Qty / Pcs	1	1	1	1

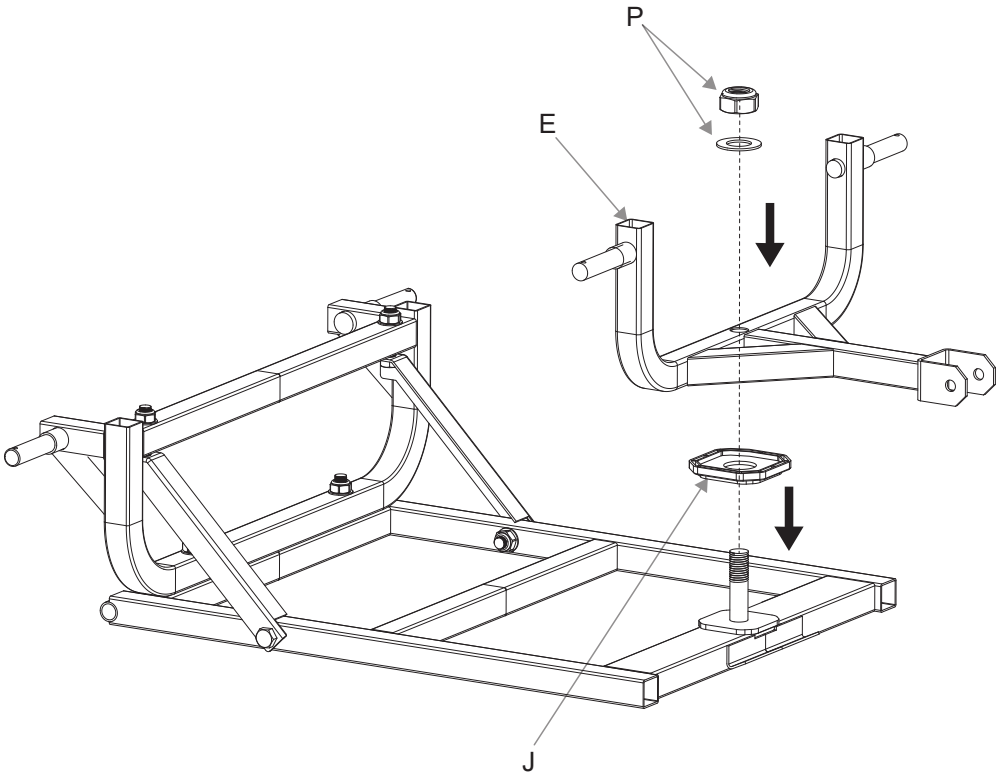

Ensure the recessed side of the square spacer faces upward.

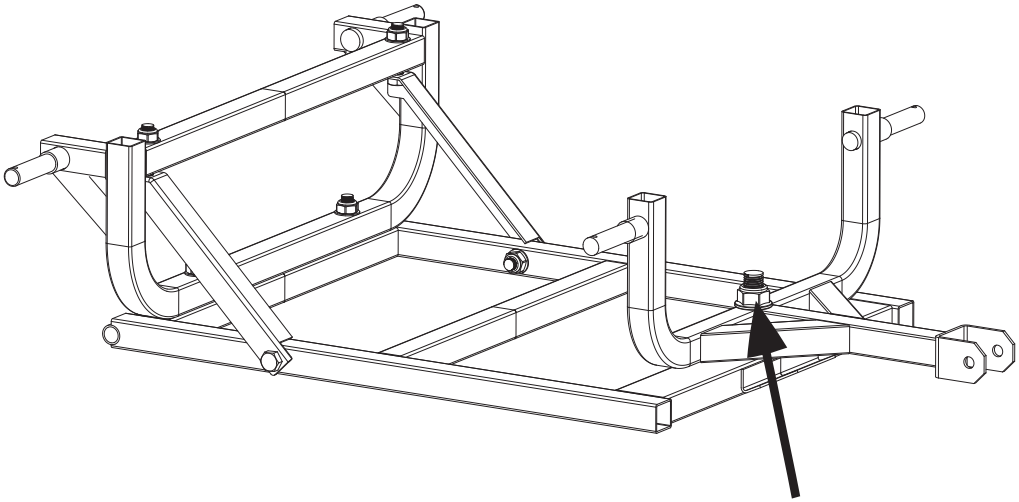

1. Assemble the square spacer (J), the front axle assembly (E), the M16 washer and nut (P) to the fixed bolt in order as shown.
   Note: Ensure the recessed side of the suqare spacer faces upward.
2. Tighten with the 22-24 mm wrench (T) until fully secured.
   Note: Do NOT over-tighten the nut , as this may restrict front-axle pivot movement.

Step 4: Dumping Latch Installation

Part	A	B	K	U
Name	Cart Body	Dumping Latch	M8x20 Bolt and Nut	Screwdriver
Diagram	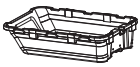			
Qty / Pcs	1	1	4	1

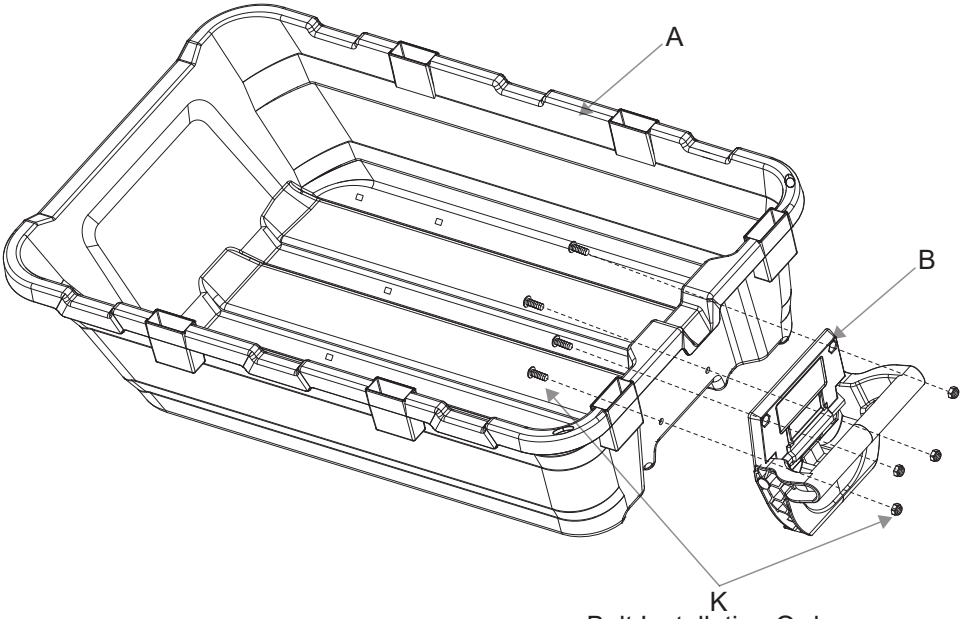

Bolt Installation Order:
upper holes → lower holes

Tip: Securing the Upper Bolt

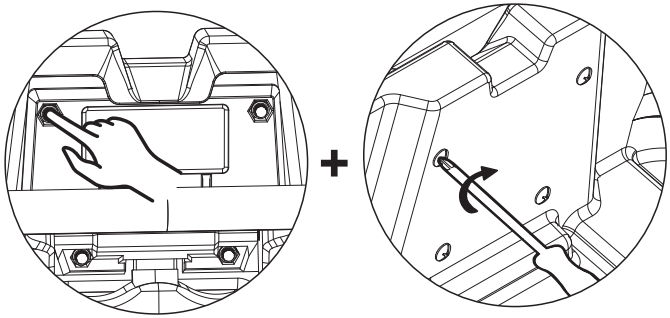

Hold the nut
while tightening the
bolt with screwdriver

1. Ensure the loading surface of the cart body (A) is facing upward. Position the dumping latch (B) to the outside of the cart body (A) and align all matching holes.
2. Insert two M8x20 bolts (K) through the upper pair of the holes from the cart body (A) inside, and then slide a washer and a nut (K) to each bolt end outside to retain the handle for assembly.
3. Repeat the above steps to hand-tighten bolts in the lower holes, completing preliminary fixation of the dumping latch (B).
4. Hold the nut in place with one hand and tighten the bolt with the screwdriver (U). Repeat this process to secure each bolt/nut pair.

Step 5: Pivot Frame Installation

Part	D	L	S
Name	Pivot Frame	M8x20 Bolt, Nut and Washer Set	13-17 mm Wrench
Diagram	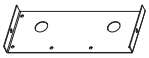	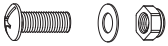	
Qty / Pcs	1	6	1

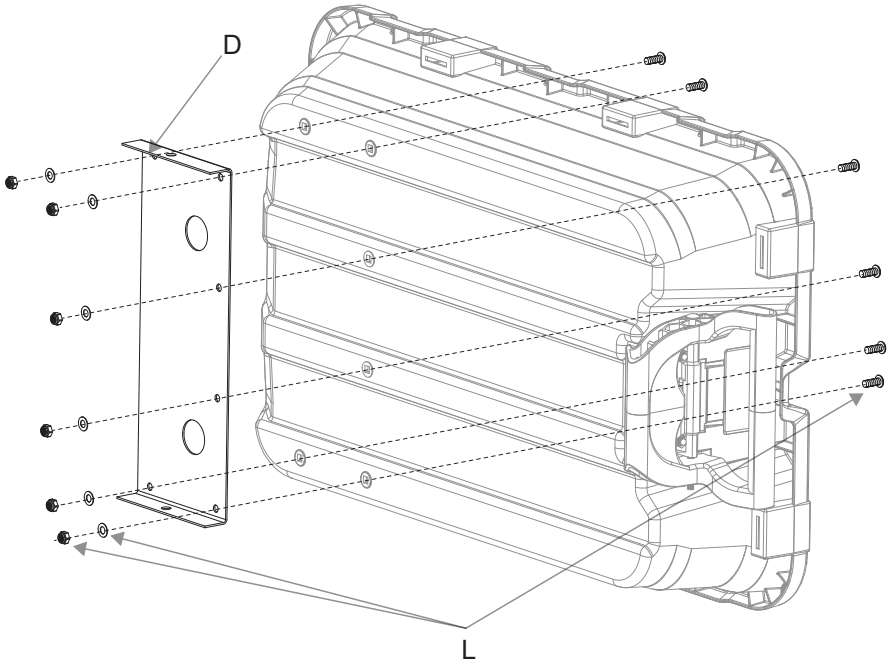

Bolt Installation Order: upper holes → lower holes

1. Stand the cart body upright. Insert two M8x20 bolts (L) through the top holes from inside, then slide a washer and a nut (L) to each bolt end outside to hang the pivot frame (D) for the subsequent assembly.
2. Repeat the above steps to hand-tighten the remaining bolts, completing preliminary fixation of the pivot frame (D).
3. Hold the bolt head in place with one hand and tighten the nut with the 13-17 mm wrench (S). Repeat this process to secure each bolt/nut pair.

Step 6: Frame Attachment

Part	N	S
Name	M10x50 Bolt, Nut and Washer Set	13-17 mm Wrench
Diagram		
Qty / Pcs	2	2

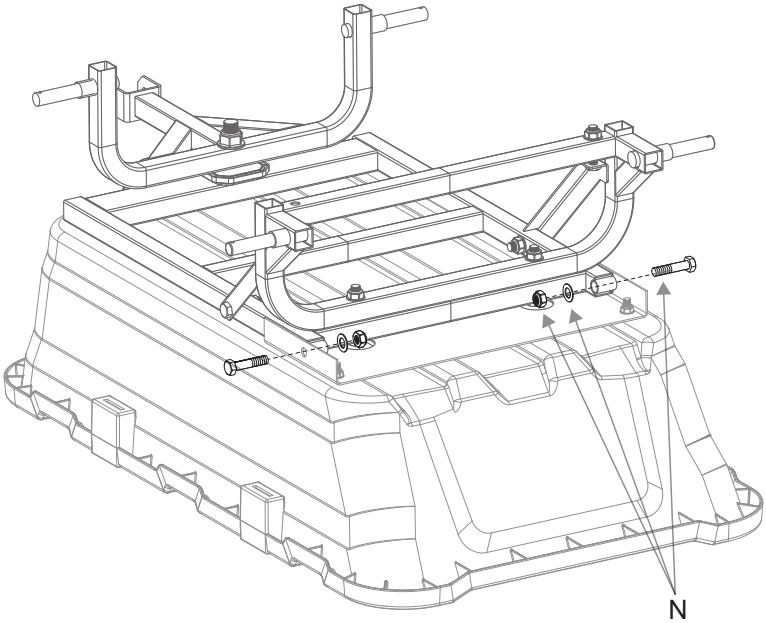

Do NOT over-tighten the bolt

1. Position the loading surface of the cart body downward, align the bottom frame side holes with the corresponding holes of the pivot frame.
2. Insert two M10x50 bolts (N) from the outer sides of the bottom frame, slide the washer and nut (N) to each bolt end.
3. With two 13-17 mm wrenches (S), secure every bolt/nut pair in sequence: use one wrench to hold the bolt in place and use the other one to tighten the nut.

   Note: Do NOT over-tighten the bolt to prevent affecting the dumping operation.

Step 7: Wheel Fixation

Part	H	Q	R
Name	Wheel	Round Lynch Pin	Axle Gasket
Diagram			
Qty / Pcs	4	4	4

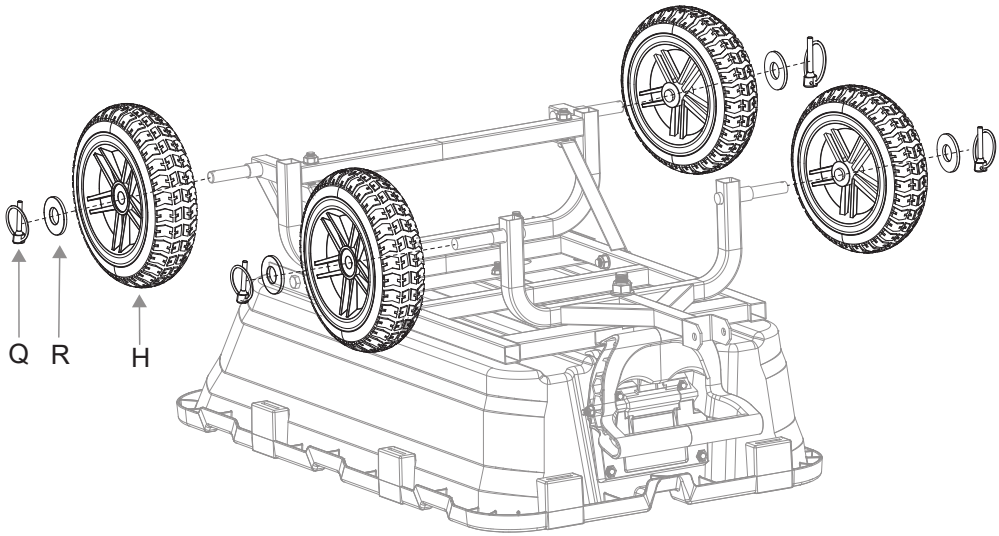

Installing the Round Lynch Pin

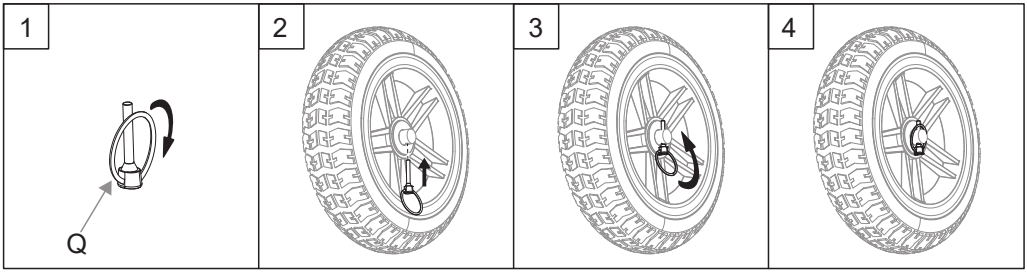

1. Slide one wheel (H) and one axle gasket (R) onto the axle.
2. Take out one round lynch pin (Q). Pry the retaining ring, insert the pin vertically upwards through the axle pin hole (the axle remains stationary while wheels rotate).
3. Press the ring until you hear a 'click' sound indicating it is securely fastened.

   Note: If the ring fails to engage, please rotate the pin and re-press the ring.

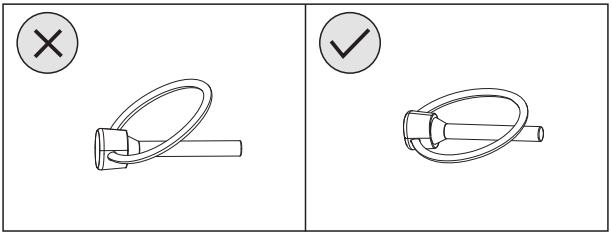

4. Repeat the above steps to fix the remaining wheels.

Step 8: Handle Installation

Part	I	O	S
Name	Handle	M10x65 Bolt, Nut and Washer Set	13-17 mm Wrench
Diagram			
Qty / Pcs	1	1	2

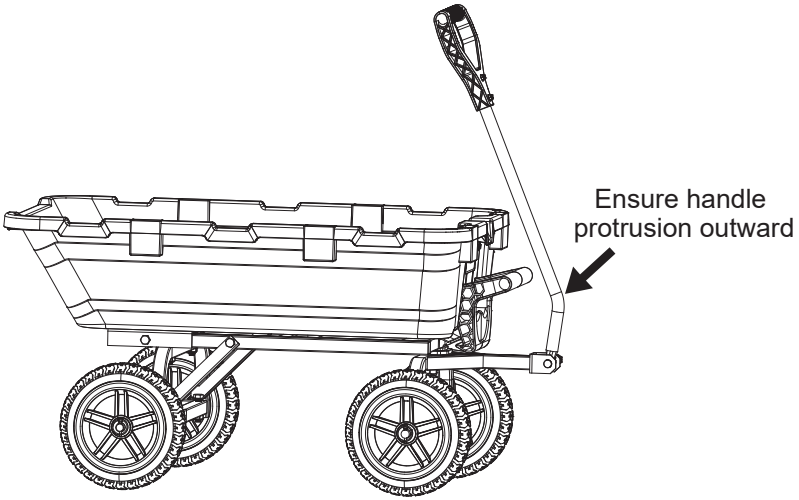

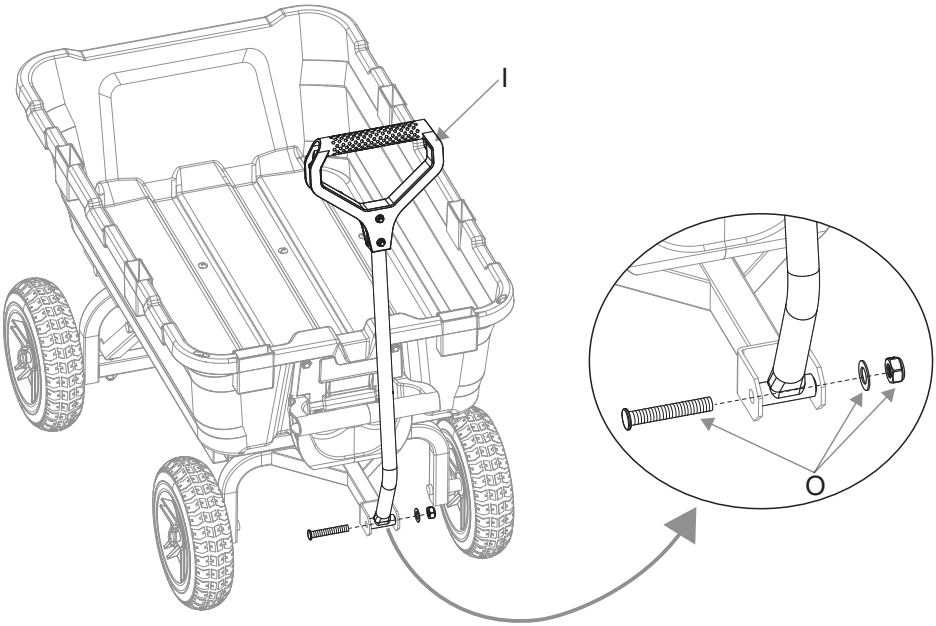

1. Turn the cart upside down with the wheels resting on the ground.
2. Align the hole of the handle (I) with the hole of tow bar as illustrated.
   Note: Ensure the protruding section of the handle faces away from the cart body.
3. Insert the M8x65 bolt (O) from either outer side of the handle (I). On the opposite side, slide the washer and nut (O) to the bolt end.
4. With two 13-17 mm wrenches (S), secure the bolt/nut pair in sequence: use one wrench to hold the bolt in place and use the other one to tighten the nut.

DIY Capacity Expansion

IMPORTANT: This product does not include side panels or installation tools.

This cart allows DIY side panel installation to expand its capacity, enabling larger loads (e.g., sand, leaves) to be carried in a single trip.

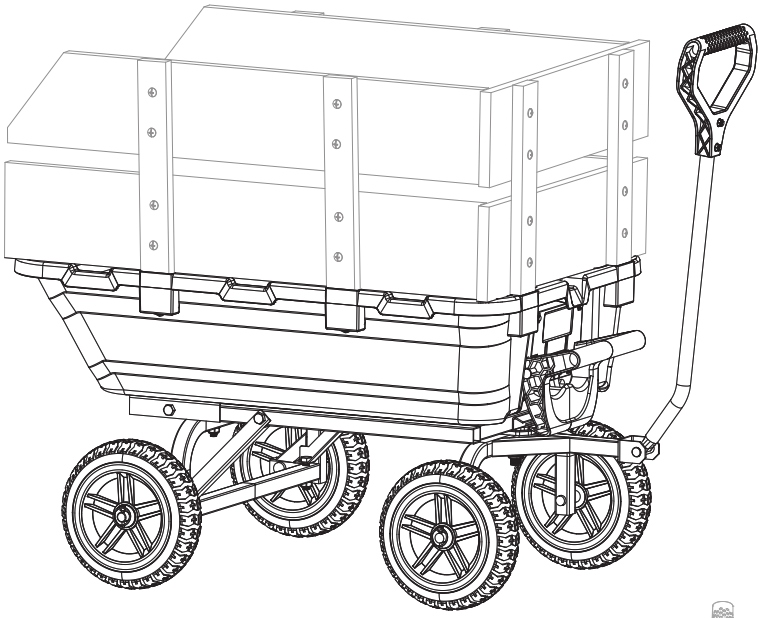

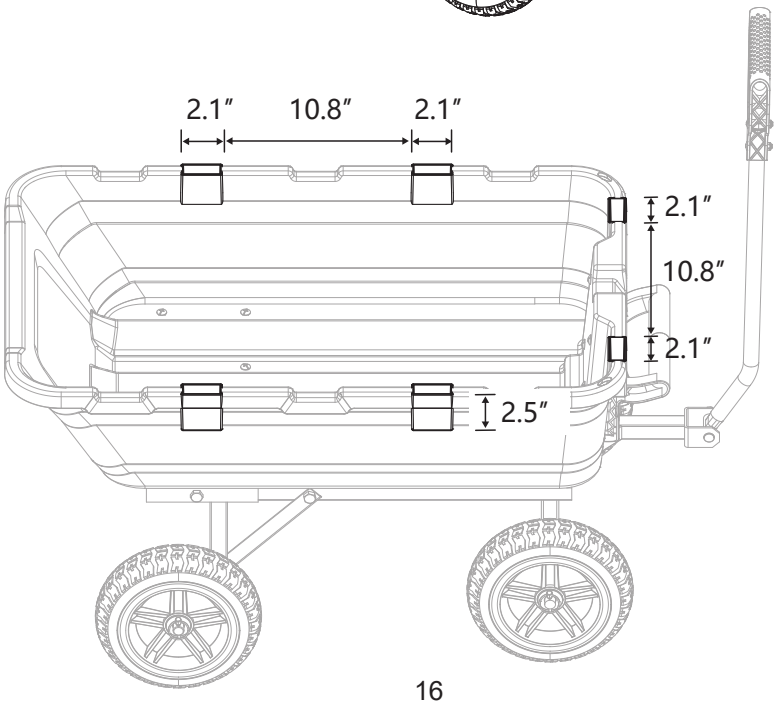

Installation Guide

You can use wooden boards or metal panels as needed (the following instructions use wooden boards as an example). Please prepare materials and required tools according to the following lists.

Note: If using wooden boards, it is recommended to choose lightweight boards. Heavier boards may increase installation difficulty and reduce overall structural stability.

Types	Size	Diagram	Qty / Pcs
Side Panel Board	33 1/4″ x 6″ x 3/4″	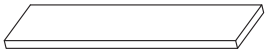	2
45° Angled Side Panel Board	33 1/4″ x 6″ x 3/4″	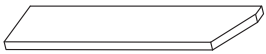	2
Front Panel Board	21 1/2″ x 6″ x 3/4″	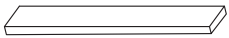	2
Support Strip	15 3/4″ x 2″ x 3/4″	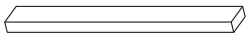	6
Spacer Block	15 3/4″ x 1 1/2″ x 3/4″	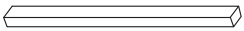	1

TOOL REQUIRED (NOT INCLUDED)



Power Drill

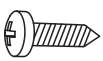

1 1/4″ Screw



Washer

1. Insert each support strip vertically into the slot on the cart body, make sure they are firmly seated and aligned.

   Note: After inserting the support strips, you can drill a hole at the bottom of each and fix with a washer and screw to prevent loosening and splitting.

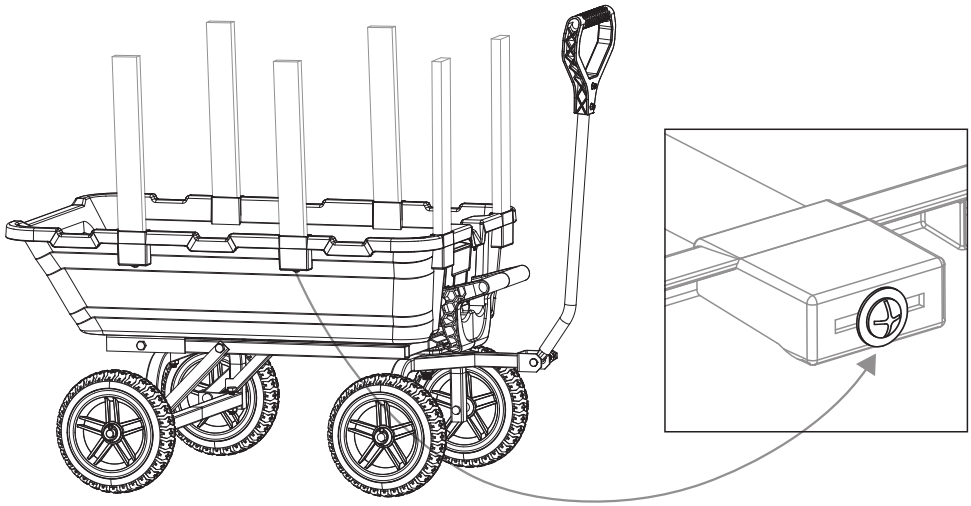

2. Center one front panel board against the inner side of both support strips. Drill pilot holes and secure with 2 or 3 screws for each strip. Place the spacer block on top, repeat for the second board. Remove the spacer block after both boards are installed.

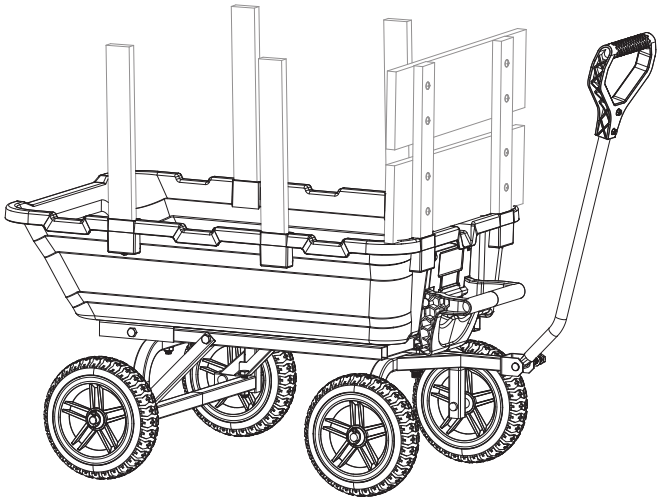

3. Center one side panel board against the inner side of both support strips. Drill and secure with 2 or 3 screws for each strip. Place the spacer block and repeat for the 45° side panel board before removing the spacer block. Repeat the entire process to assemble the other side panel.

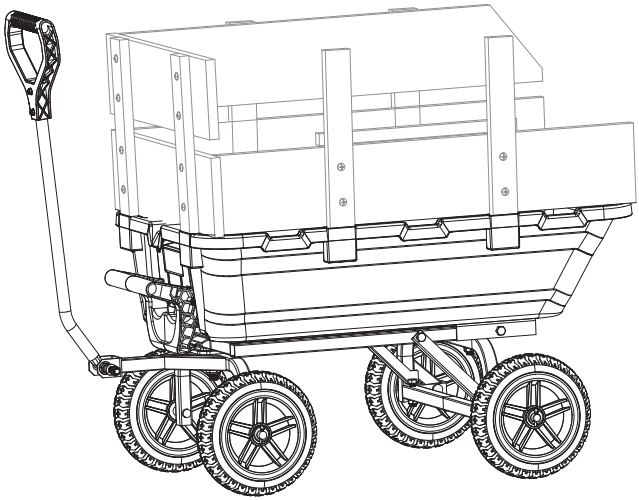

4. Ensure all screws are tightened, boards are level, and panels are stable.
5. Thoroughly sand all edges and corners to ensure a smooth, burr-free surface and prevent injury risks.

Operation Instructions

Loading Operation

1. When loading, please distribute weight evenly and avoid concentrating items on one side to improve the stability.
2. If the load exceeds the height of the cart body, use the provided cart net (V) to cover the load and secure its four corner hooks to the upper frame of the cart body to prevent the load from shifting or falling during transport.

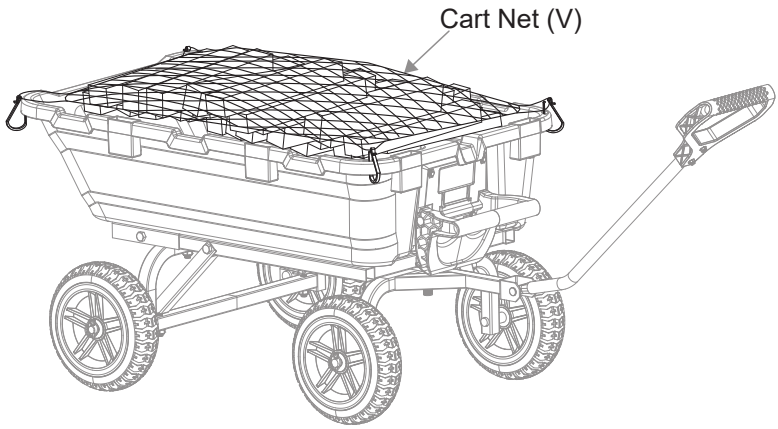

Dumping Operation

1. As shown in the figures, apply lateral force toward the cart body to release the latch, then lift the dumping latch up.

   Note: Applying upward force may prevent the dumping latch from releasing.

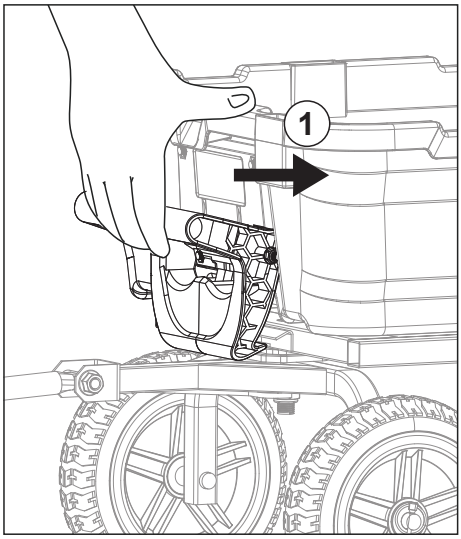

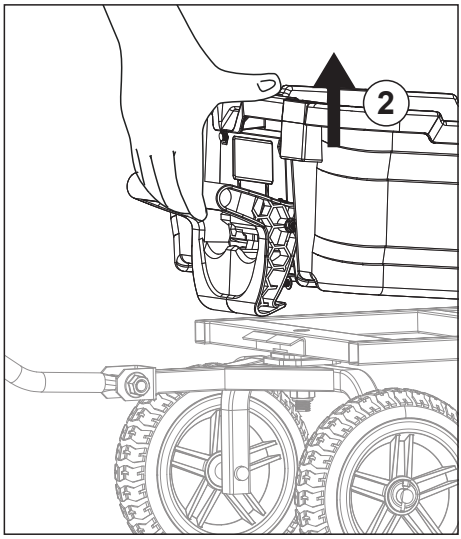

2. After releasing the latch, maintain a steady grip and slowly raise the cart body to the 90-degree maximum dump angle in a controlled motion to dump.

   Note: The edge of the cart body will contact the ground when tilted vertically to achieve more thorough unloading. Do not move the cart during this process to prevent wear on the cart body.

3. After dumping, grip the dumping latch to return to horizontal position, then apply downward pressure until an audible click confirms full engagement.

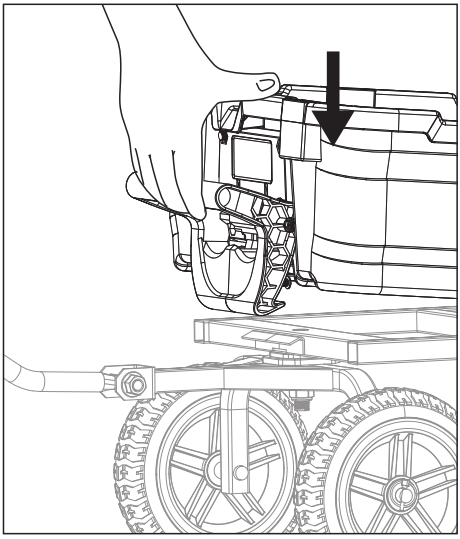

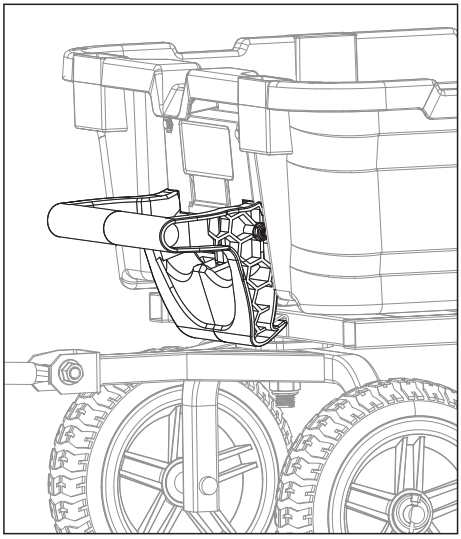

Pulling Operation

1. Pull the cart forward by holding the handle. Avoid pushing backward to prevent loss of directional control.
2. When pulling the handle, you can rotate the handle left or right with a maximum 270° turning angle for precise directional control.

Troubleshooting

Problem		Possible Causes	Solutions
No. 1	Steering stiff / unresponsive	1. The nut on the fixed bolt of the bottom frame is over-tightened.	Adjust the tightness of the nut as shown in **Fig.1**
		2. The bearing is lack of lubrication.	Apply lubricant / grease to the bearing
No. 2	Dump Mechanism cannot work	1. The dumping latch is not released.	As shown in **Fig.2**, apply lateral force toward the cart body to release the latch, then lift the dumping latch up to dump.
		2. The bolts shown in **Fig.3** are over-tightened.	Adjust the tightness of the bolts as shown in **Fig.3**
No. 3	Cart body or frame loose / wobbly	The bolts of the frame are loose.	Tighten all bolts except those at three locations in **Fig.4**
No. 4	Wheels jamming / detachment	1. The wheels / axles are stuck by leaves or twigs.	Clear debris and check axle clearance
		2. Round lynch pins are installed in incorrect orientation.	Realign the pin of the round lynch pin as shown in **Fig.5**
		3. The wheel is cracked or deformed.	Replace the deformed wheel

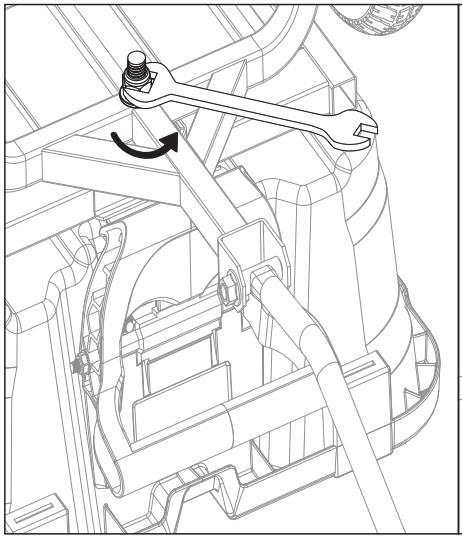

Fig.1

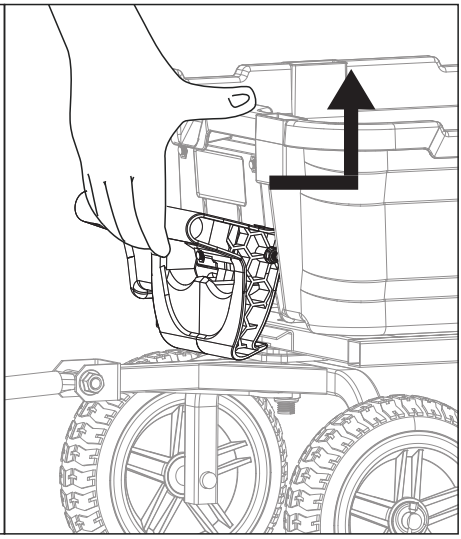

Fig.2

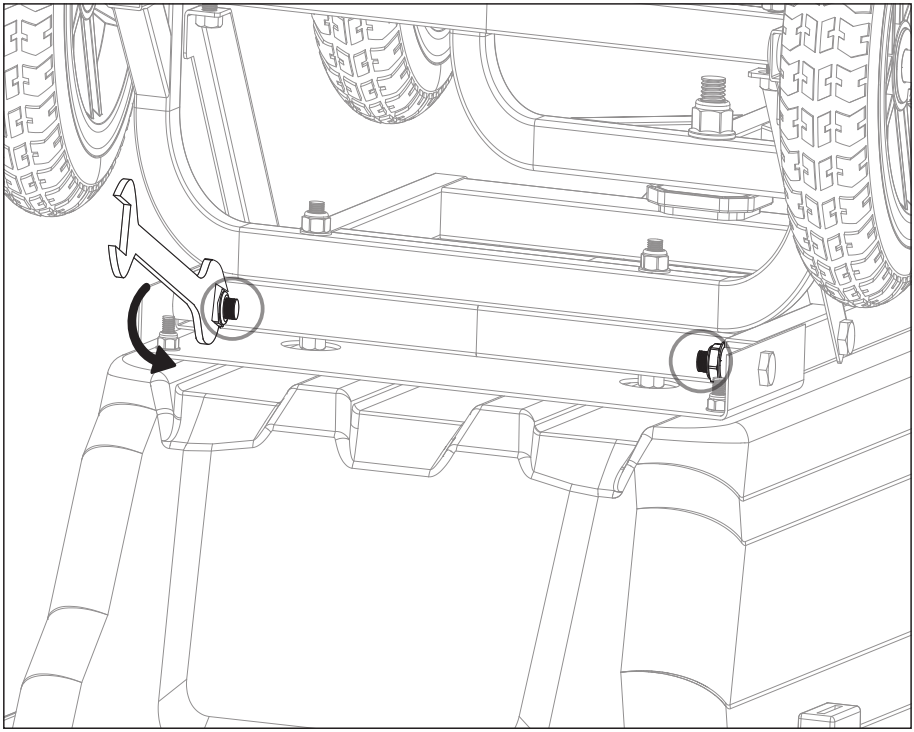

Fig.3

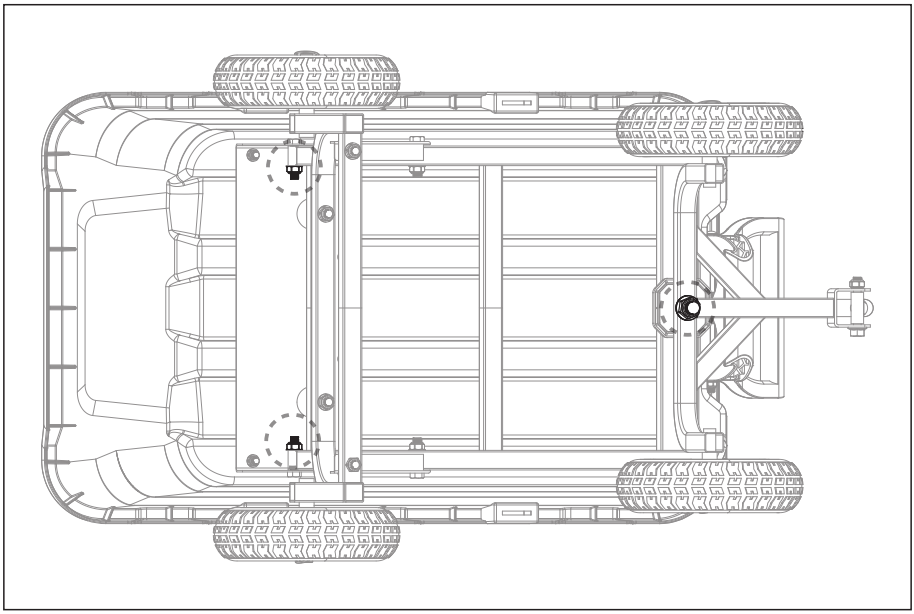

Fig.4

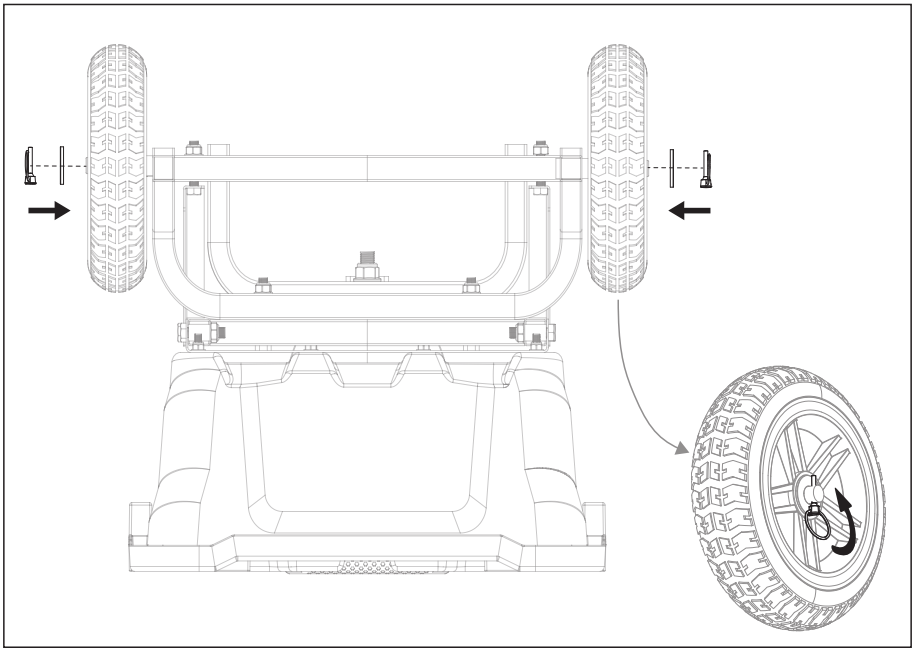

Fig.5

Return/Damage Claim Instructions

We kindly ask that you email us directly from the marketplace where your food carrier was purchased, along with the attached images and a description of your claim. This ensures we can assist you promptly.

If You Need to Return or Replace the Item

When you initiate a return or replace, please provide us with the genuine reason for your return in the comments section. This feedback is invaluable to us as it helps us continually improve our products and services. To ensure a smooth return or replace process, please retain the original packaging and include all components. Returns lacking the original packaging may be subject to refusal.

If You Need to Replace Parts

To ensure that we provide you with the correct replacement parts, please take clear photos of the parts that need to be replaced and the text markings on the box. This step is essential for our team to accurately identify your product number and the specific parts you require.

If You Received a Defective Item

Please take a clear photo of the damaged part and the text markings on the box. These photos will help us assess the situation and provide you with the best possible solution. If you need to return or replace the item, please retain the original packaging and include all components. Returns lacking the original packaging may be subject to refusal.

Manufacturer: Shenzhen Cammoo Trade Co,. Ltd.

Add: Fortune Building 39H-W2, 88 Fuhua 3rd Road, Gangxia Community, Futian Street, Futian District, Shenzhen City, Guangdong, China, 518000.

MADE IN CHINA