ASSEMBLY GUIDE
4-DOOR WARDROBE

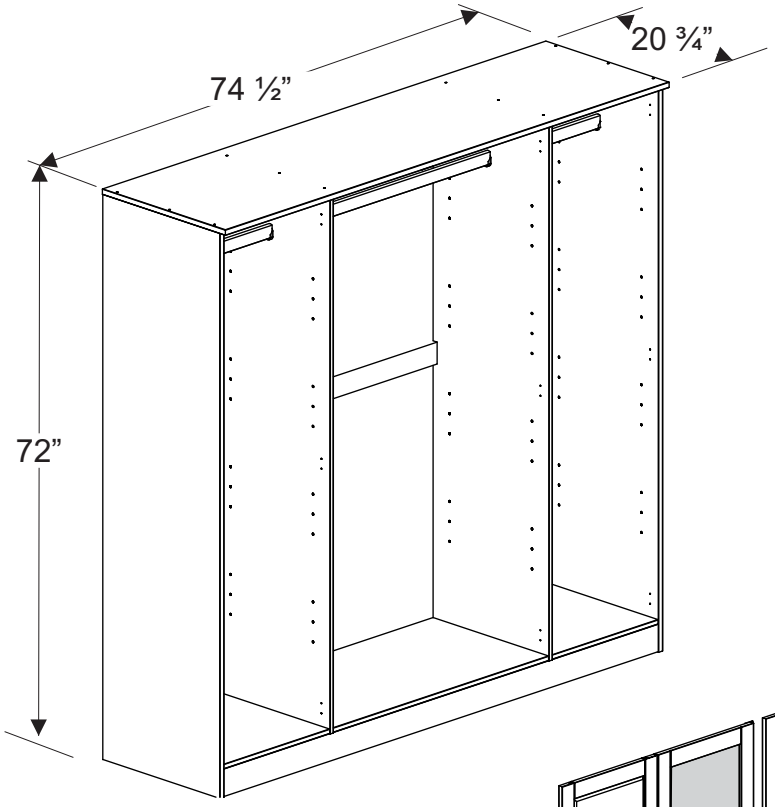

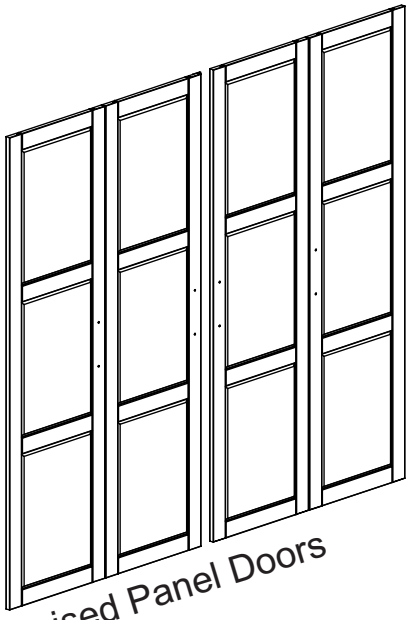

Raised Panel Doors

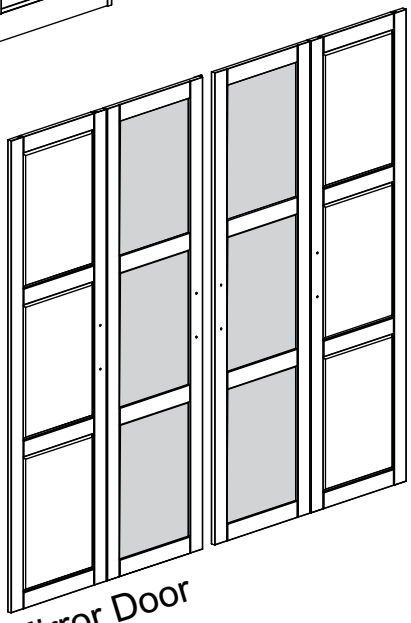

Mirror Door

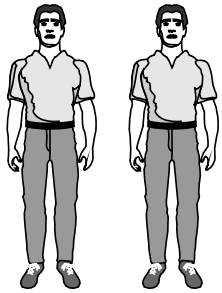

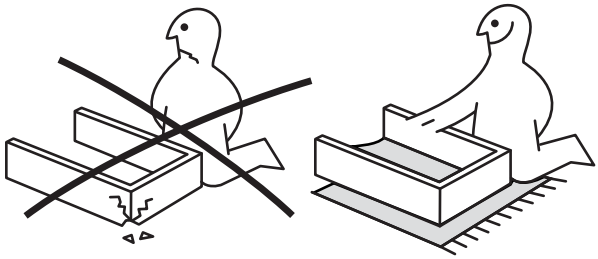

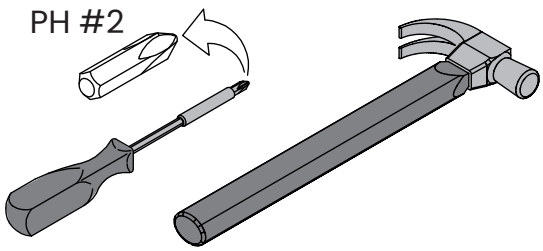

REV - 03/2023

PRE-ASSEMBLY PREPARATION

- Please check the contents before assembling. A full checklist of parts is provided below.
- If any parts are missing or damaged, please contact us
- Assemble on a flat, smooth surface on top of a blanket.
- Use only low-speed power drill setting.
- Assemble as near as possible to the point of use.
- The hardware pack contains SMALL ITEMS which should be KEPT AWAY FROM YOUNG CHILDREN.

PARTS DIAGRAM

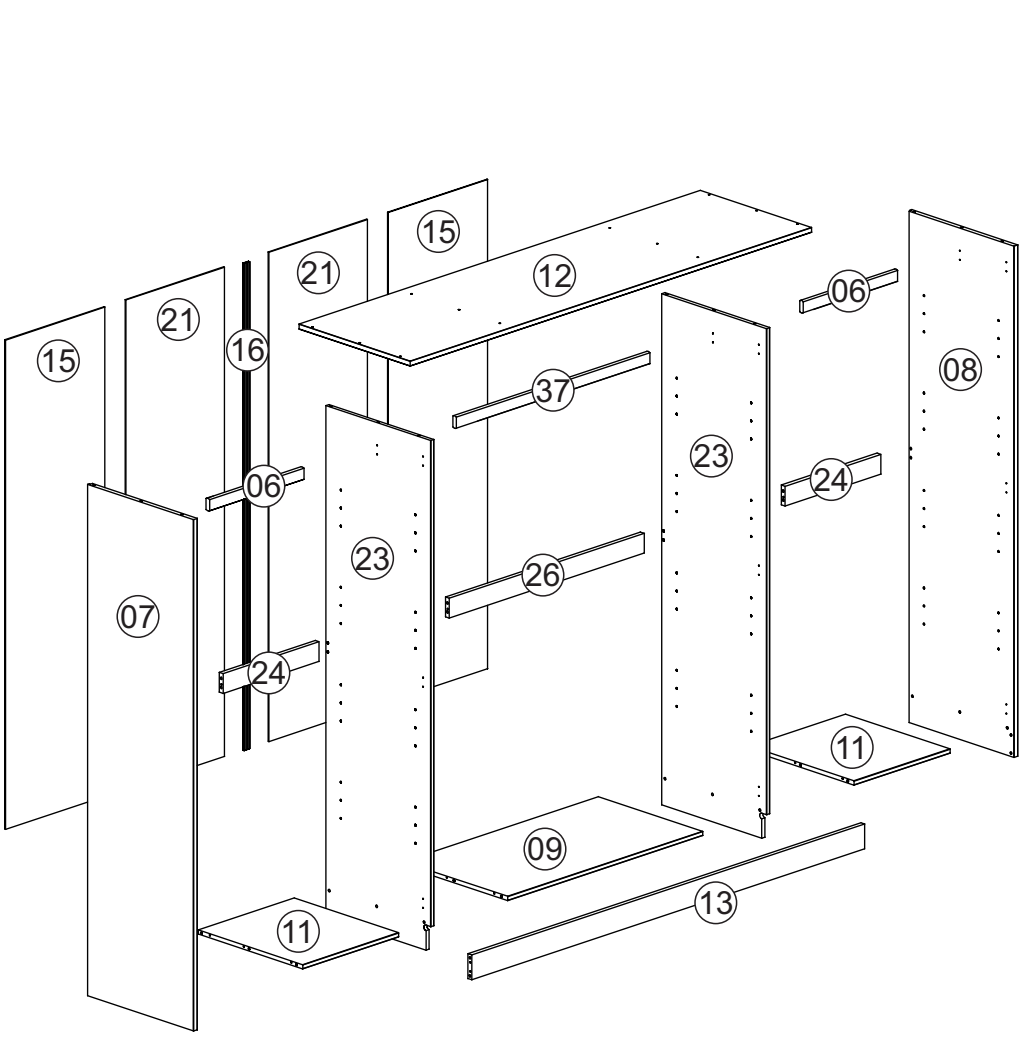

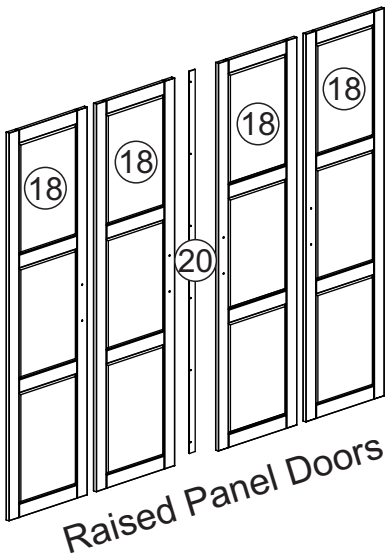

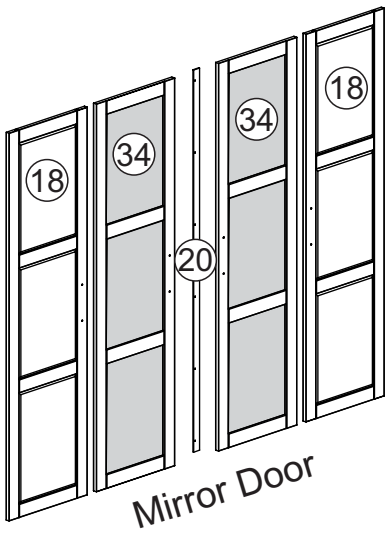

Made in Brazil

SCREWS ARE SHOWN IN ACTUAL SIZE

A1	 4,0x30	28+2
A16	 4,0x40	12+1
A25	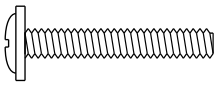 M4x25	08+1
A42	 4,0x14	12+1
A44	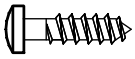 3,5x14	68+3
C2	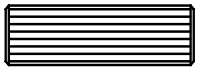 8,0x25	46+3
D3	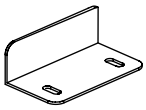	01
D10	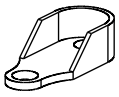	06
D16	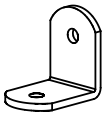	02
D27	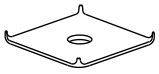	10+1
F10	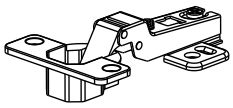	12
G1	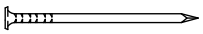 10x10	70
H12	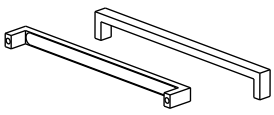	04

FURNITURE ANTI-TIP KIT		
A8	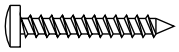 3,0x20	02+1
F8	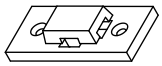	02
F9		01

WARNING:
CHOKING HAZARD
Small Parts.
Adult Supervision Required.
Not for children under 3 years old.

WARNING:

FURNITURE TIPOVER CAN RESULT IN SERIOUS INJURY OR DEATH

This wardrobe includes tipover-prevention hardware that MUST BE ATTACHED TO THE WALL per the assembly instructions.

01)

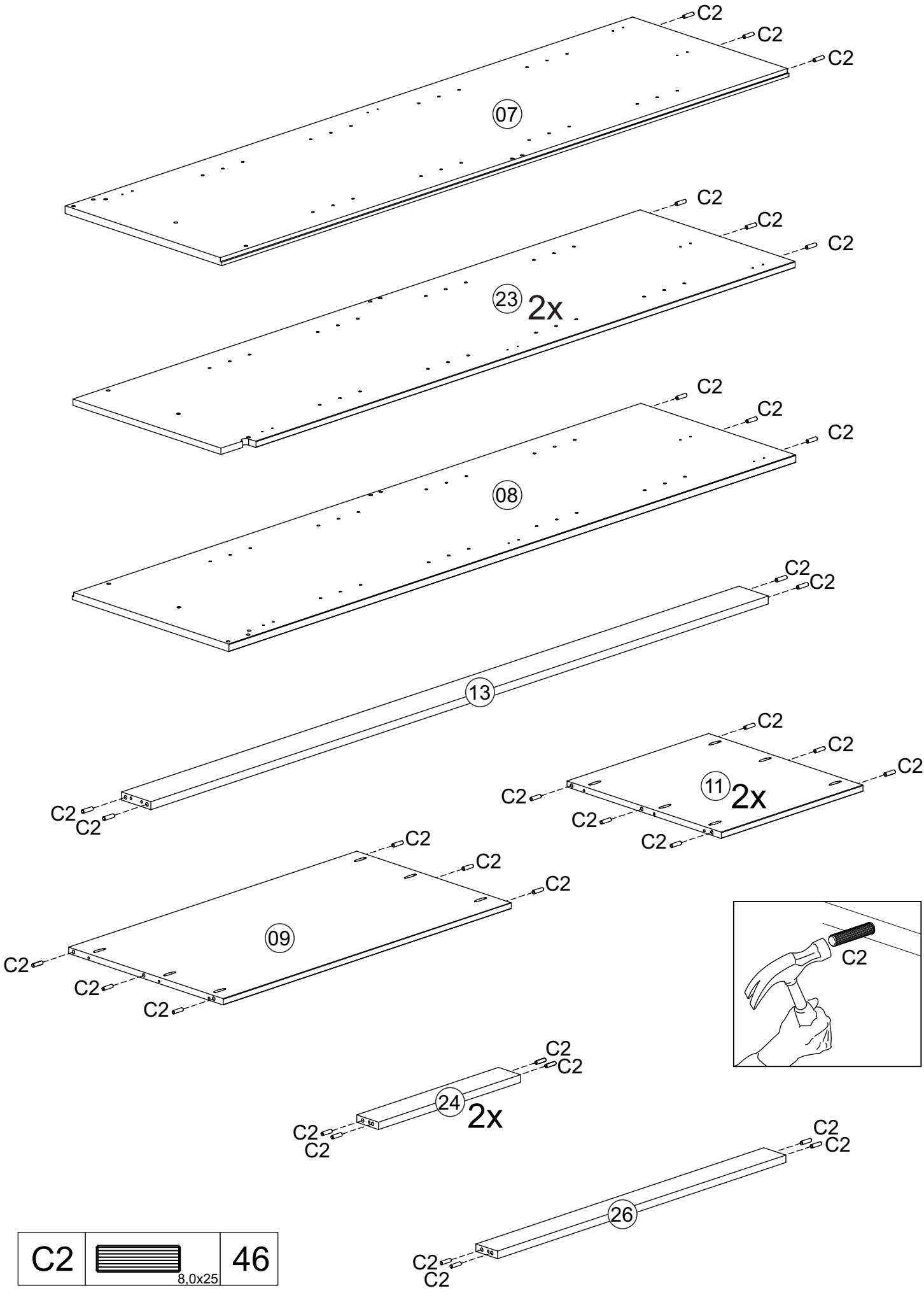

C2	8,0x25	46

02)

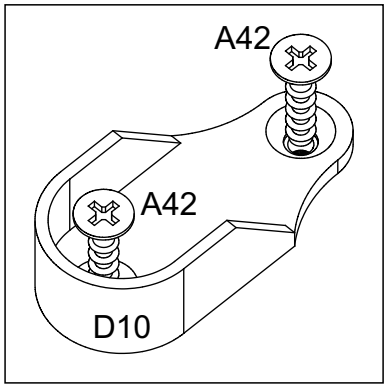

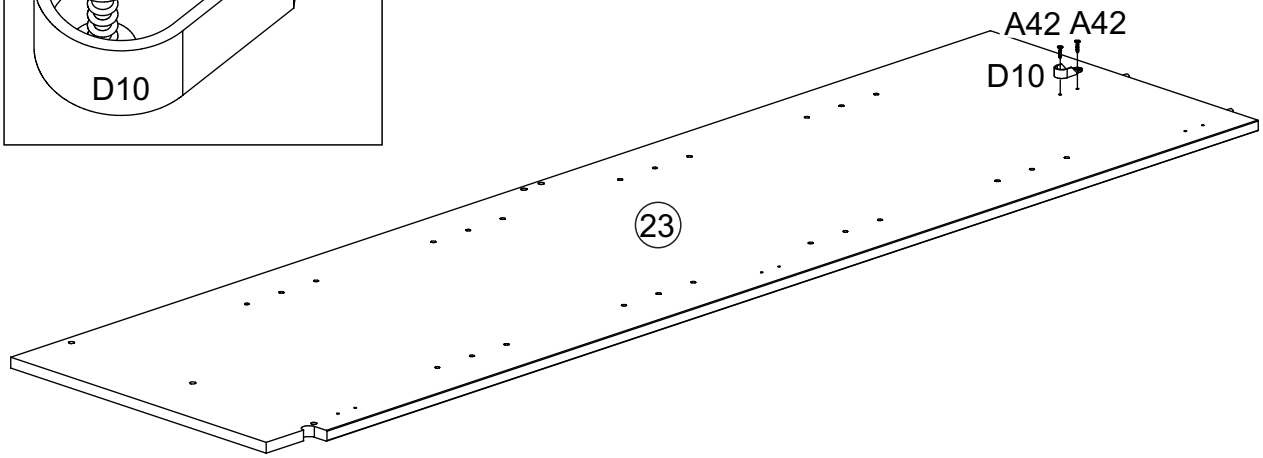

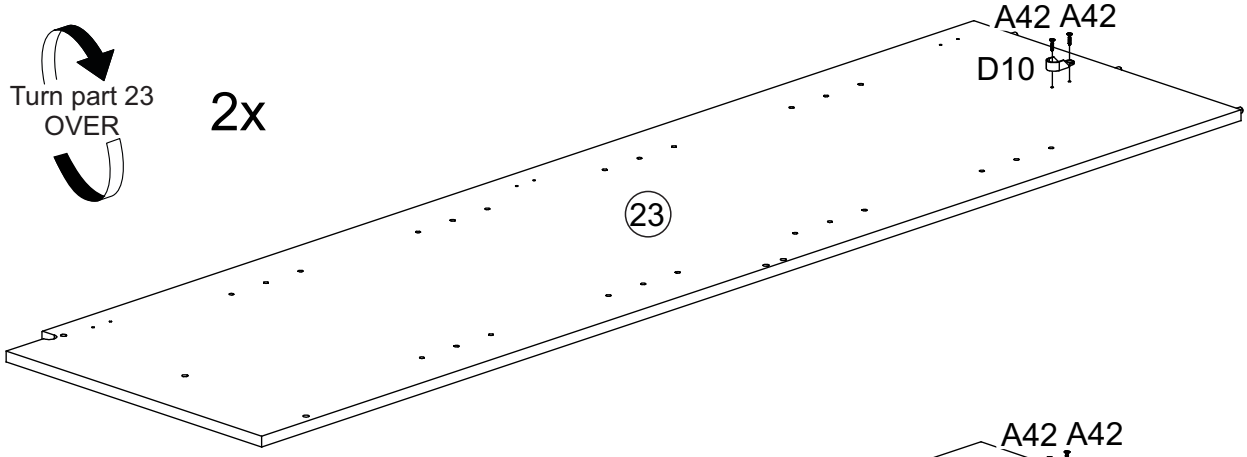

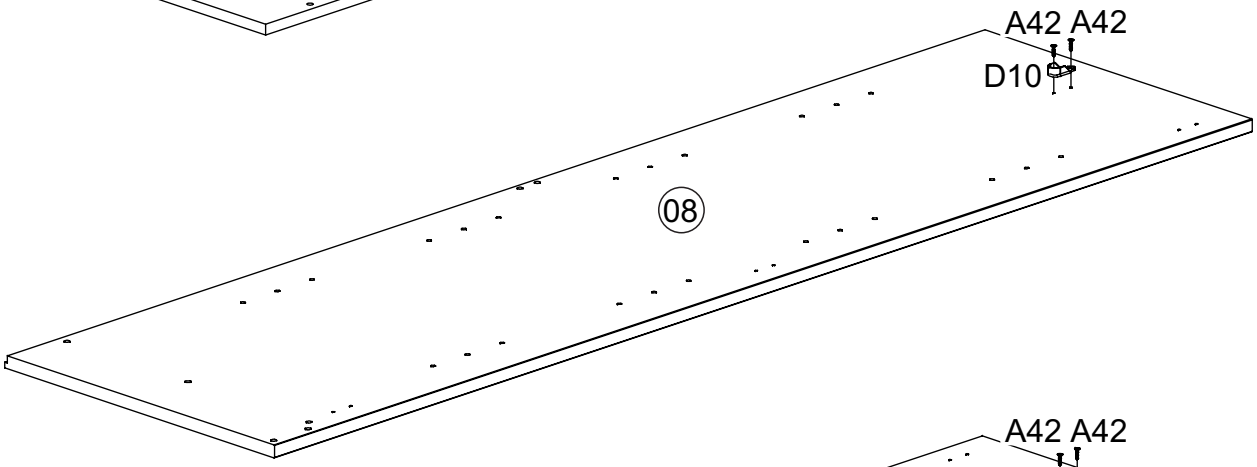

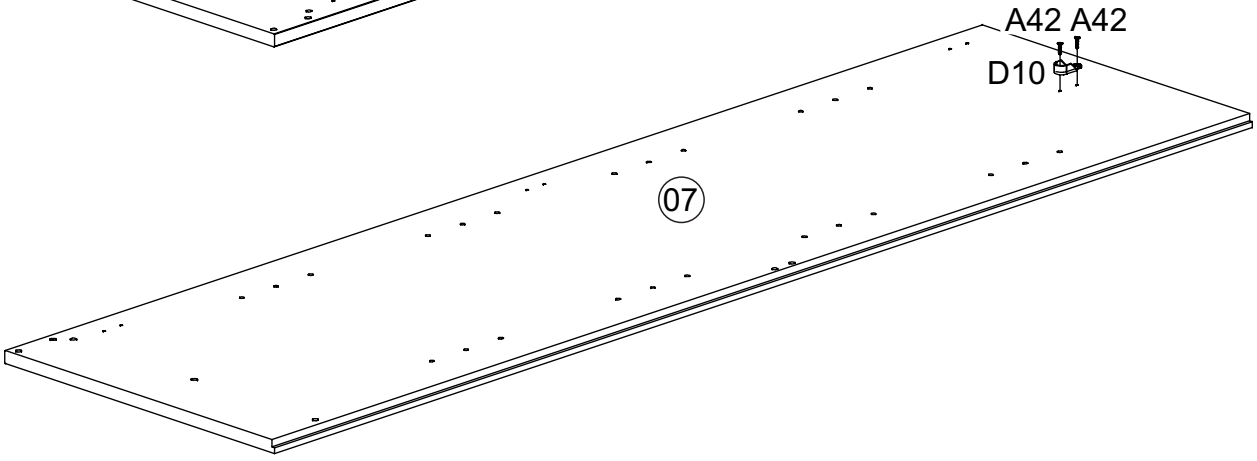

A42	4,0x14	12
D10		06

03)

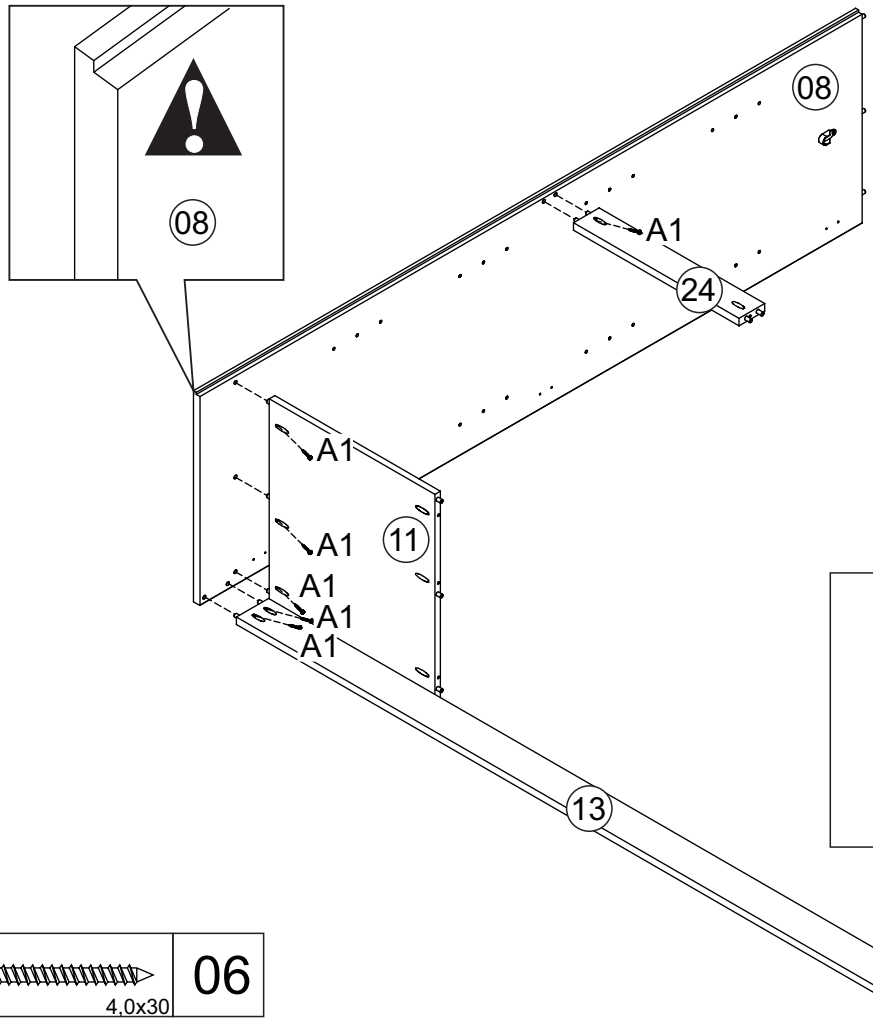

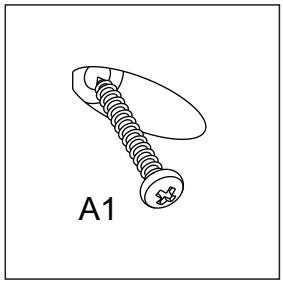

A1	4,0x30	06

04)

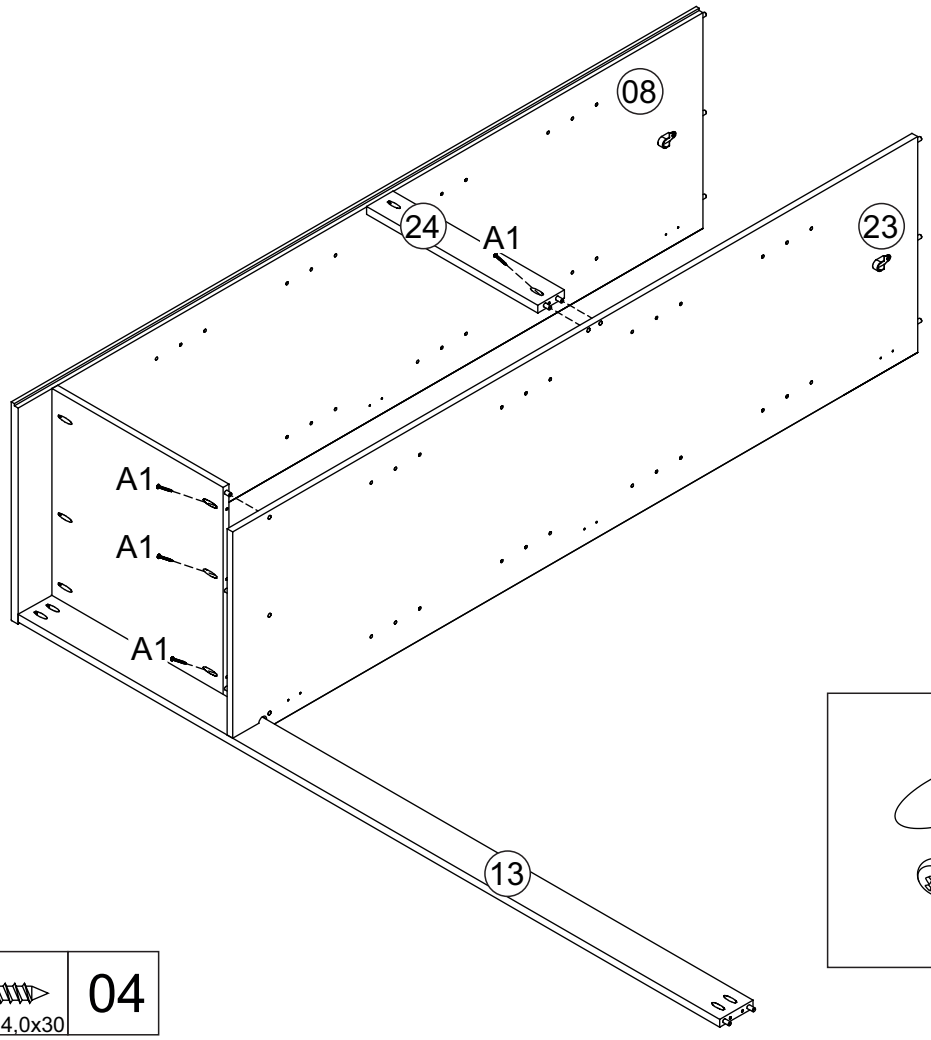

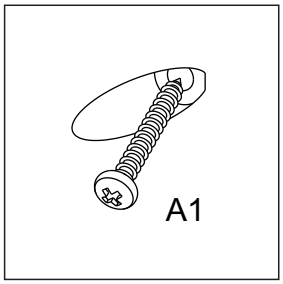

A1	4,0x30	04

05)

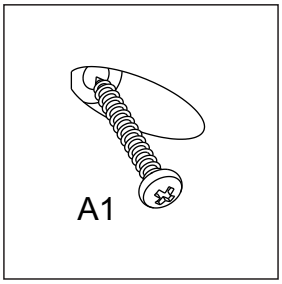

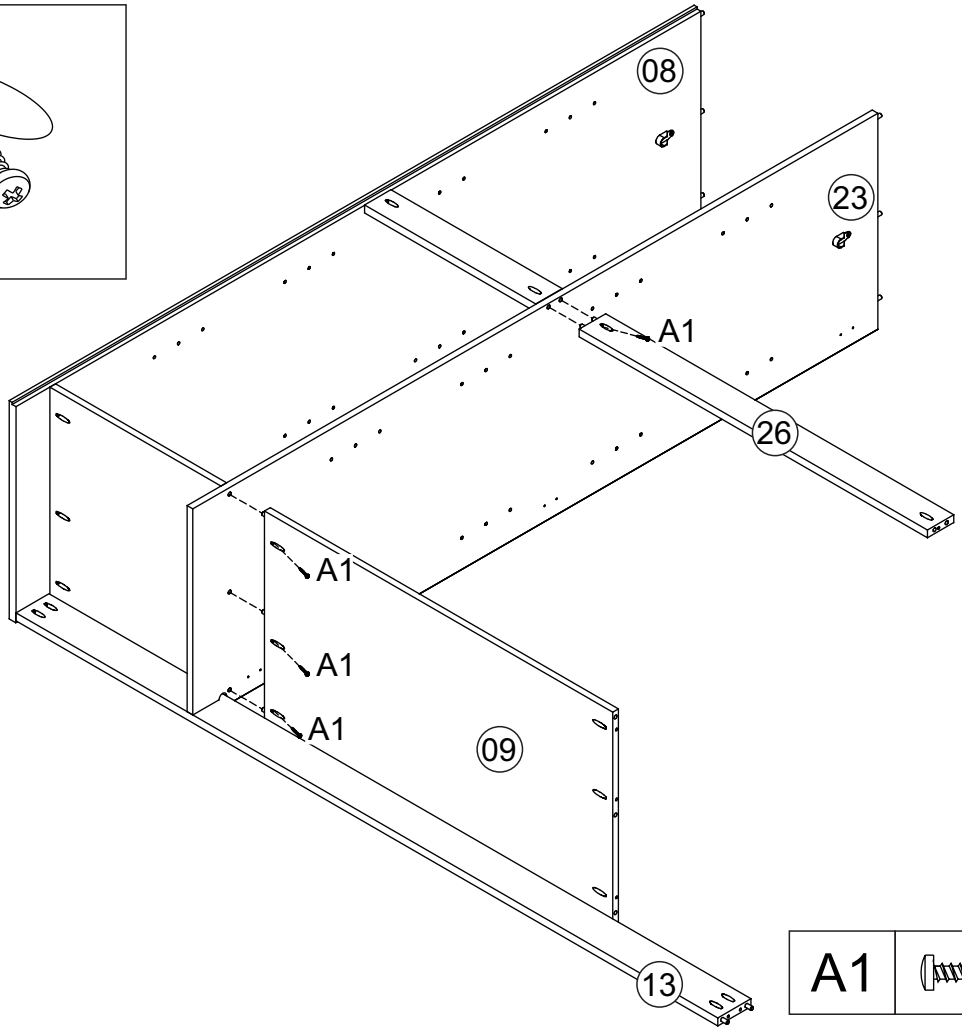

A1	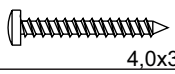 4,0x30	04

06)

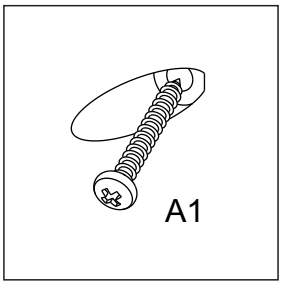

A1	4,0x30	04

07)

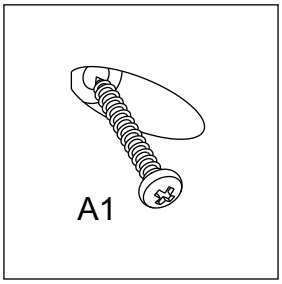

A1	4,0x30	04

08)

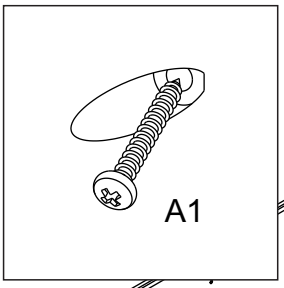

A1	4,0x30	06

09)

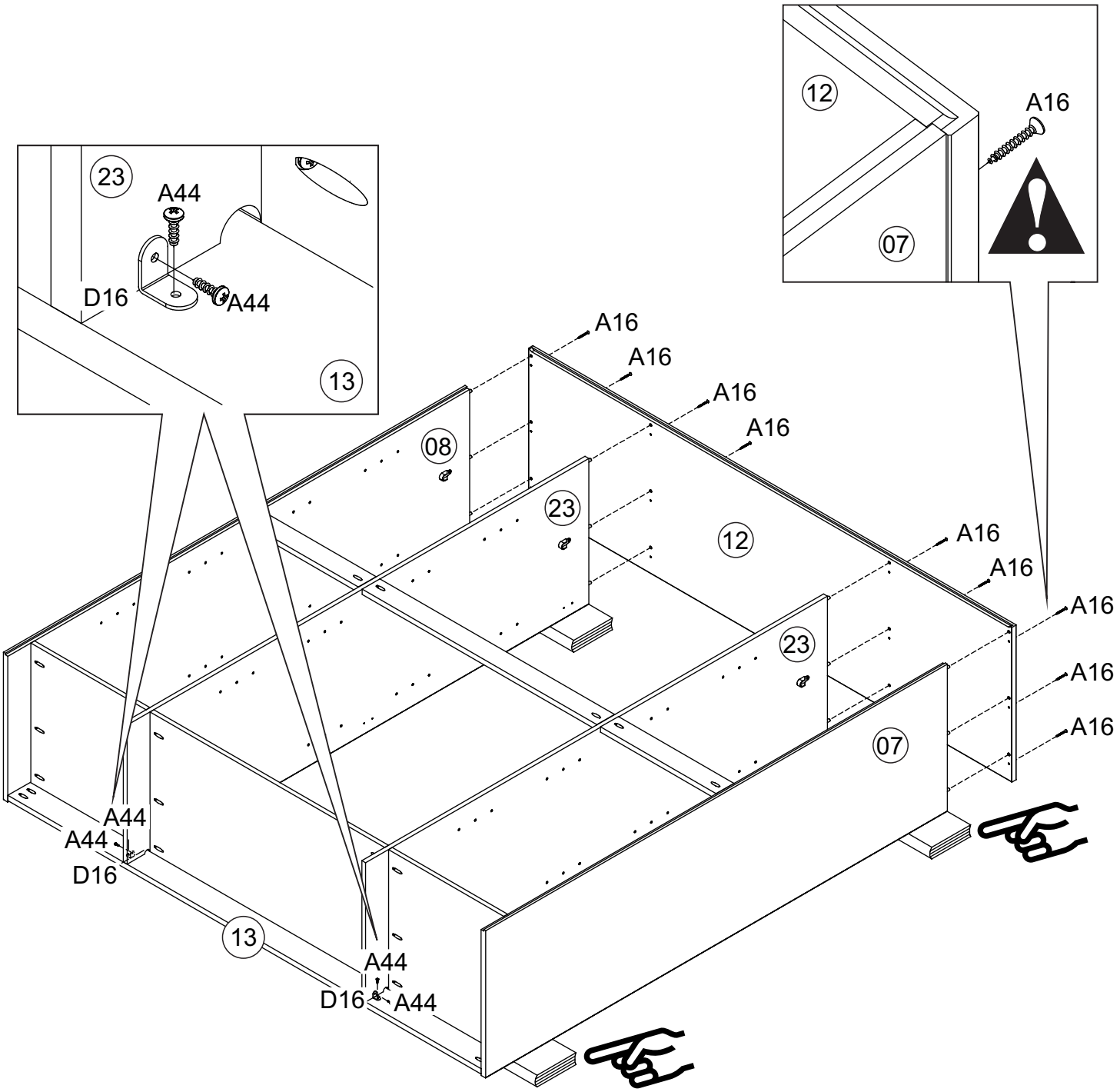

A16	4,0x40	12
A44	3,5x14	04
D16		02

10)

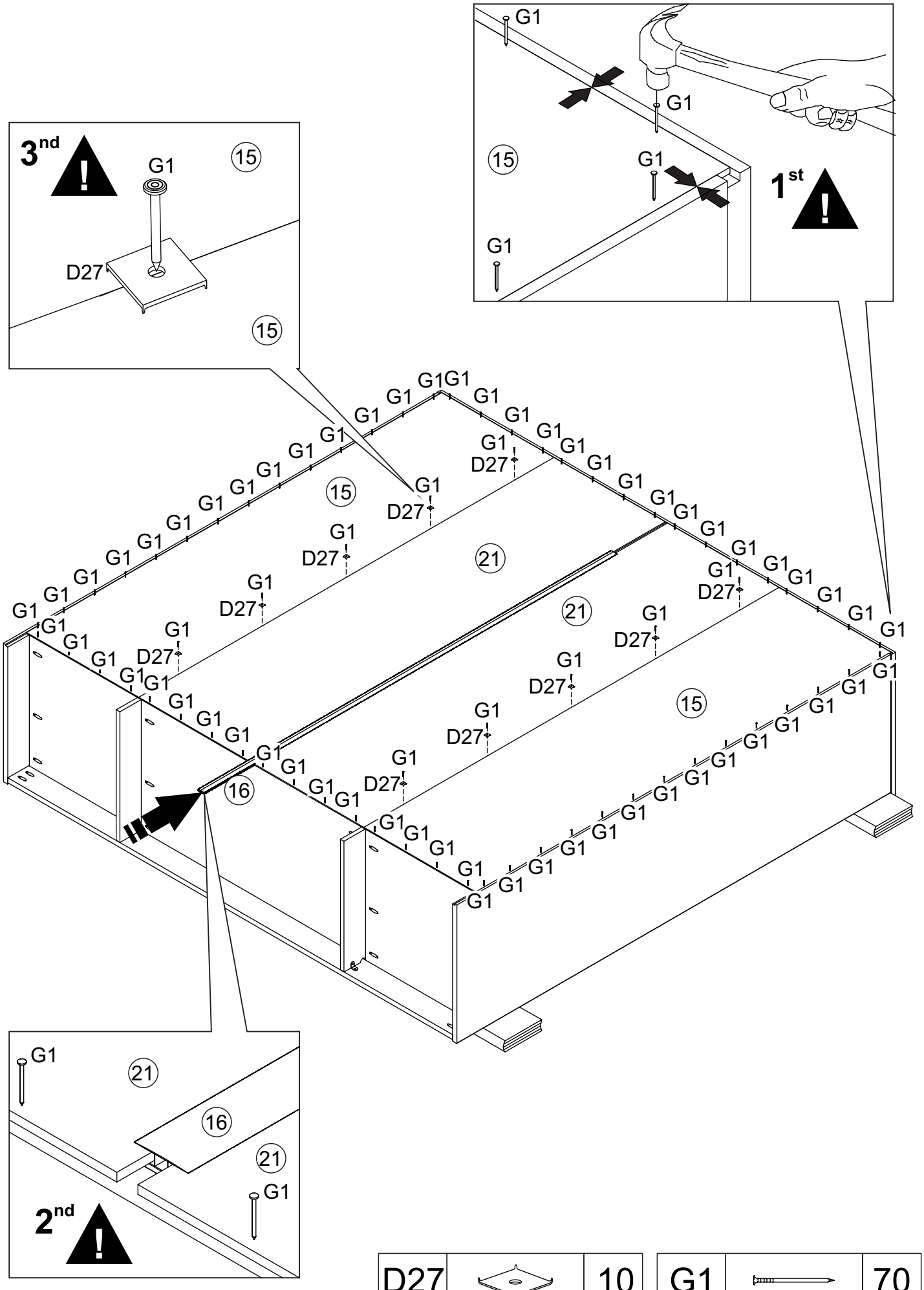

D27		10

G1	10x10	70

11)

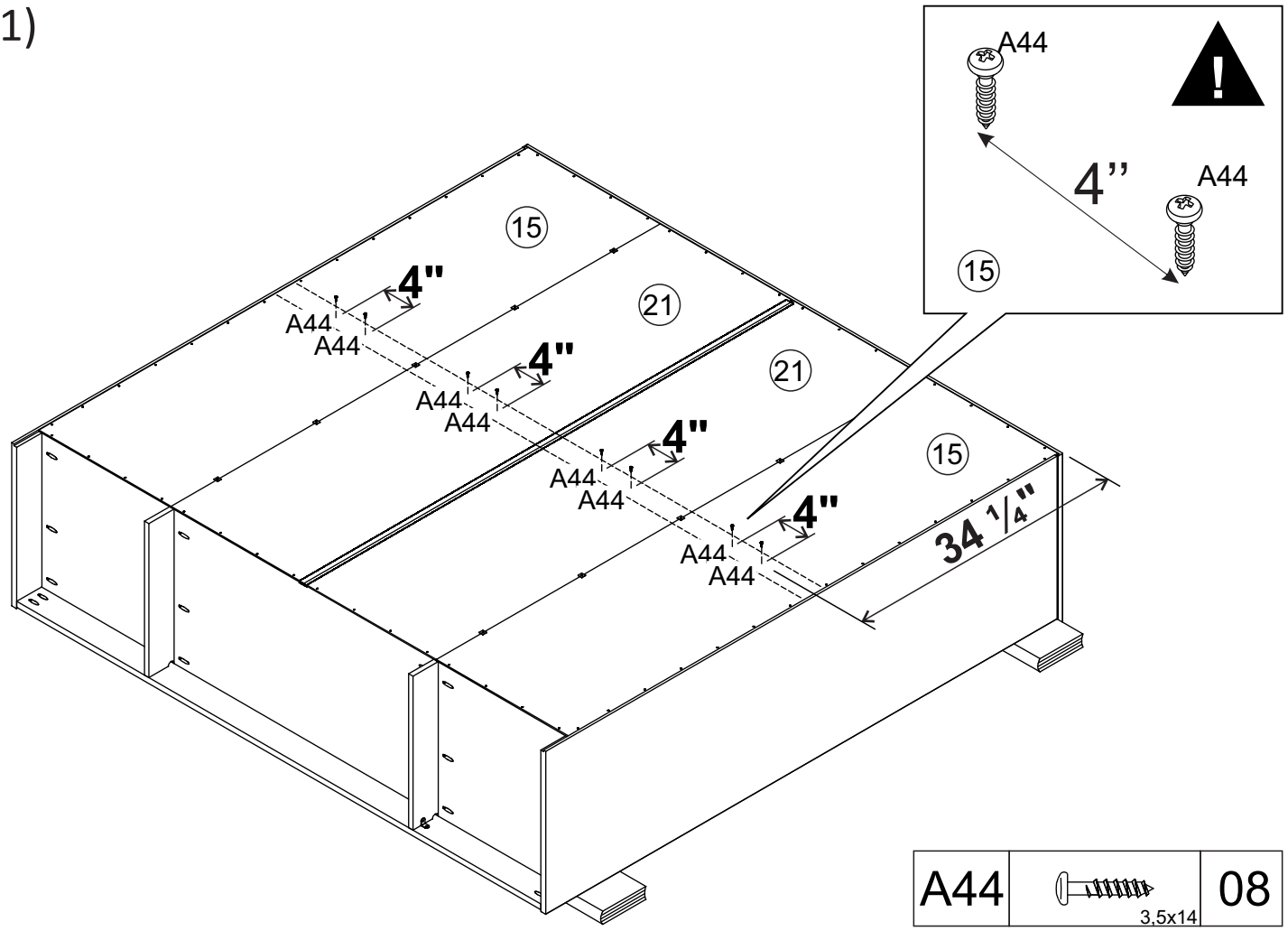

A44	3,5x14	08

12)

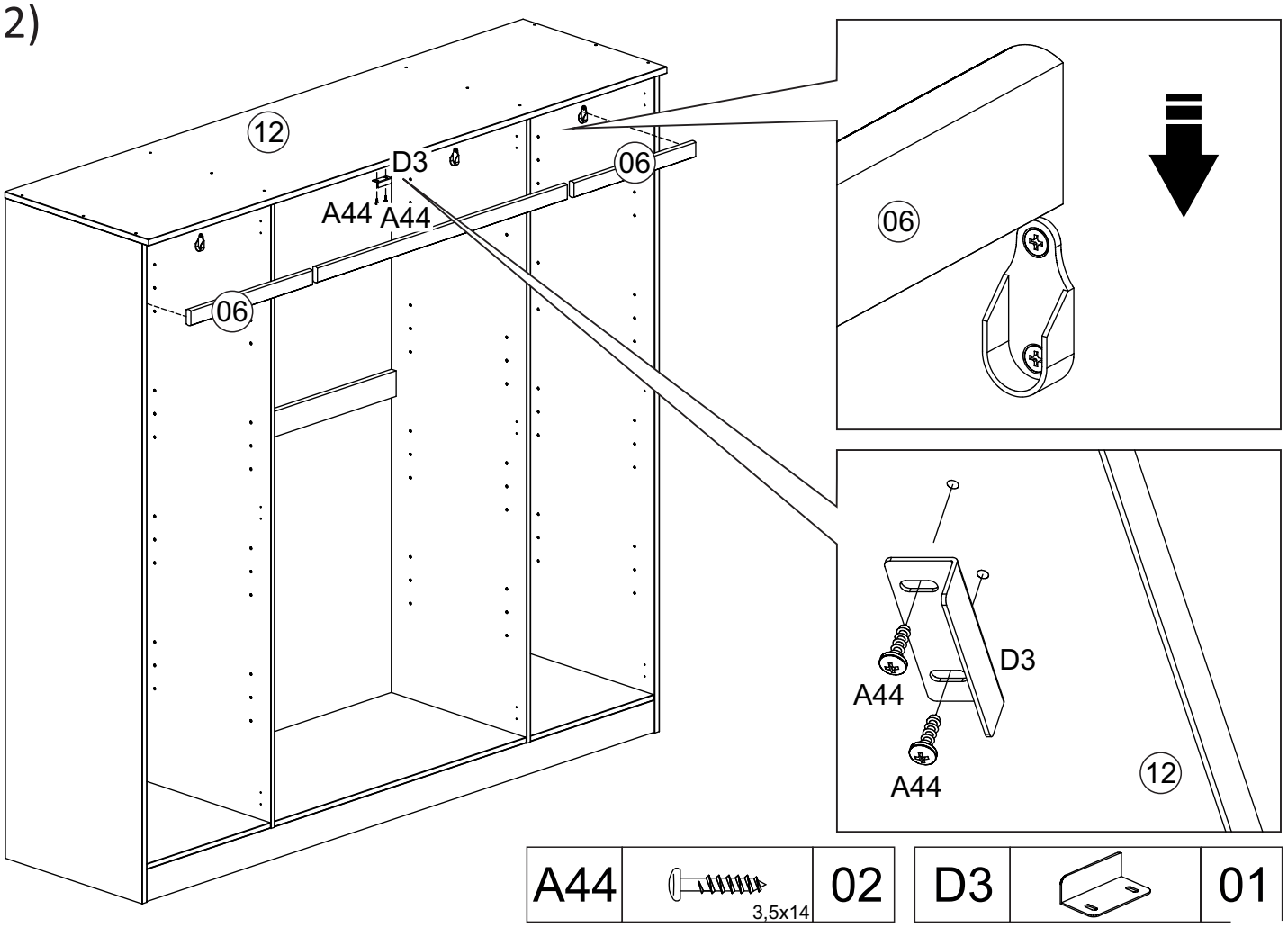

A44	3,5x14	02

D3		01

13)

Attach hinge (F10) to hinge plate if it comes separated.

Push hinge against plate until it clicks.

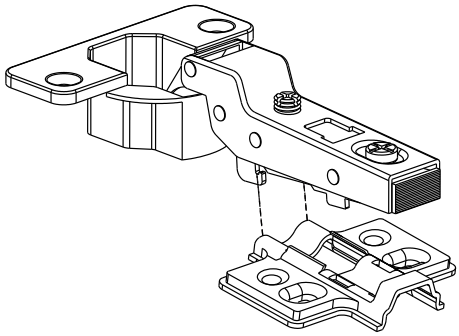

F10

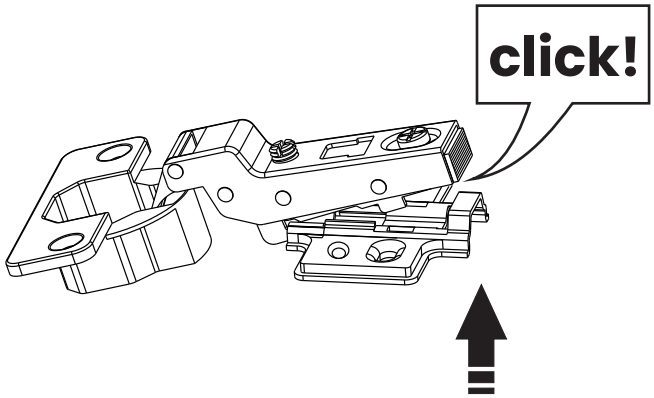

14)

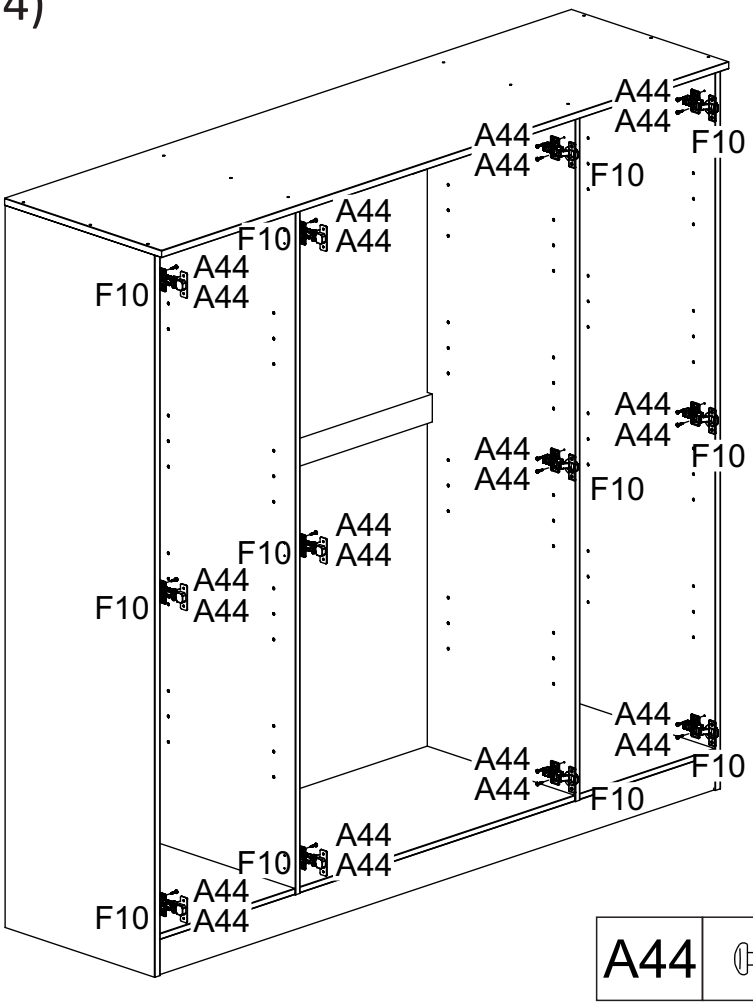

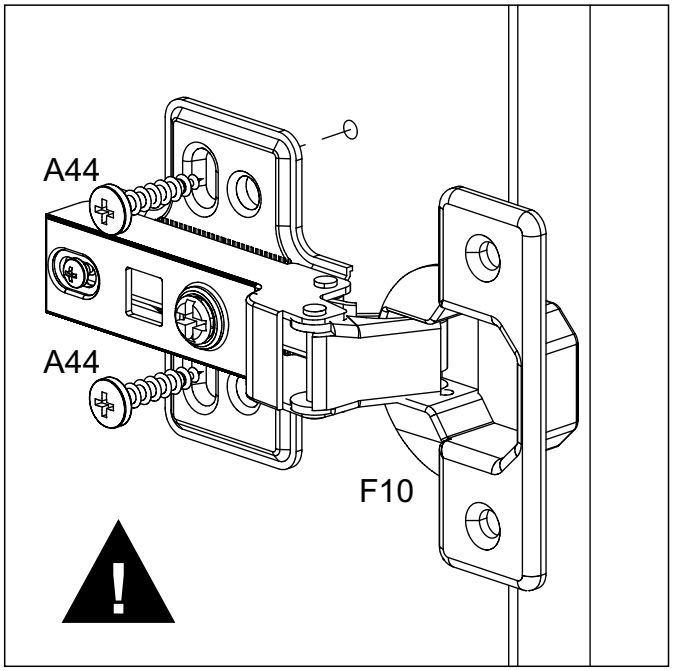

A44	3,5x14	24
F10		12

15)

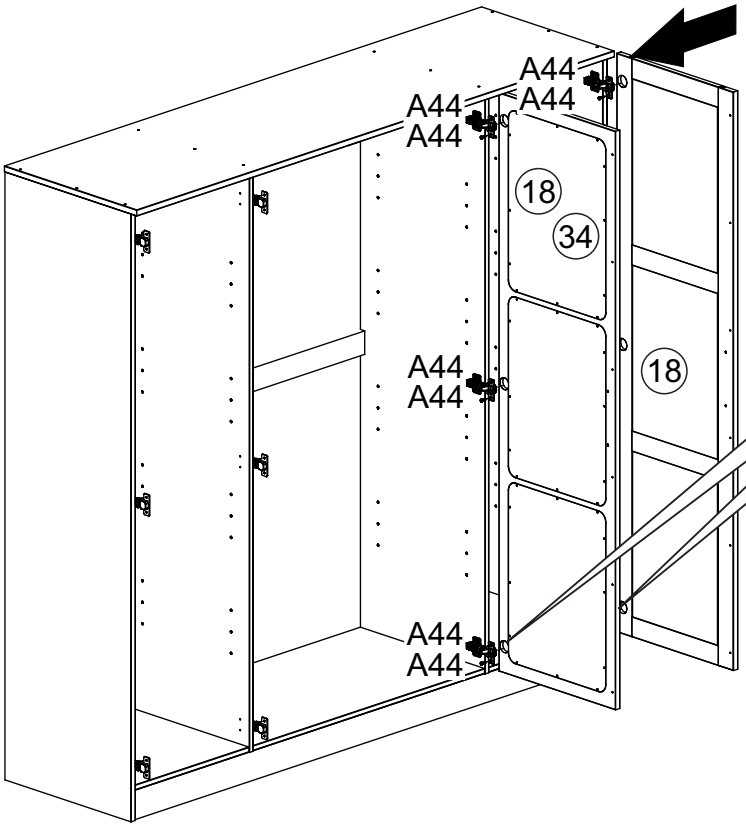

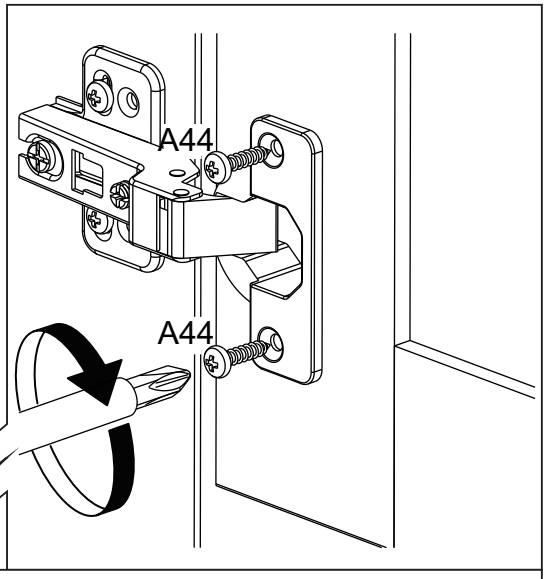

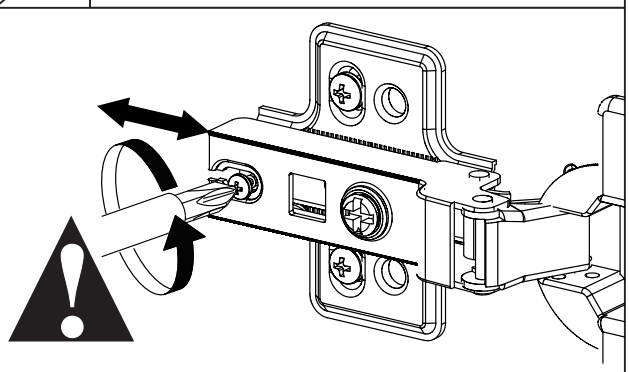

It might be necessary to adjust the hinges (F10) before hanging the doors.

A44	3,5x14	12

16)

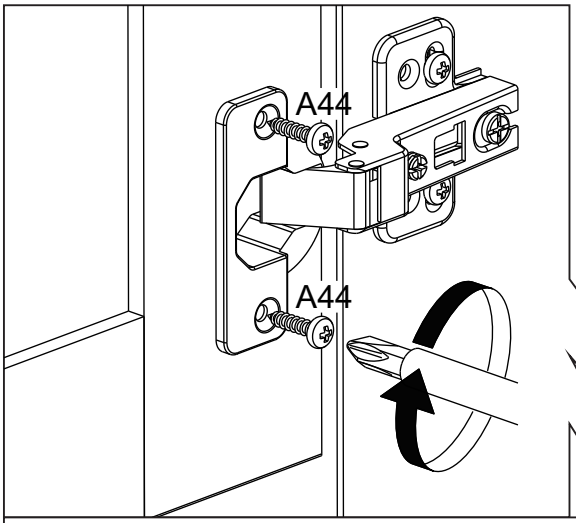

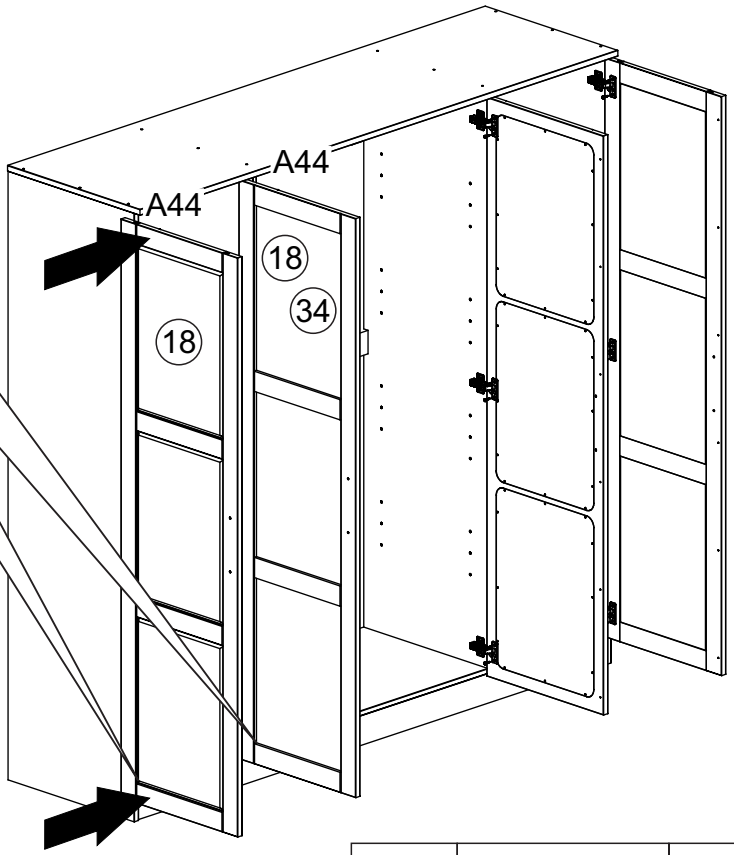

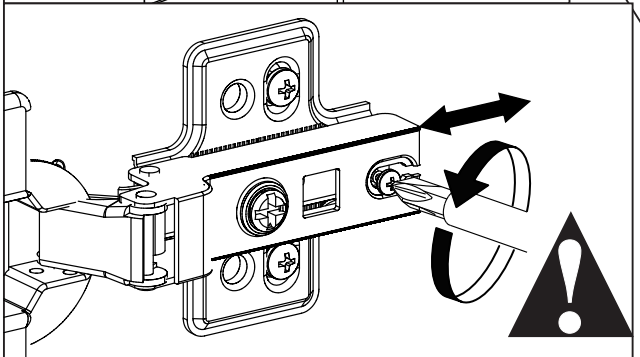

It might be necessary to adjust the hinges (F10) before hanging the doors.

A44	3,5x14	12

17)

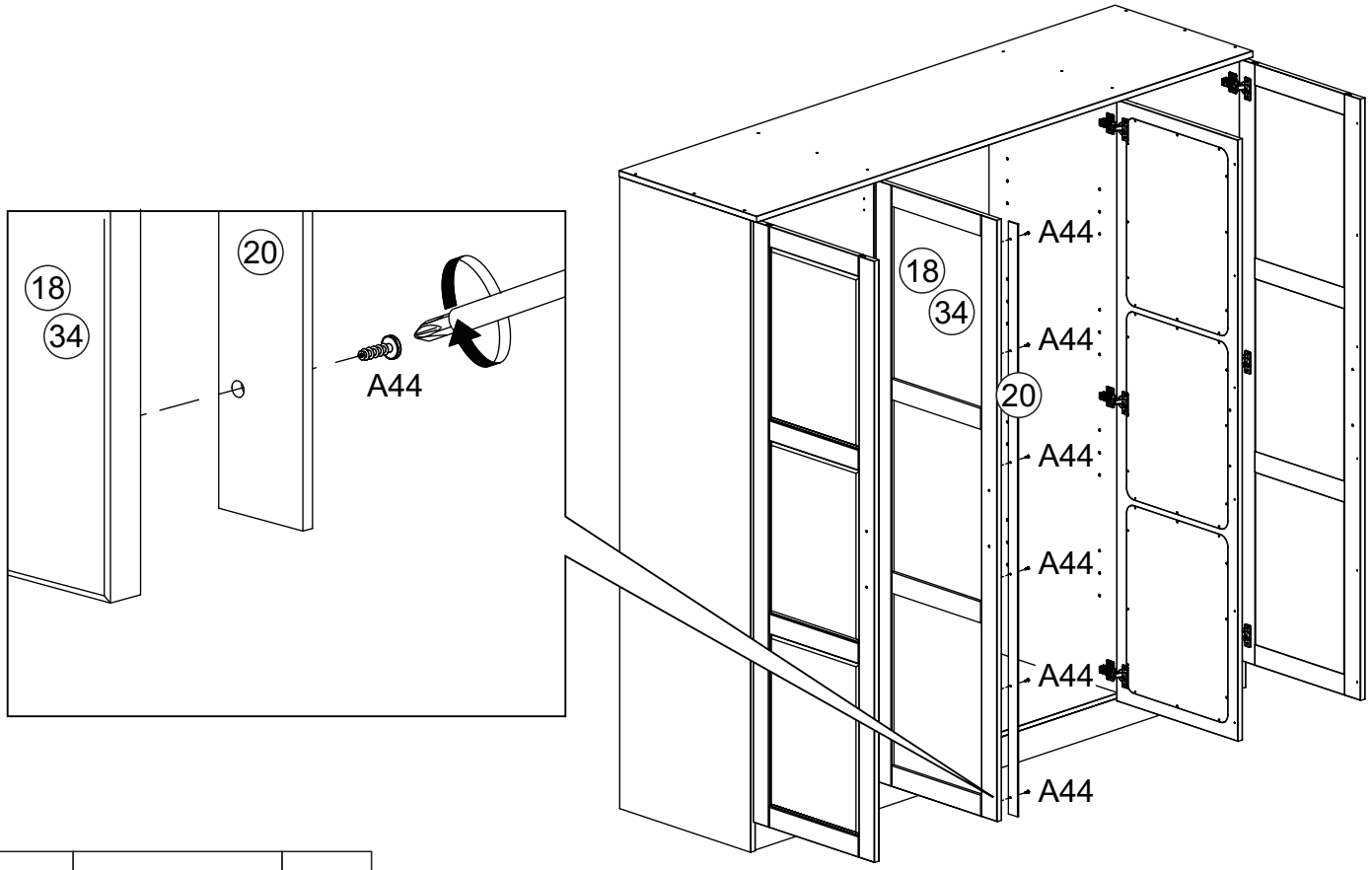

A44	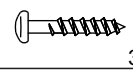 3,5x14	06

18)

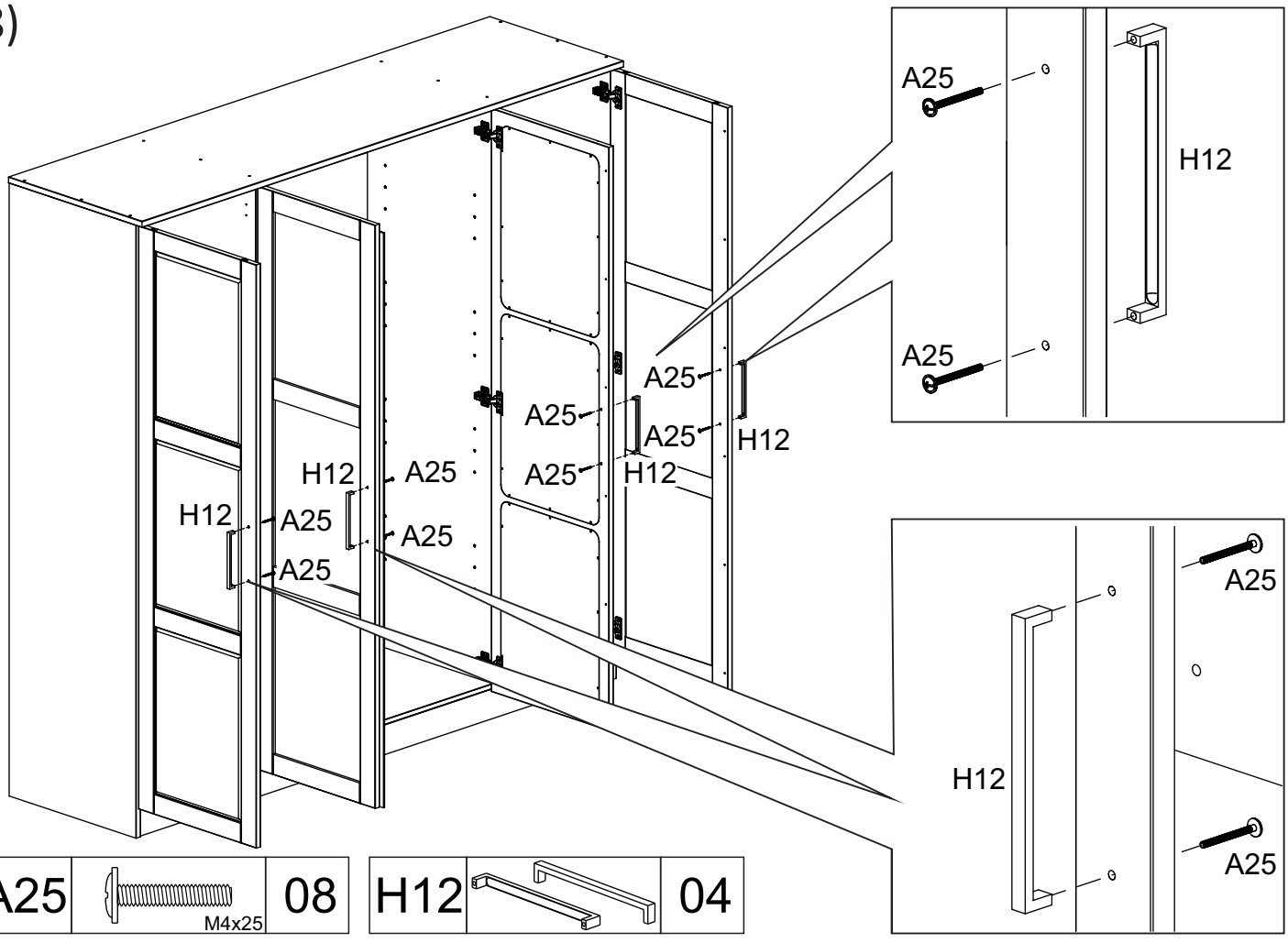

A25	M4x25	08

H12		04

19) HINGE ADJUSTMENT GUIDE.

