Assembly instructions

SAFETY WARNING

1. Follow the information on the warnings appearing on the upper bunk bed end structure and on the carton. Do not remove waming label from bed.
2.Always use the recommended size mattresses or mattress supports, or both, to help prevent the likelihood of entrapment or falls.
3.Do not allow children under 6 years of age to use the upper bunk.
4.Periodically check and ensure that the guardrail, ladder, and other components are in their proper position, free from damage, and that all connectors are tight.
5.Do not allow horseplay on or under the bed and prohibit jumping on the bed.
6.Always use the ladder for entering and leaving the upper bunk.
7.Do not use substitute part. Contact the manufacture or dealer for replacement part.
8.Use of a night light may provide added safety precaution for a child using the upper bunk.
9.Always use guardrails on both long sides of the upper bunk. If the bunk bed will be placed next to the wall, the guardrail that runs the full length of the bed should be placed against the wall to prevent entrapment between the bed and wall.
10.The use of water or sleep flotation mattresses is prohibited.
11.STRANGULATION HAZARD - Never attach or hang items to any part of the bunk bed that are not designed for use with the bed; for example, but not limited to, hook, belts and jump ropes.
12.Keep these instruction for future reference.
13.We recommend assembling your bunk bed on the shipping carton to protect your floor or carpet.
14.Be certain all staples are out of the box before beginning assembly on the shipping carton.
15.USE ONLY MATTRESSES WHICH ARE AS THE ABLE BELOW ON UPPER AND ON LOWER BUNKS.

Upper bed

Bed type	Length	Width	Thickness
FUII XL Standard	79" - 80"	53 ½"	6" max

Bottom bed

Bed type	Length	Width	Thickness
Queen Standard	79" - 80"	59 ½"	8" max

16.SURFACE OF MATTRESS MUST BE AT LEAST 5" (127MM) BELOW THE UPPER EDGE OF GUARDRAILS.

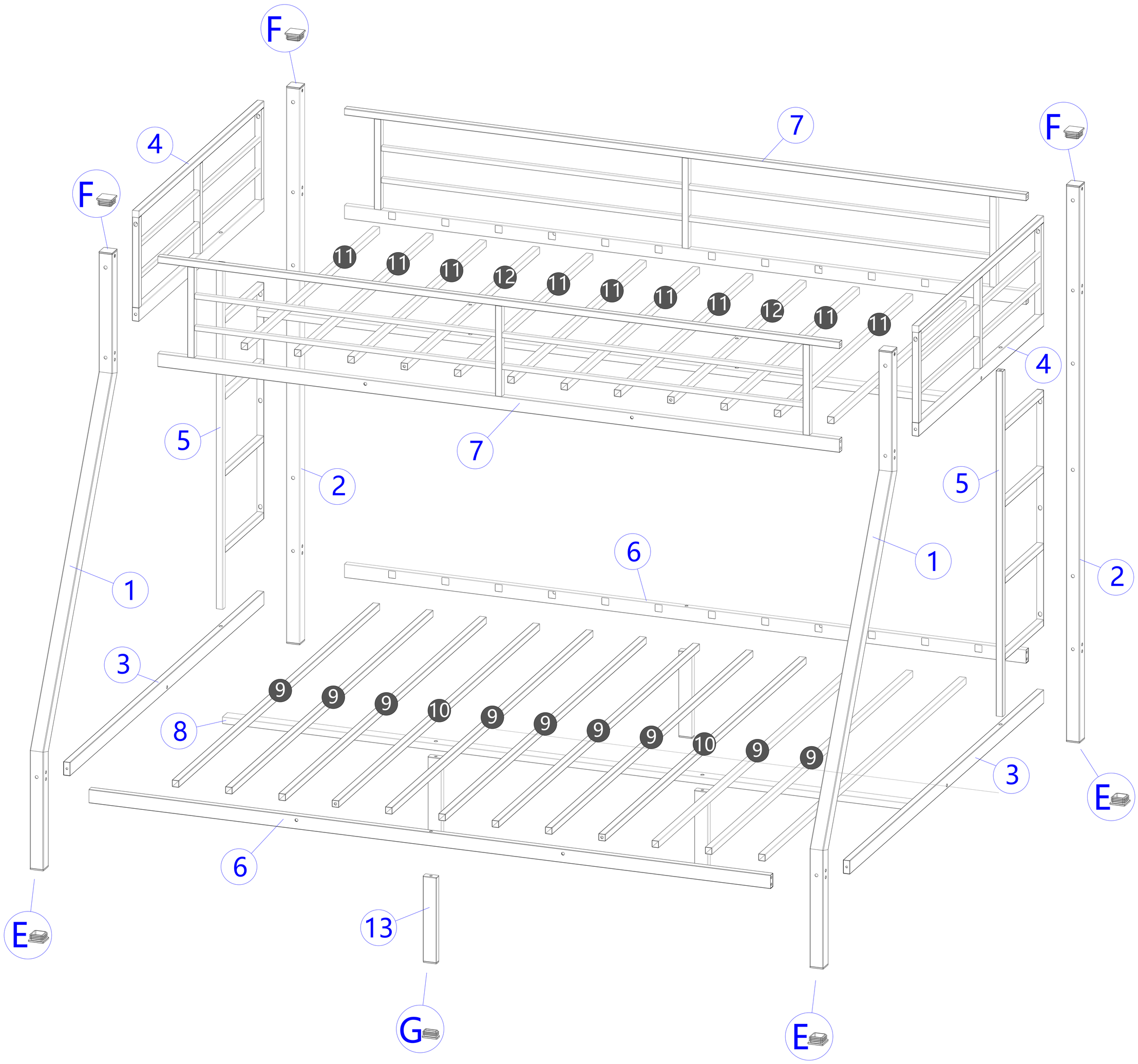

PARTLIST

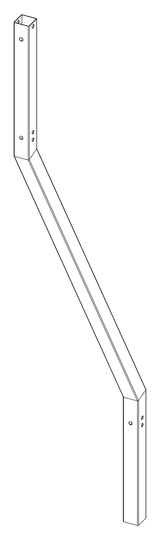	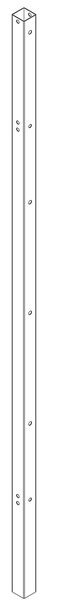	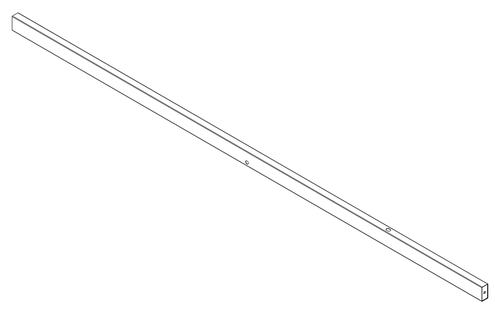	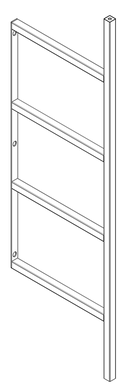	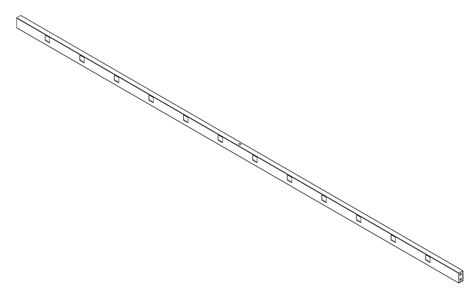
		3-2pcs		6-2pcs
		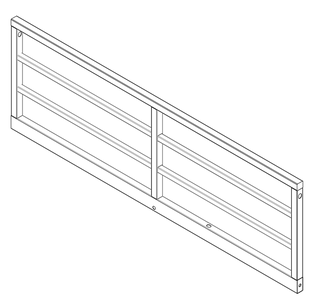		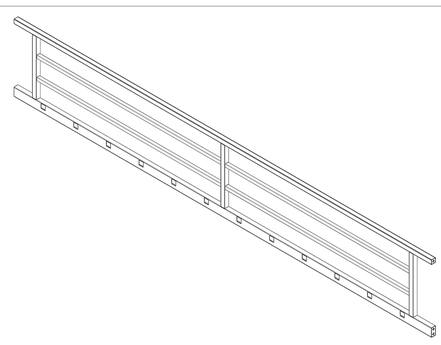
1-2pcs	2-2pcs	4-2pcs	5-2pcs	7-2pcs

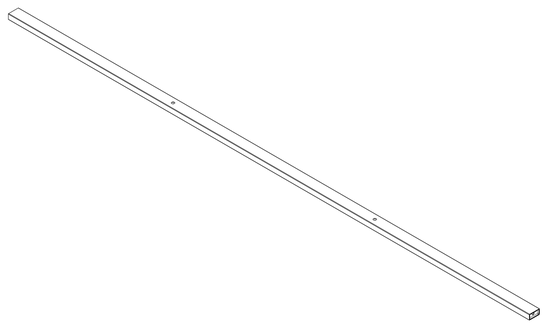	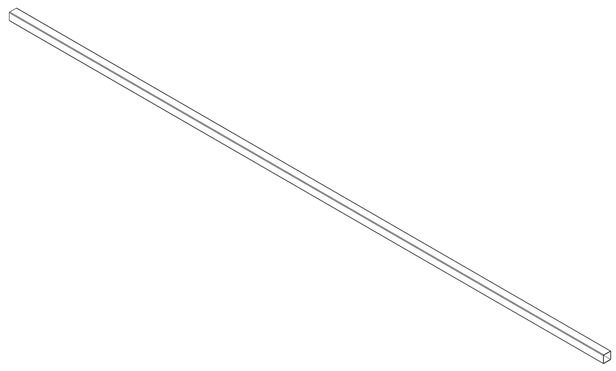	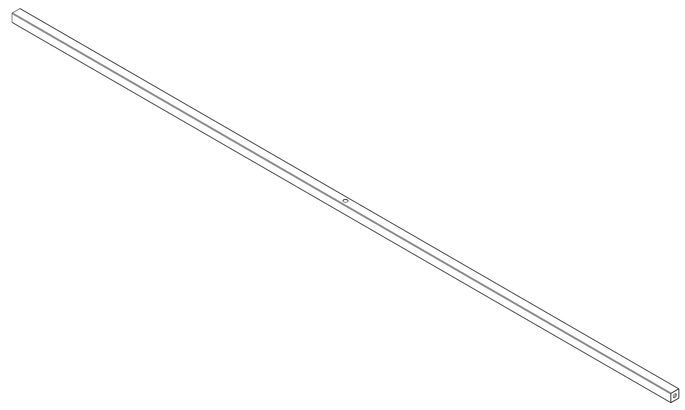
8-2pcs	9-10pcs	10-2pcs
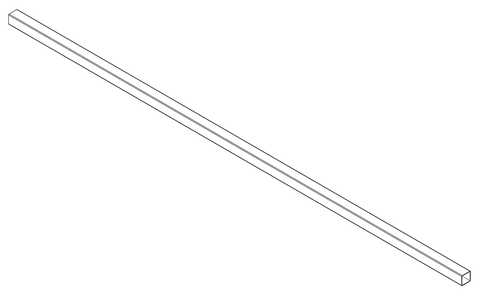	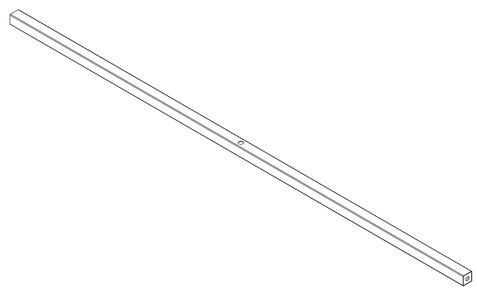	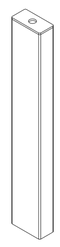
11-2pcs	12-2pcs	13-4pcs

HARDWARE LIST

	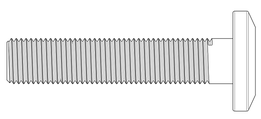	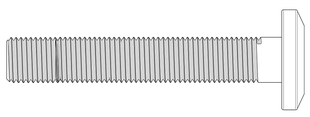	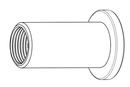	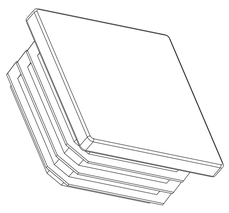	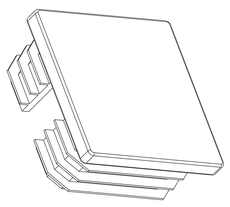	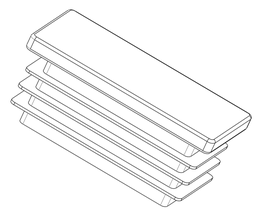
A	B	C	D	E	F	G Installed
2pcs	8*35-20pcs	8*55-42pcs	8*16-12pcs	4pcs	4pcs	4pcs

Step 1: Use hardware A, C, and connect #2, #7, #6 and #13 together.

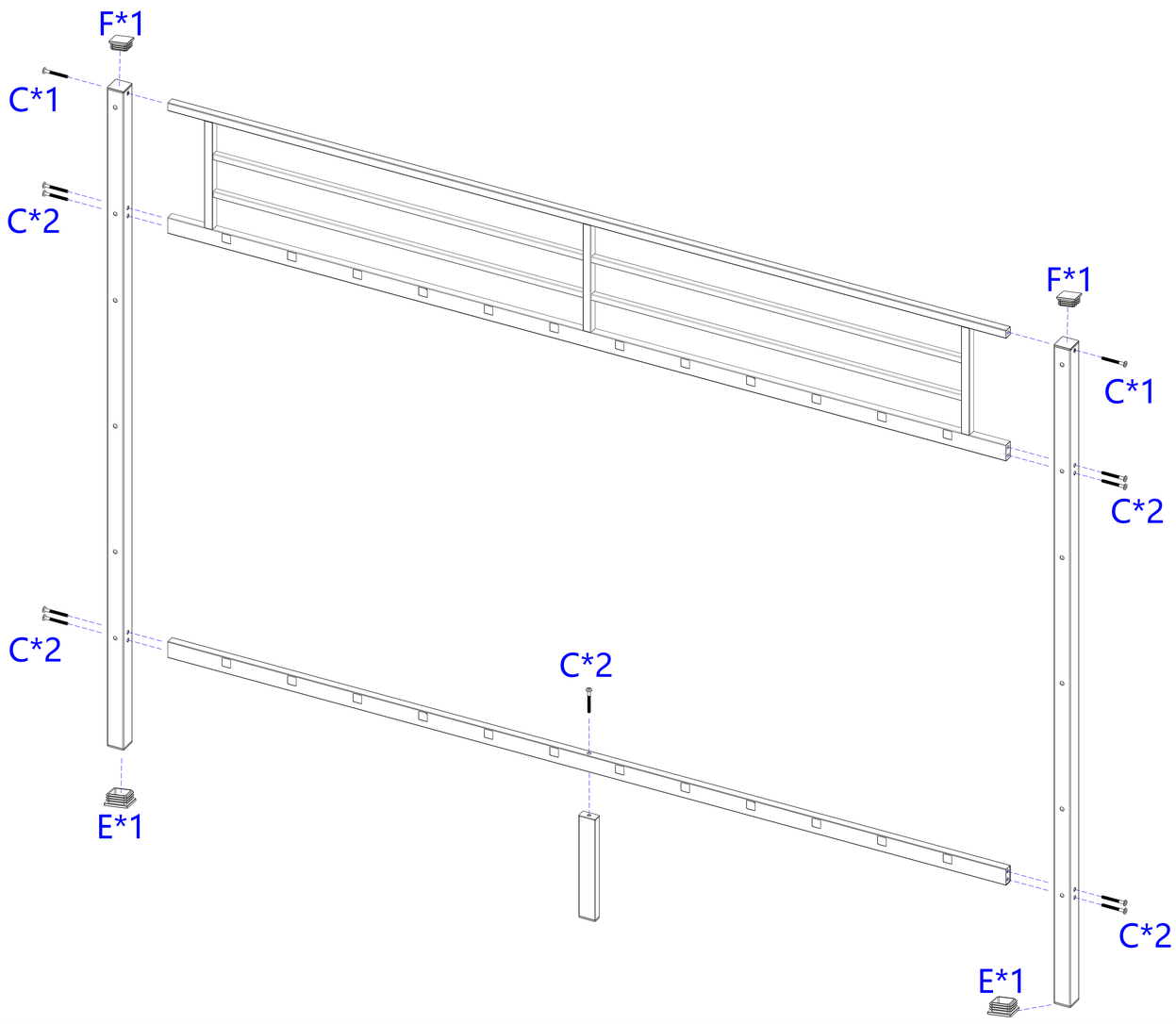

	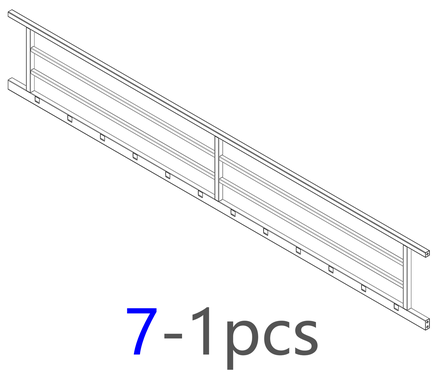	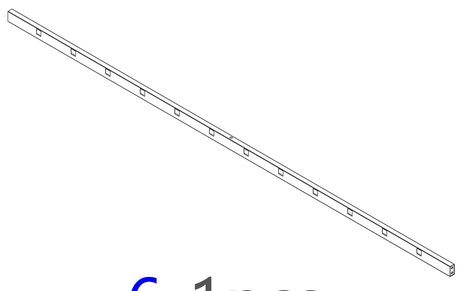	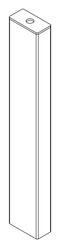	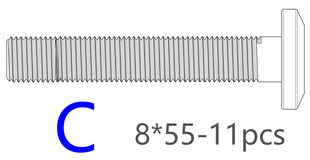 C 8*55-11pcs 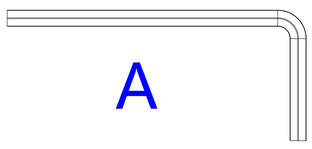 A
2-2pcs	7-1pcs	6-1pcs	13-1pcs	

Step 2: Use hardware A and C to connect #1 and #7 together.

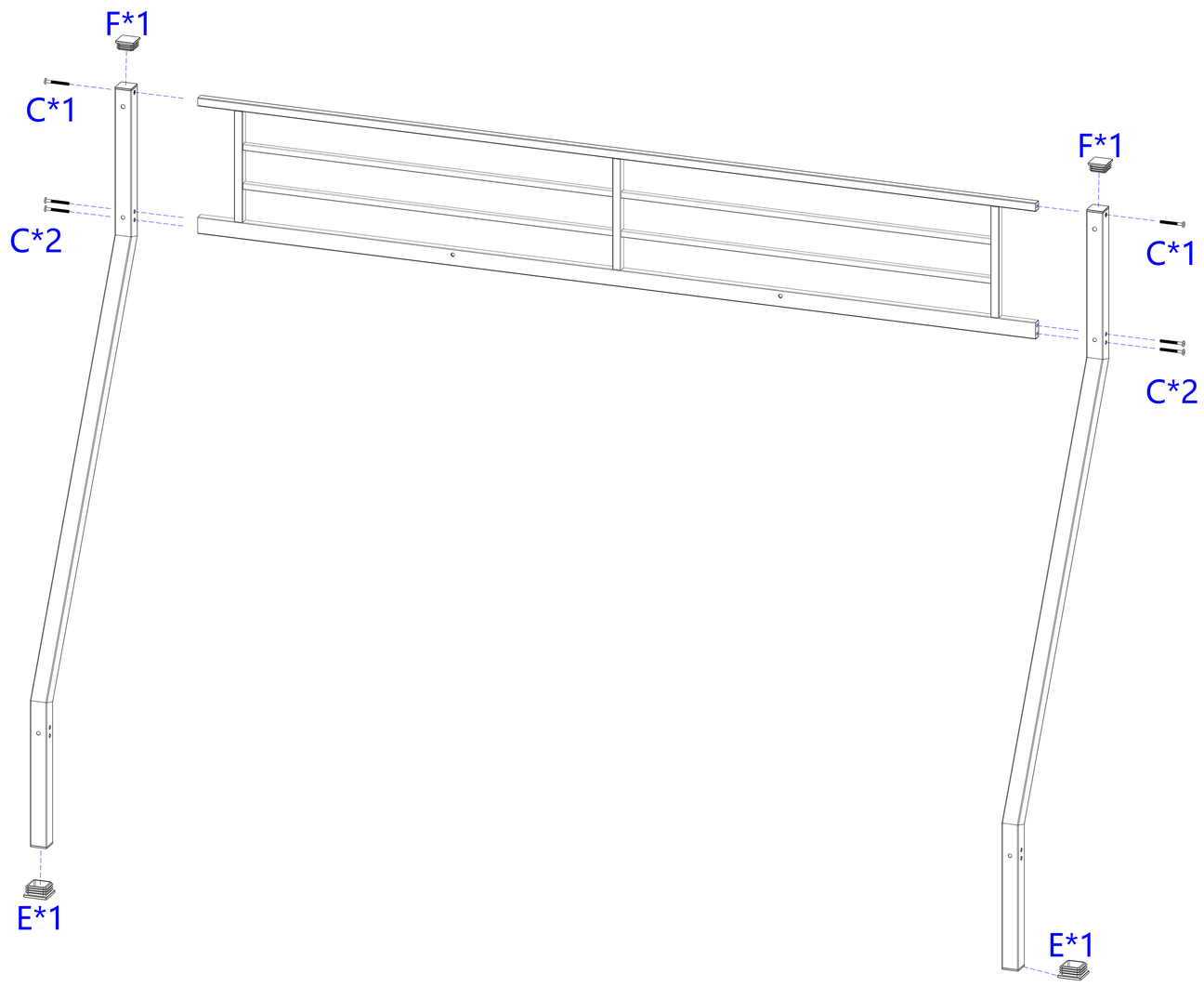

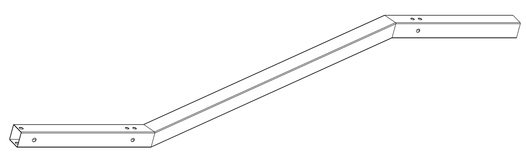 1-2pcs	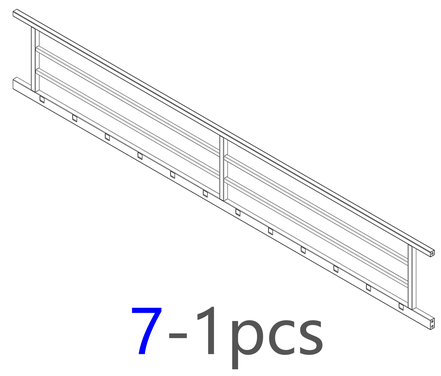 7-1pcs	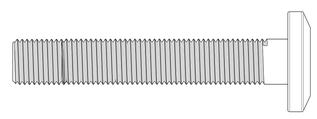 C 8*55-6pcs	A

Step 3: Use hardware A, C, and B to connect #3 and #8 to the front part.

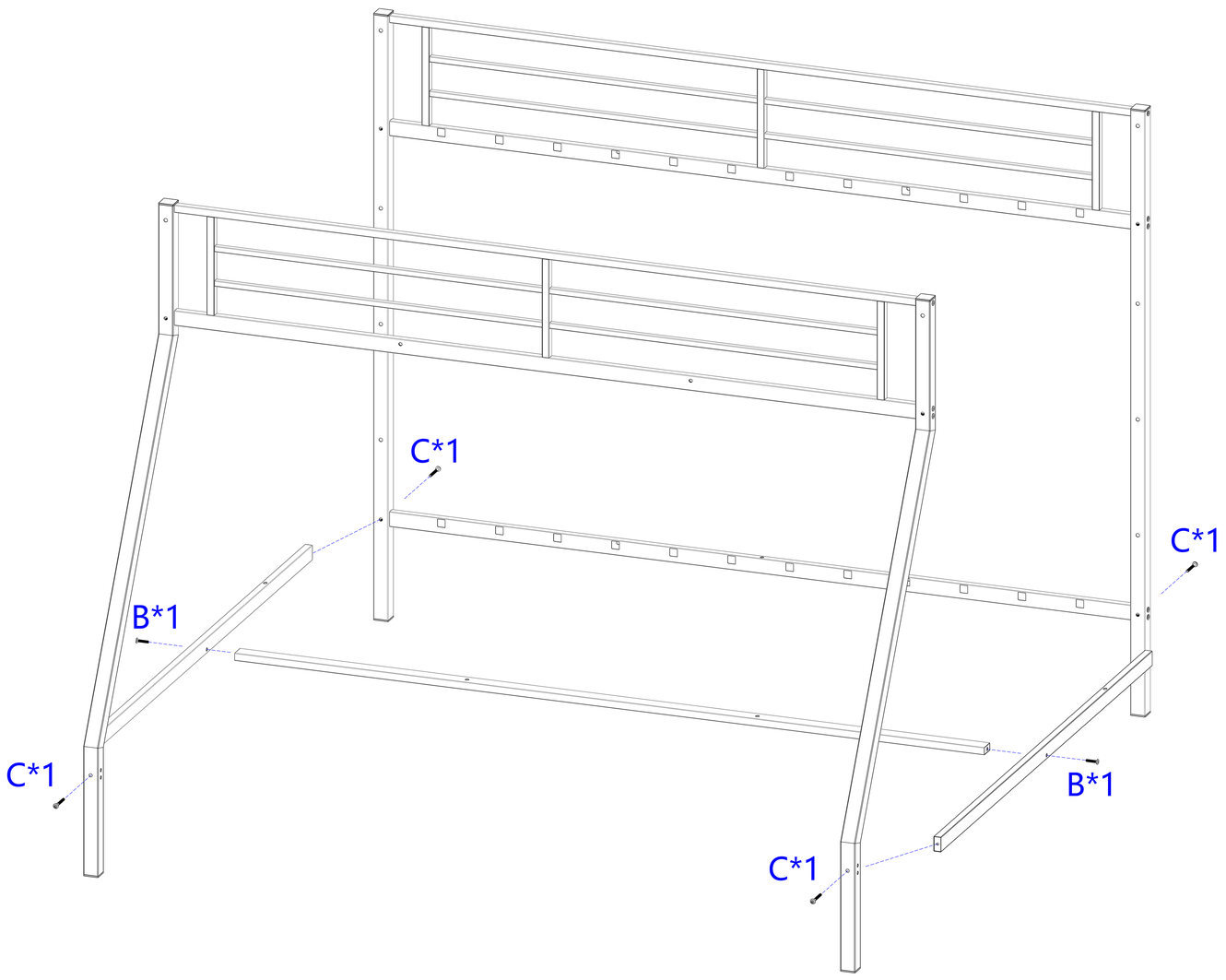

	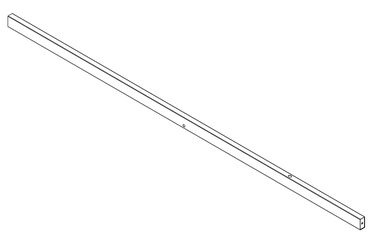 3-2pcs	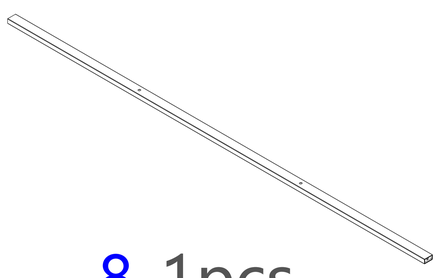 8-1pcs	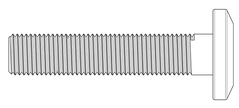 B 8*35-2pcs	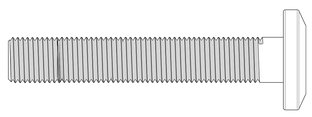 C 8*55-4pcs	A

Step 4: Use #9 and #10 to insert the corresponding square hole of #6.

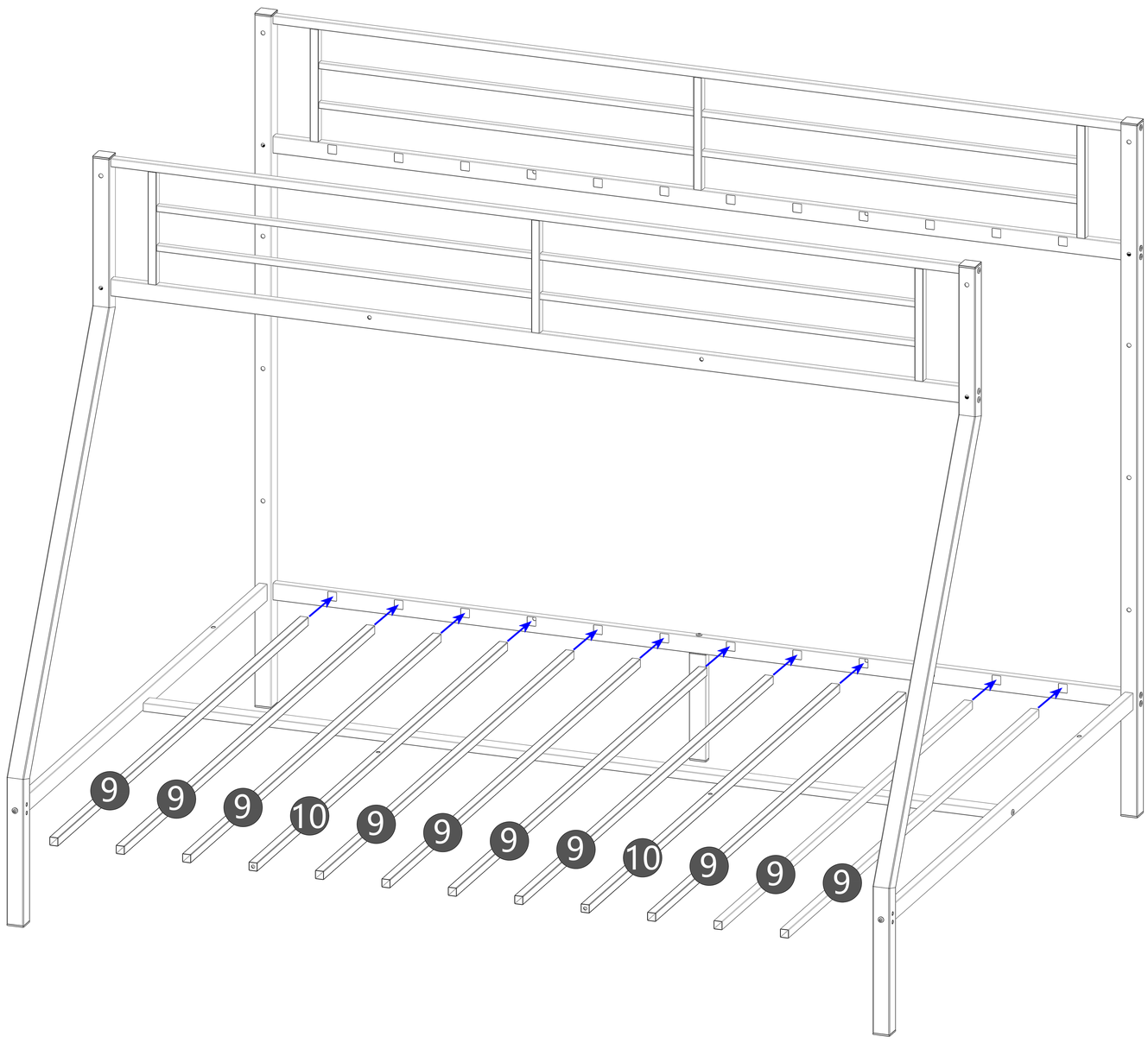

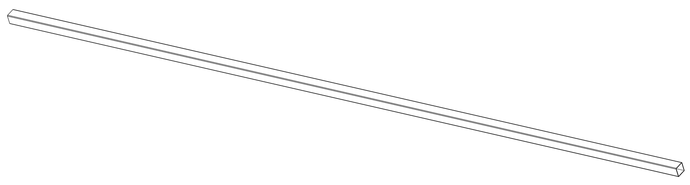 9-10pcs	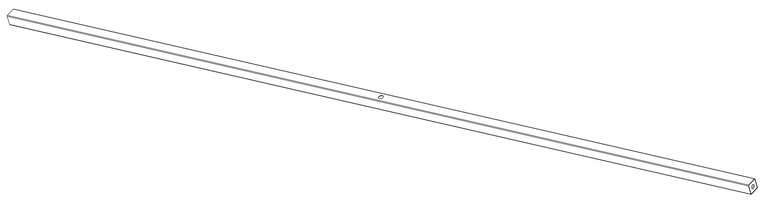 10-2pcs

Step 5: Use hardware A, B, and C to connect #6 together.

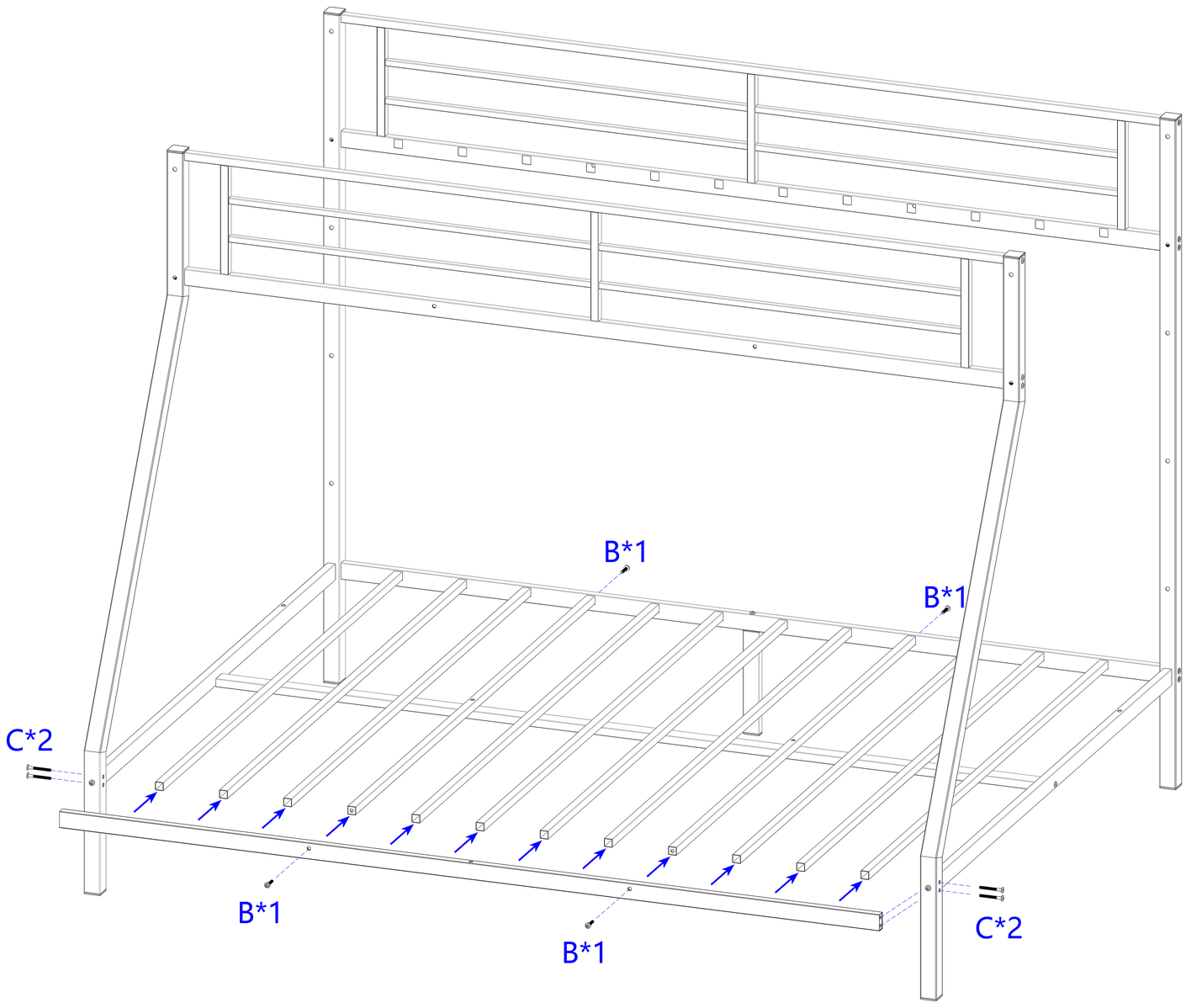

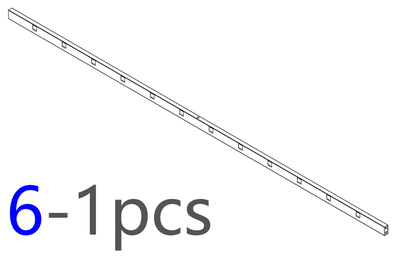 6-1pcs	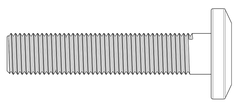 B 8*35-4pcs	C 8*55-4pcs	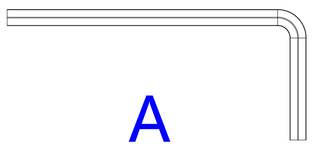 A

Step 6: Use hardware A and C to connect #13 together.

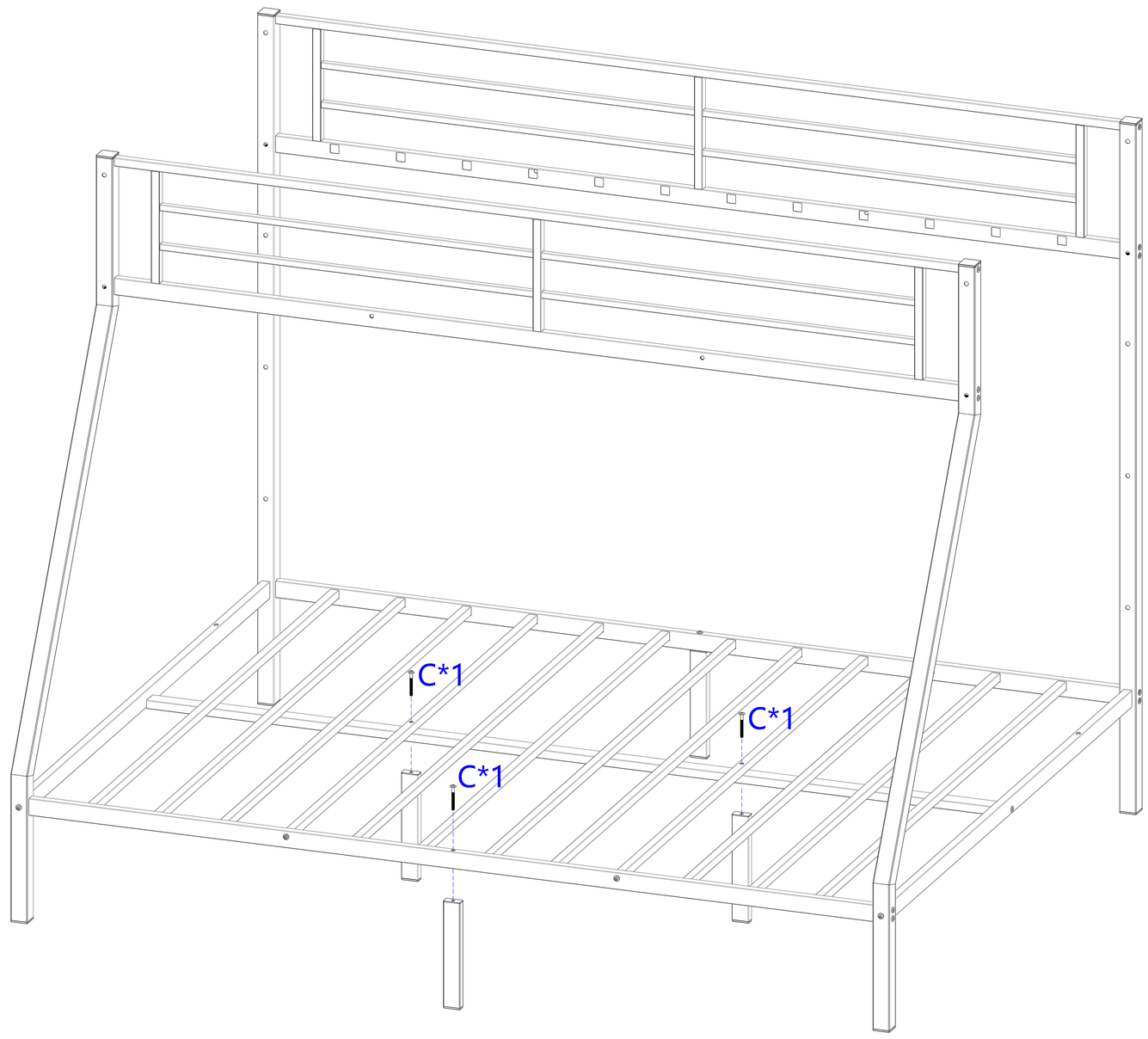

13-3pcs	C 8*55-3pcs	A

Step 7: Use hardware A, B, C, D to connect #5 together.

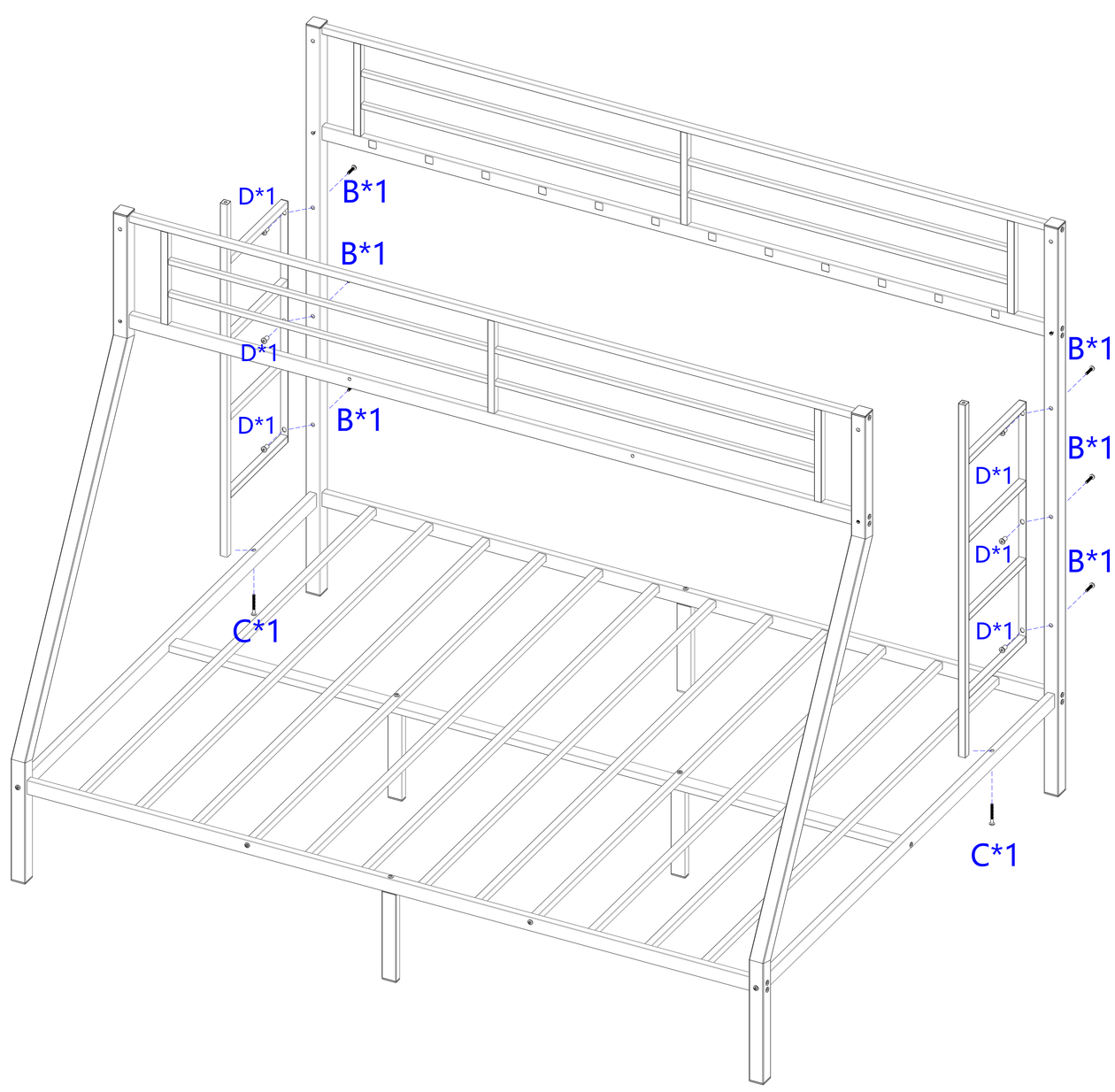

5-2pcs	D 8*16-6pcs	B 8*35-6pcs	C 8*55-2pcs	A

Step 8: Use hardware A, C, and D to connect #4 together.

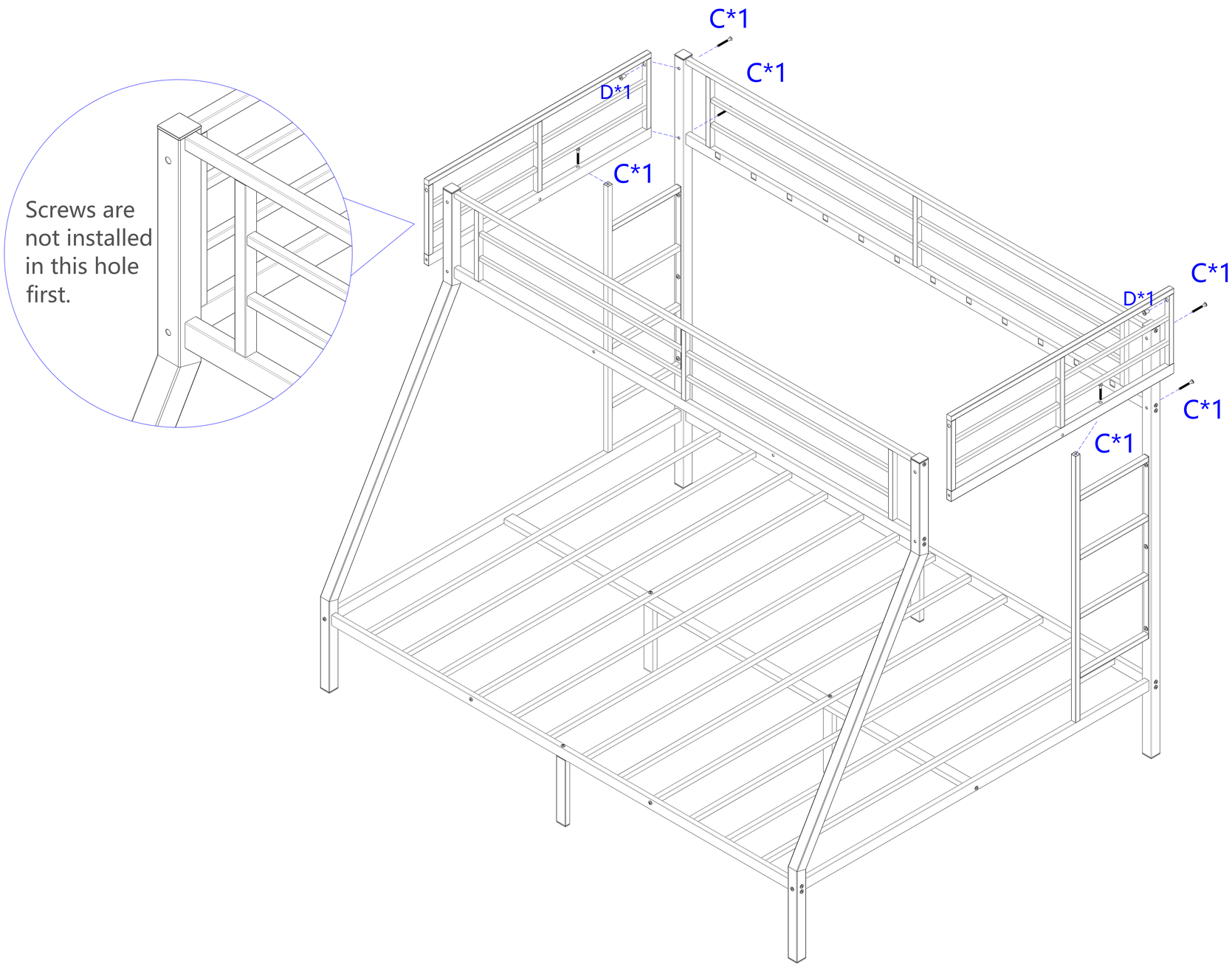

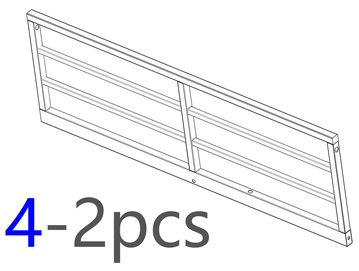 4-2pcs	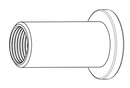 D 8*16-2pcs	C 8*55-6pcs	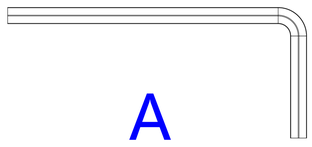 A

Step 9: Use hardware A and C to connect #8 together.

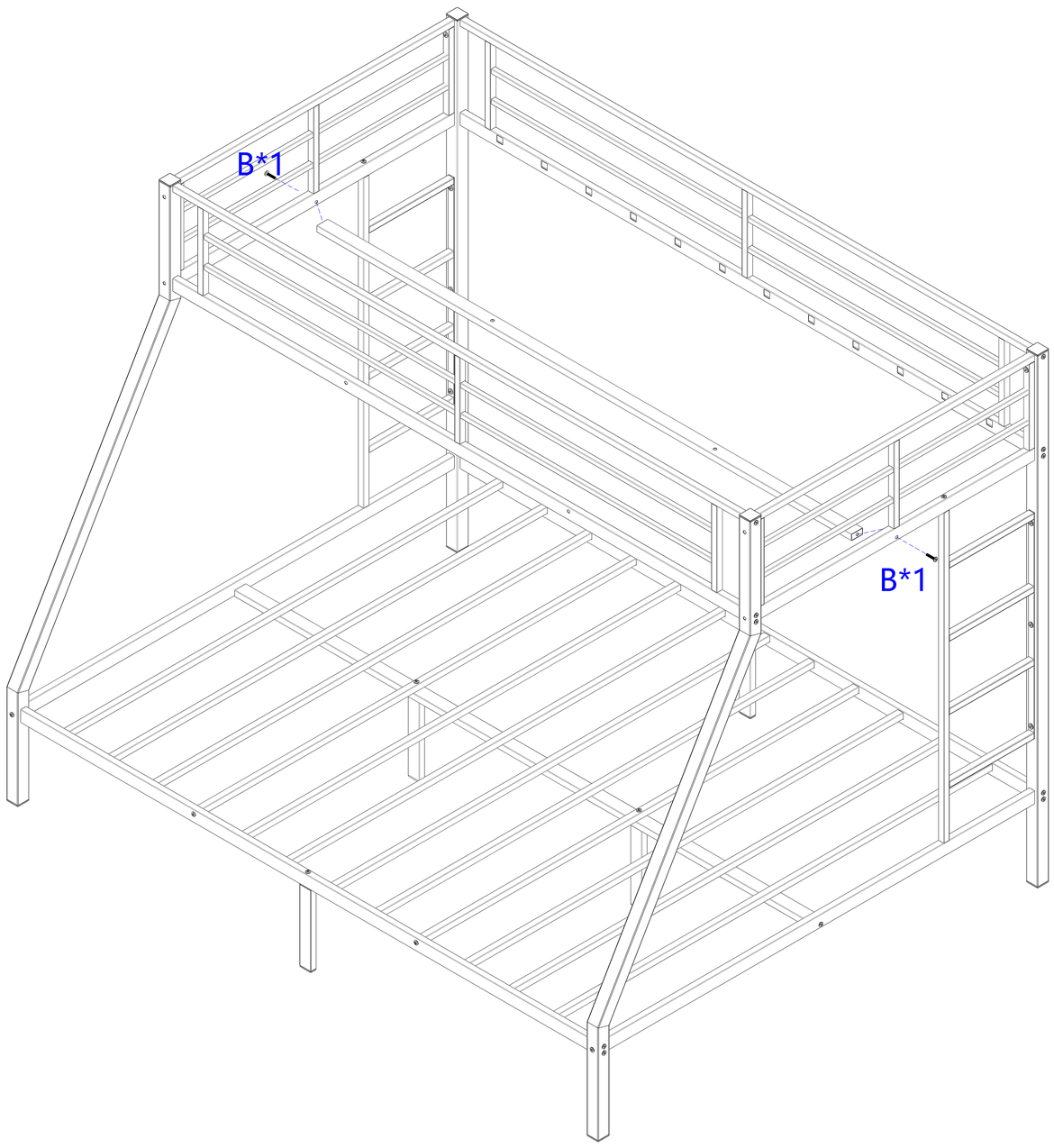

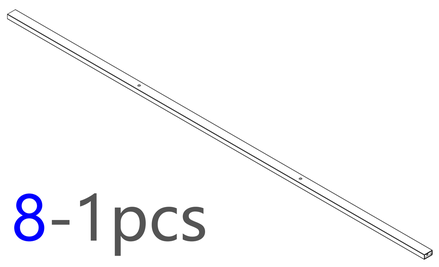 8-1pcs	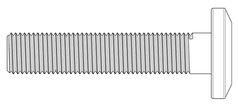 B 8*55-2pcs	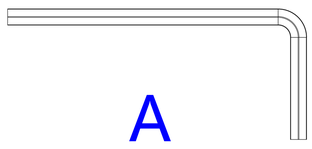 A

Step 10: Use #11 and #12 to insert #7 into the corresponding square hole.

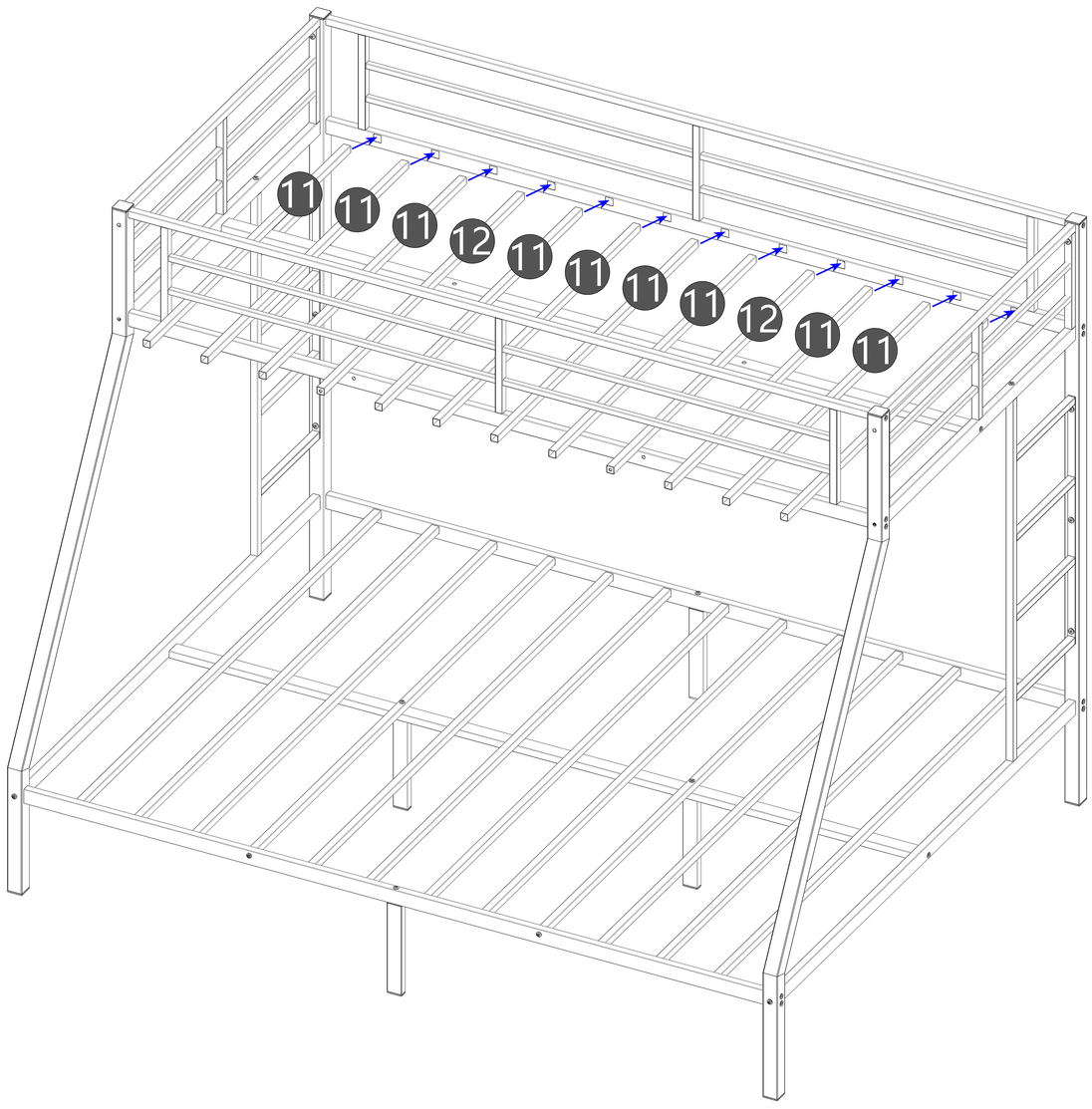

11-10pcs	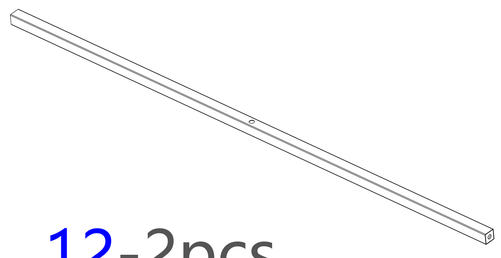 12-2pcs

Step 11: Use hardware C and D to tighten the #1 and #4 connections, hardware B and D to tighten the #8 and #12 connections, and hardware B to tighten the #7 and #12 connections.

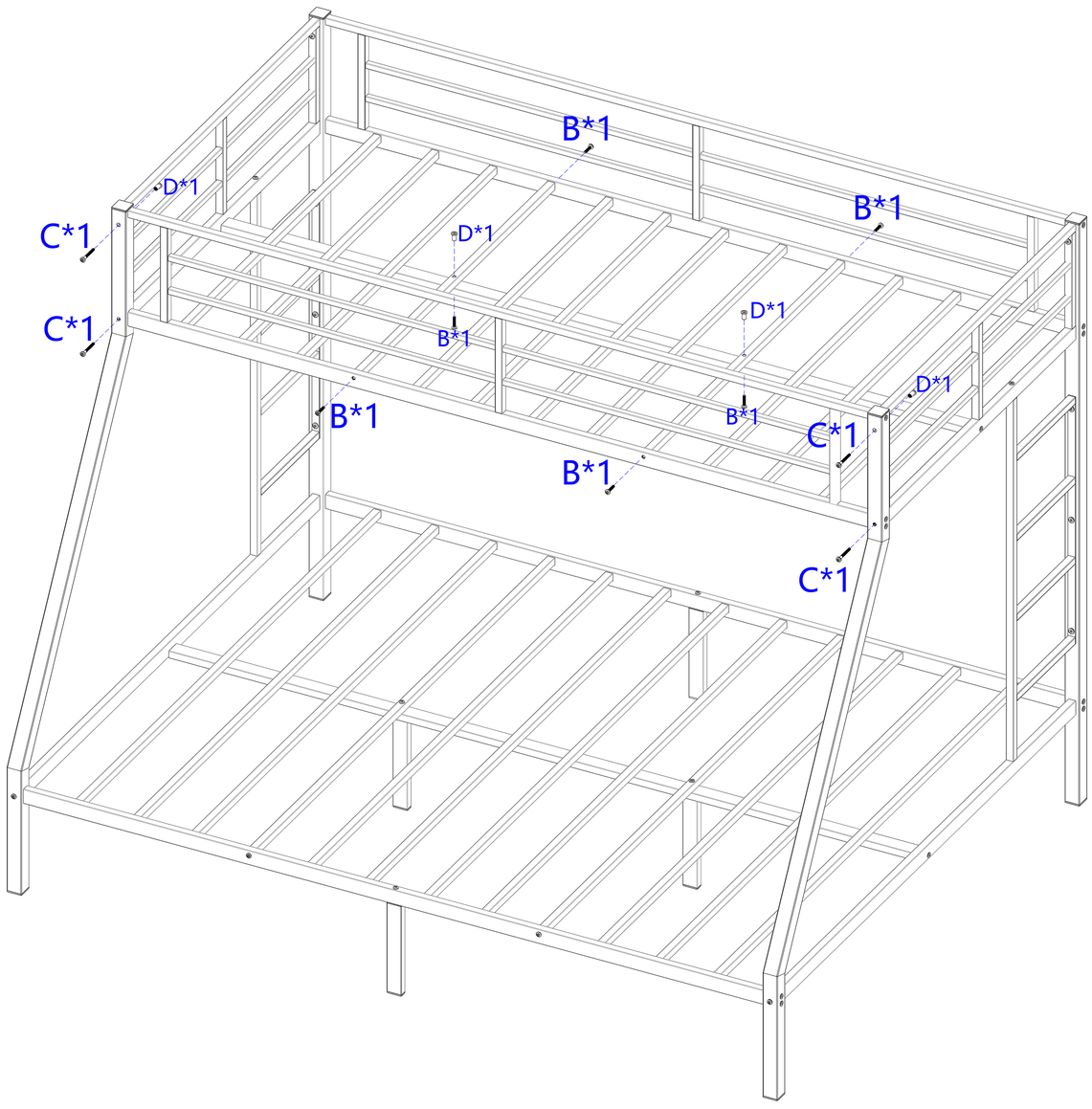

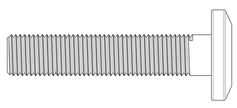 B 6*35-6pcs	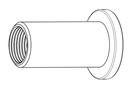 D 8*16-4pcs	C 8*55-4pcs	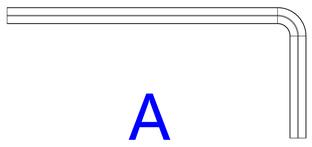 A

Completed attic bed

Note: Tighten all the steps before use, thank you.

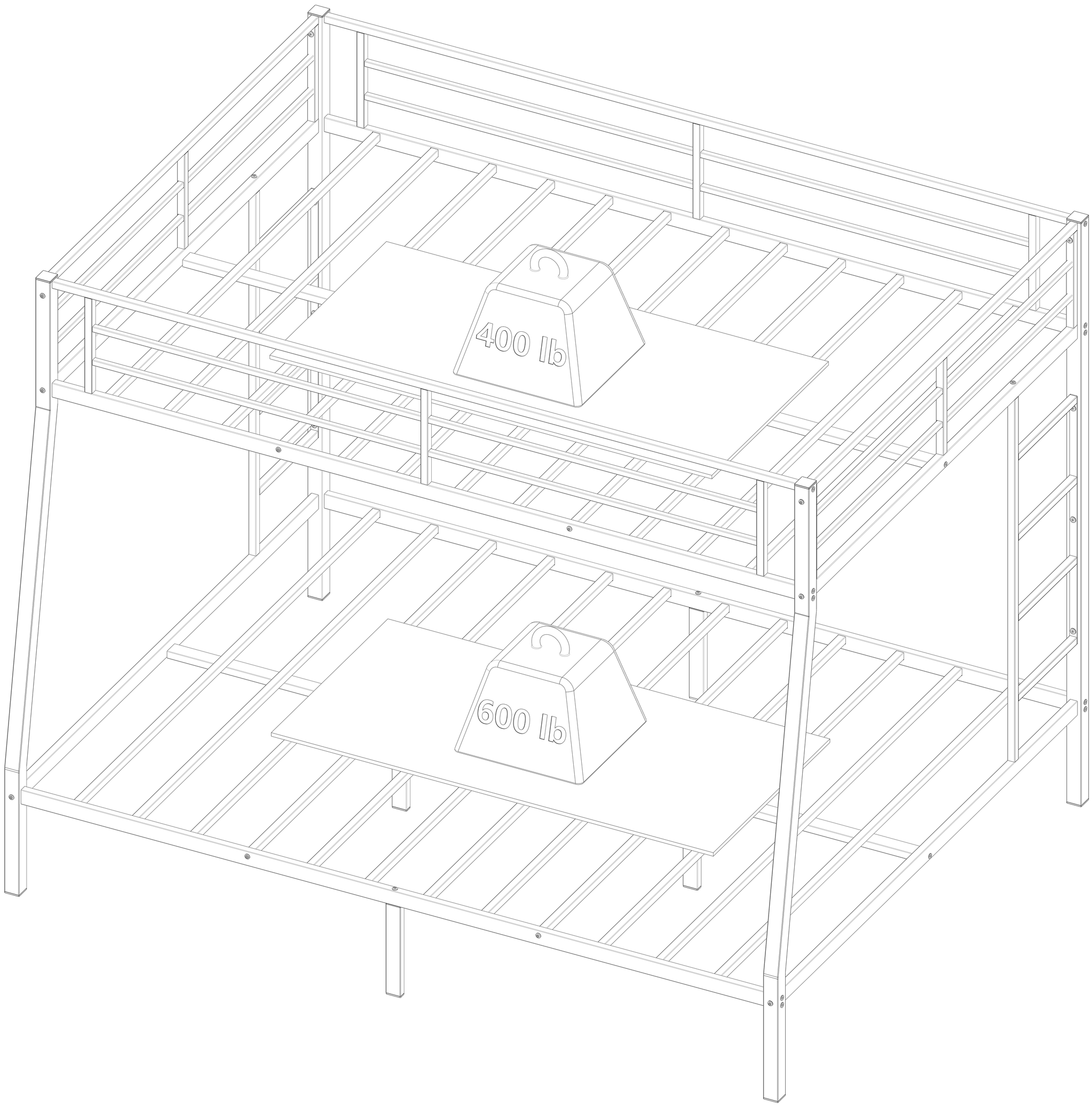

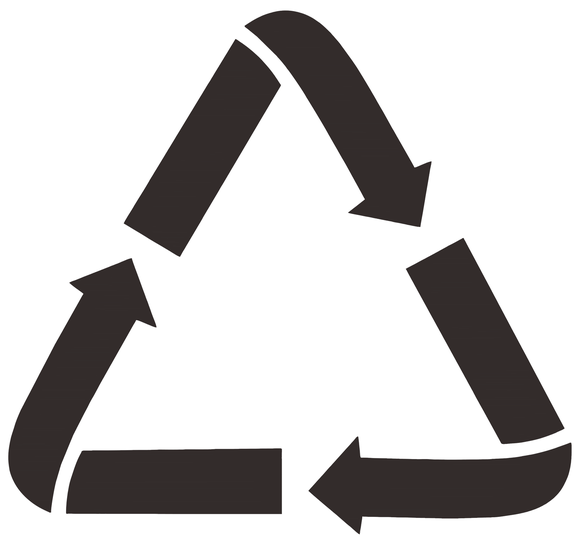

Recyclable garbage