JAMIE YOUNG Cº

CONFETTI WALL SCONCE

4CONF-SCWP

SAFETY, INSTALLATION & CARE INSTRUCTIONS

SAVE THESE INSTRUCTIONS

IMPORTANT SAFETY INSTRUCTIONS

READ THESE INSTRUCTIONS COMPLETELY BEFORE STARTING

We strongly recommend that all direct-wired lighting products be installed by a licensed electrician. Two people may be required for installation. DO NOT EXCEED the rated bulb wattage. Keep flammable materials away from bulb. This light fixture is shipped with all internal wiring intact. Do not open the product or alter the wiring in any manner.

Installation requires an electrical junction box in the wall sufficient to support the weight of the fixture.

This fixture weighs: 2.600 Kgs / 5.730 lbs

WARNING: Be certain that the power to the electrical junction box is turned off at the Circuit breaker before installation. Turning the power off at a light switch is not Sufficient to prevent electrical shock.

CAUTION: Prior to installation, locate All INCLUDED PARTS before disposing of packaging materials.

Tools Required For Installation	
Screwdriver	Pliers
Electrical Tape	Wire Connectors
Wire Cutters	Adjustable Wrench

Parts not included but required	
A.	Wall Outlet Junction Box
B.	Ground Junction Box Wire
C.	Hot Junction Box Wire
D.	Neutral Junction Box Wire

Parts Included / Referenced (See Figure 1):			
E.	Sconce Cord	K.	Neutral Fixture Wire
F.	Mounting Bracket	L.	Wire Connectors
G.	Mounting Screws	M.	Backplate
H.	Ground Screw	N.	Backplate Top-Bottom Screws
I.	Ground Wire		
J.	Hot Fixture Wire		

JAMIE YOUNG Cº

CONFETTI WALL SCONCE

4CONF-SCWP

SAFETY, INSTALLATION & CARE INSTRUCTIONS

Installation Procedure (Refer to figure on pg.3):

1. SHUT OFF THE MAIN ELECTRICAL SUPPLY FROM THE MAIN FUSE BOX/CIRCUIT BREAKER.
2. Carefully unpack all fixture parts and hardware and lay them out on a clean work surface.
3. Loosen & remove the top and bottom screws (N) on the backplate by rotating them anti-clockwise using a screwdriver (Fig.1). Carefully separate the mounting bracket from the fixture canopy.
4. Secure the Mounting Bracket (F) to the Wall Outlet Junction Box (A) using the provided Screws (H). Tighten screws with a screwdriver until secure. Ensure it is properly aligned and firmly fixed (Fig.2).
5. Adjust the sconce power cord (E) position from the Backplate (M) based on the wall outlet junction box.
6. If needed, cut off any extra length of wire cord cable (E). When cutting the power cord, be sure to cut it so that it is at least 6” (152.4mm) long inside the Wall Outlet Junction Box (A). To prepare the cut power cord for installation process, use wire strippers to prepare the ends of the two wires so that there is about 1/2" of exposed wire for the Plastic Wire Connectors (L).
7. Gently pull existing Ground Wire (B), Hot (C), and Neutral (D) Junction Box Wires down from the wall Junction Box (A) (Fig.3).
8. Carefully inspect the Wall fixture’s wires. The Neutral Fixture Wire (K) is White. The Hot Fixture Wire (J) is Black, and the Ground Wire (I) is Green.
9. Attach the Ground Wire (I) from the fixture to the Ground Junction Box Wire (B); It usually has green insulation around it or is bare wire. Fasten them together with a plastic wire Connector (L) and wrap the connection with electrical tape. Make sure that no wire strands area exposed (Fig.3).
10. Connect the Neutral Fixture Wire (K) to the Neutral Junction Box Wire (D); it usually has white insulation around it. Fasten them together with a plastic wire Connector (L) and wrap the connection with electrical tape. Make sure that no wire strands area exposed (Fig.3).
11. Connect the Hot Fixture Wire (J) to Hot Junction Box Wire (C); it usually has black insulation around it. Fasten them together with a plastic wire Connector (L) and wrap the connection with electrical tape. Make sure that no wire strands area exposed. Do not reverse the hot and neutral connections or safety will be compromised (Fig.3).
12. Place the sconce backplate over the mounted bracket (F), aligning the top and bottom holes with the bracket (Fig.4).
13. Tighten the top and bottom screws using a screwdriver until the backplate/fixture is firmly secured to the mounting bracket. Ensure the fixture is straight, stable, and securely fixed (Fig.4).
14. Insert One (1) 40W- maximum lightbulb-E12 (not included). Do not exceed the specified wattage.
15. Restore power to Wall Outlet Junction Box (A) and test the fixture.

CARE AND CLEANING

- To clean, wipe the light fixture ONLY with a soft, dry cloth.
- Do not pull the glass bead strings too hard

Fig.1- Remove the Mounting Bracket (F) from canopy as mentioned in the installation procedure

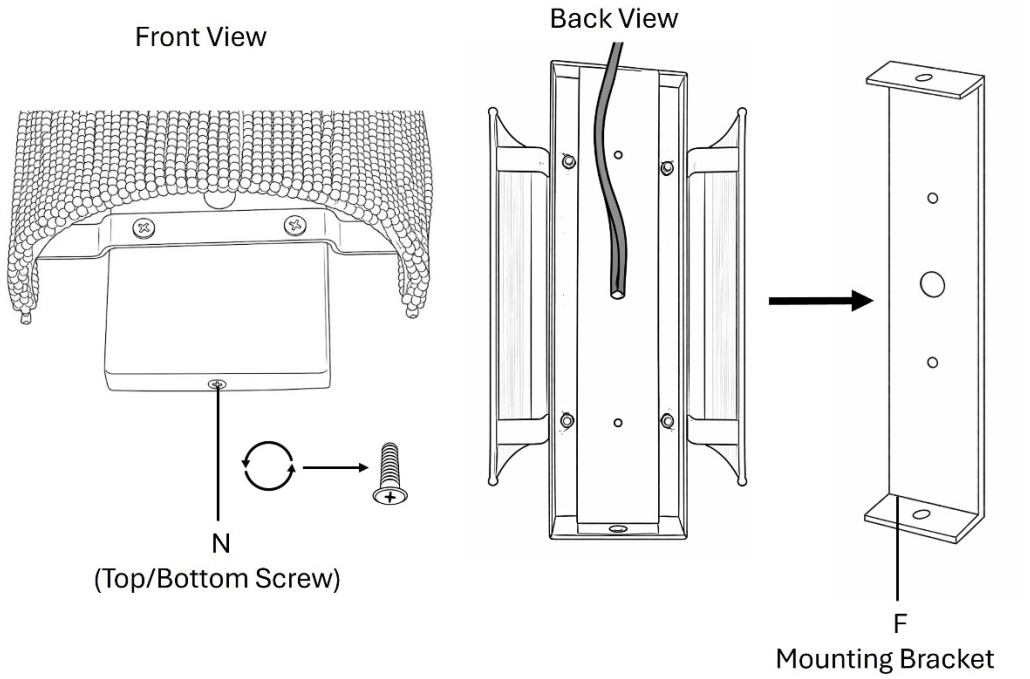

Fig.2- Attach the Mounting Bracket (F) to the Wall Outlet Junction Box.

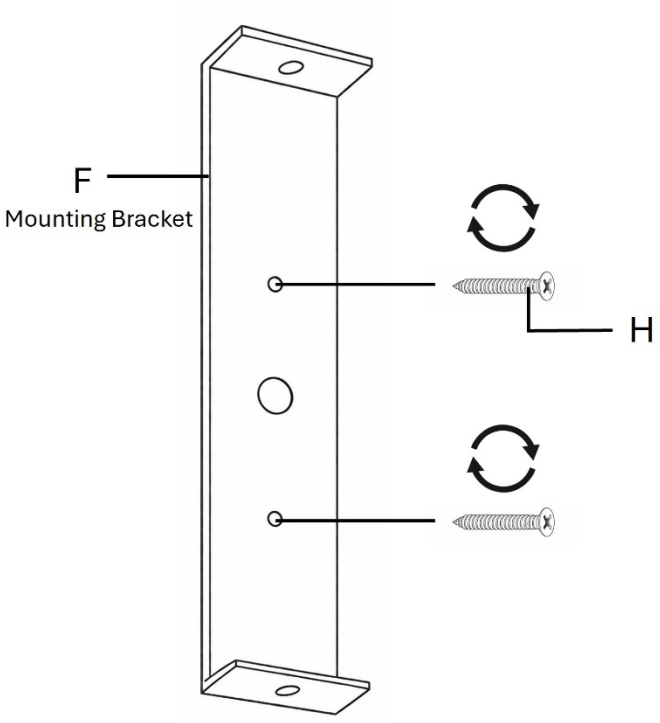

Fig.3- Connect the Fixture's wire with the Wall Outlet Junction Box Wires as mentioned in the installation procedure.

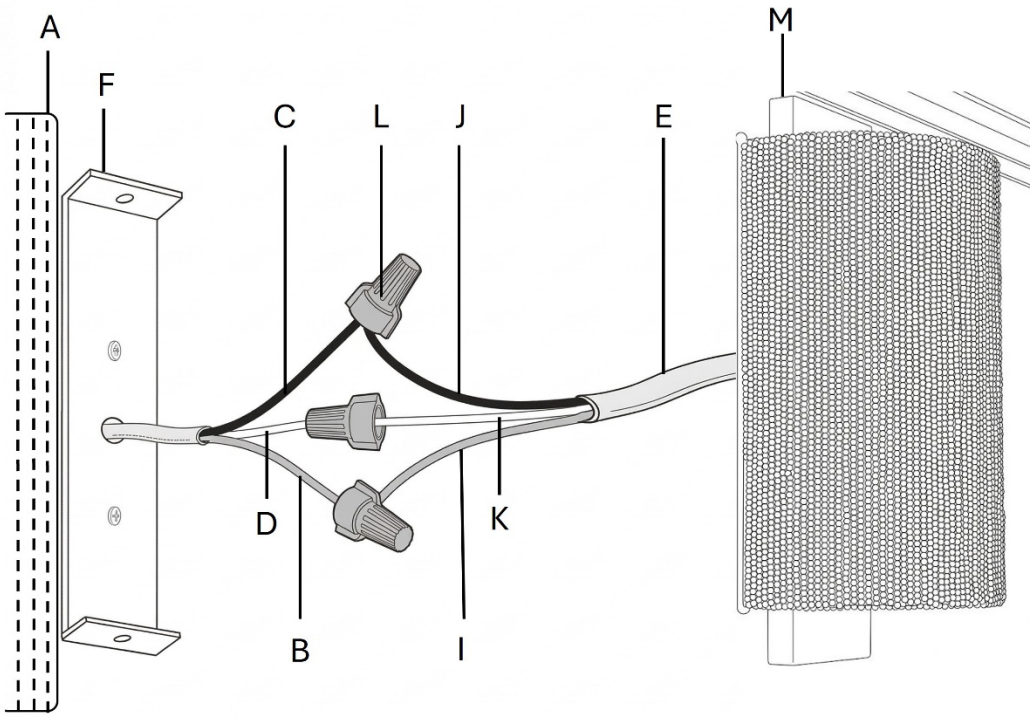

Fig.4 - Fix the Wall Sconce with the mounting bracket using Backplate Top-Bottom Screws (N)

