Open the package, classify the accessories according to the accessory list, and then classify them before installing.

Accessory table

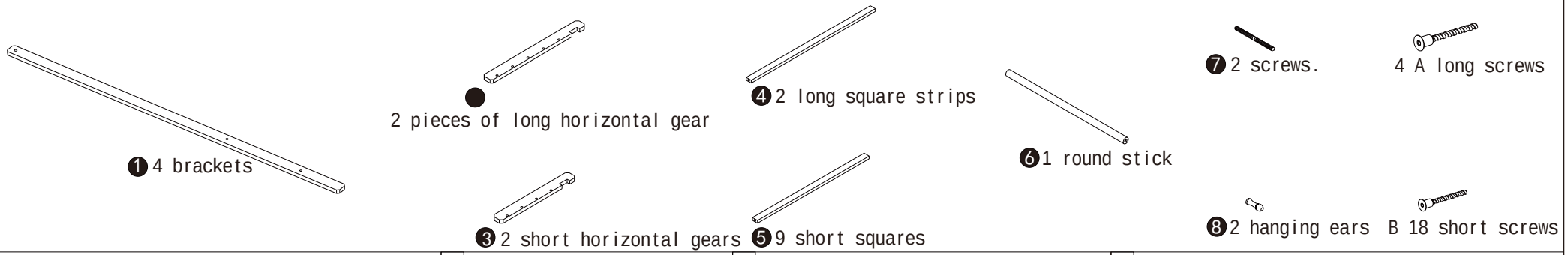

Installation Diagram

1

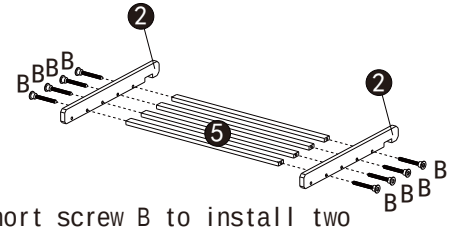

Use short screw B to install two long horizontal gears 2 on 4 short squares 5.

2

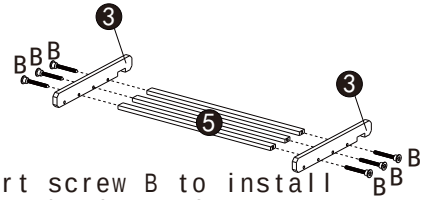

Use short screw B to install two short horizontal gear 3 on 3 short square 5

3

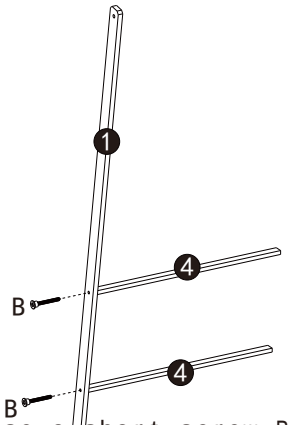

Use a short screw B to handle two.
The culine 4 is fixed on the bracket 1.

4

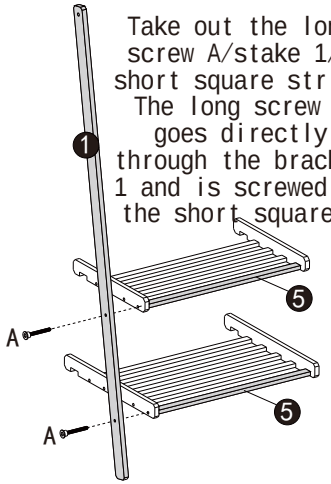

Take out the long screw A/stake 1/2 short square strip 5 The long screw A goes directly through the bracket 1 and is screwed on the short square 5.

5

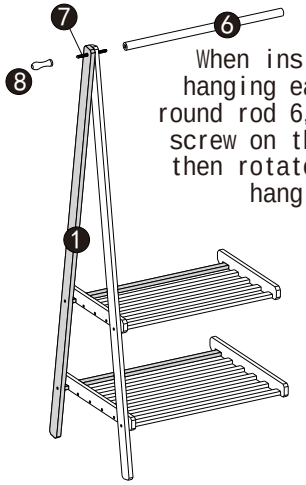

When installing the hanging ear/screw and round rod 6, first put the screw on the bracket and then rotate it with the hanging ear.

Install step 3 and get stuck in the horizontal gear .
In the notch, and then fix the hanging ear /screw/round rod 6 together.

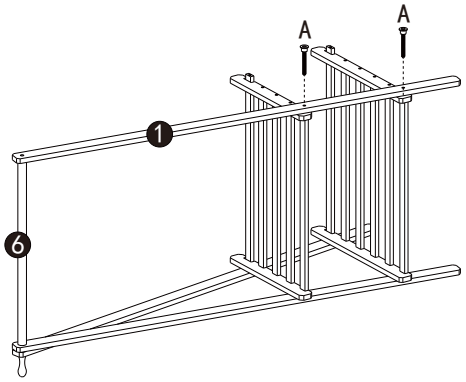

Screw bracket 1 directly on the short bar 5 with long screw A.

7

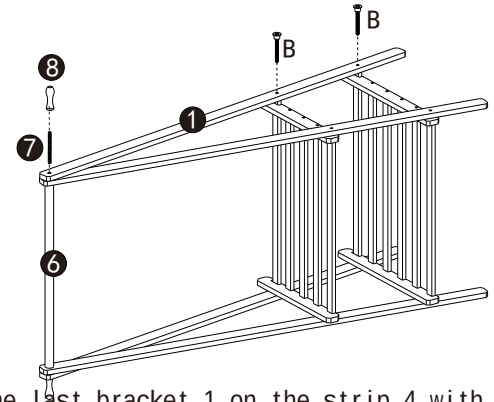

Screw the last bracket 1 on the strip 4 with short screw B.
Then the screw holds the round bar 6, hangs the ear , then lifts the screw and rotates again.

8

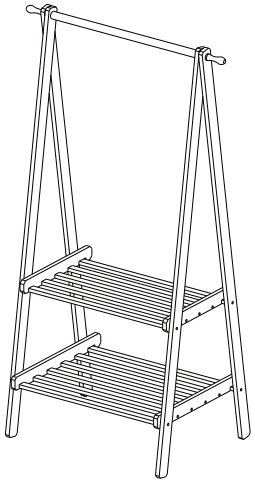

Installation completed