30" Bathroom Vanity

30 1/16 in. W x 18 in.D x 33 11/16 in.H
(76.3 cm x 45.7 cm x 85.6 cm)

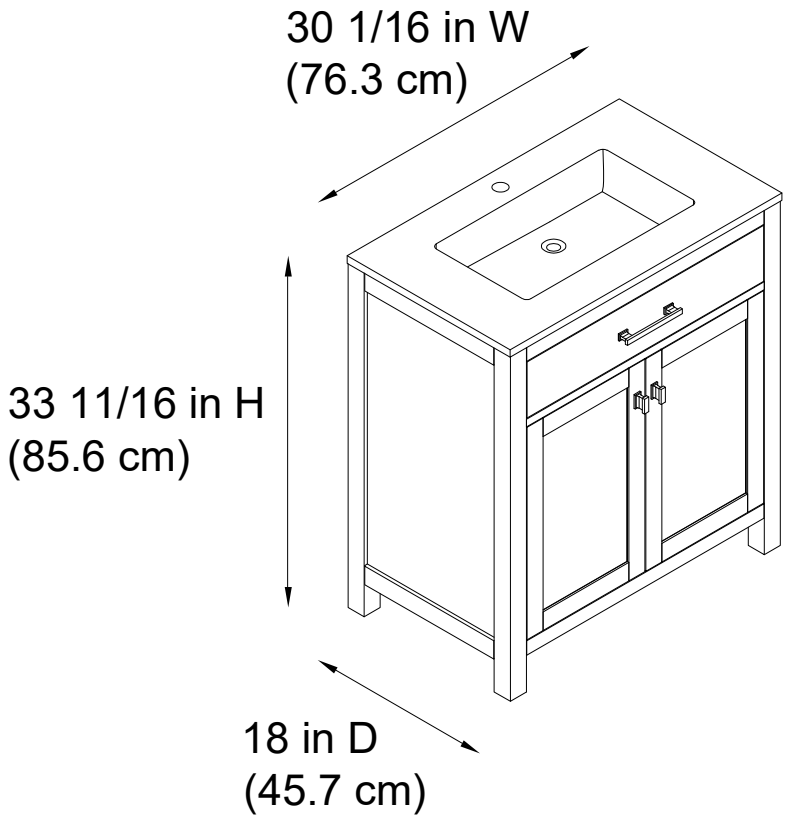

Top View

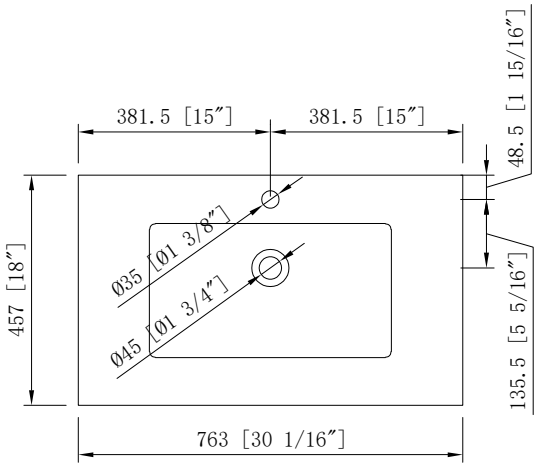

Back View

