ASSEMBLY INSTRUCTIONS

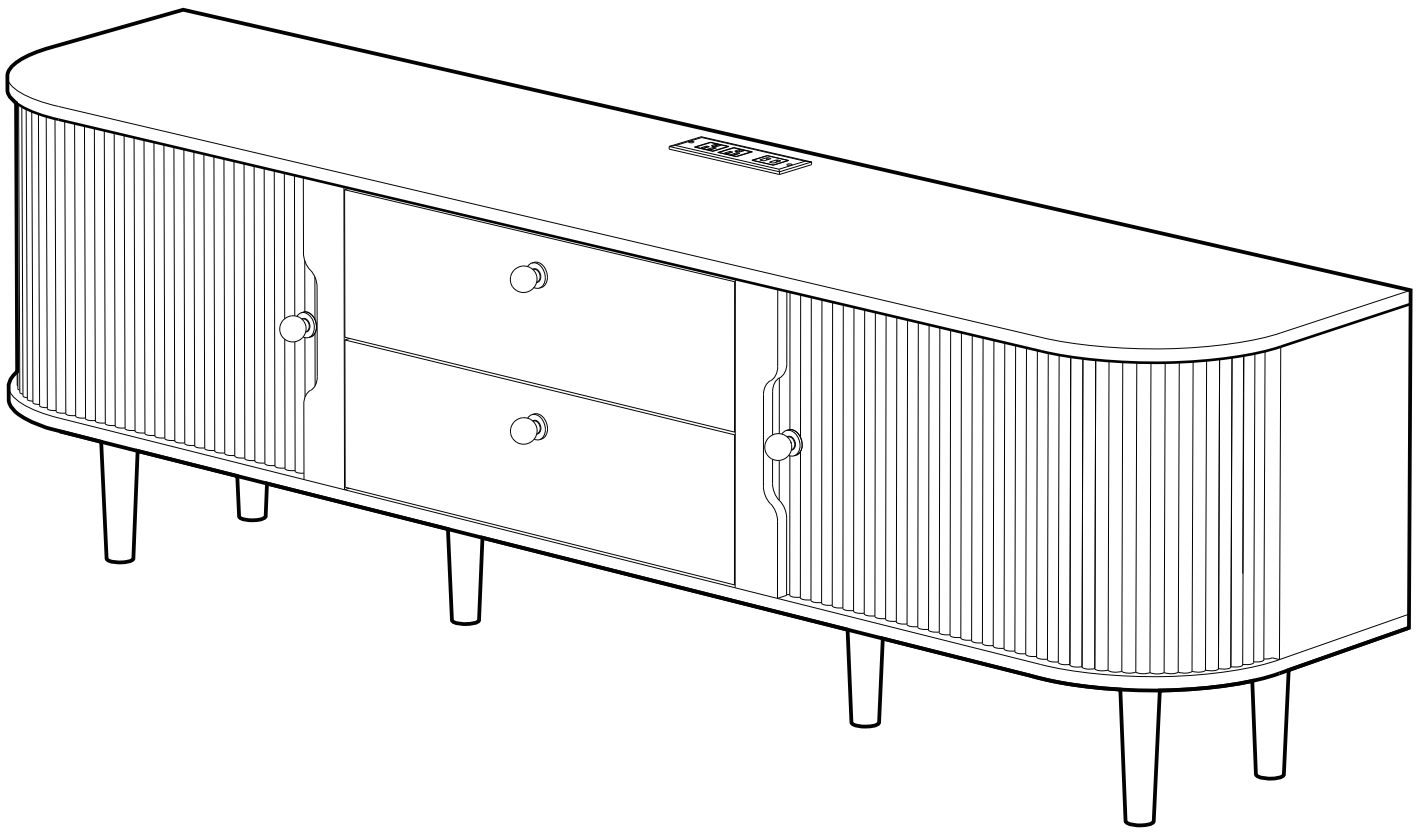

⚠ Warning	Flammable, please keep away from open flames!
⚠ Warnung	Entflammbar, bitte von offenen Flammen fernhalten!
⚠ Attention	inflammable, veuillez tenir à l'écart des flammes nues !
⚠ Attenzione	infiammabile, tenere lontano da fiamme libere!
⚠ Advertencia	Inflamable, mantener alejado de fuego!
⚠ Waarschuwing	Ontvlambaar, uit de buurt van open vuur houden!
⚠ Ostrzeżenie	Produkt Łatwopalny, trzymać z dala od otwartego ognia!

⚠ WARNING



Children have died from furniture tipover. To reduce the risk of furniture tipover:

- ALWAYS install Anti-tip device provided.
- NEVER allow children to stand, climb or hang on drawers, doors, or shelves.
- NEVER open more than one drawer at a time.
- Place heaviest items in the lowest drawer.

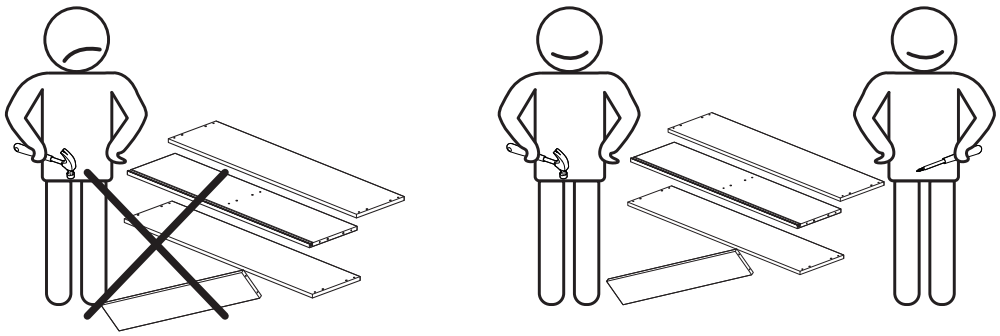

We recommend at least 2 people for the assembly.

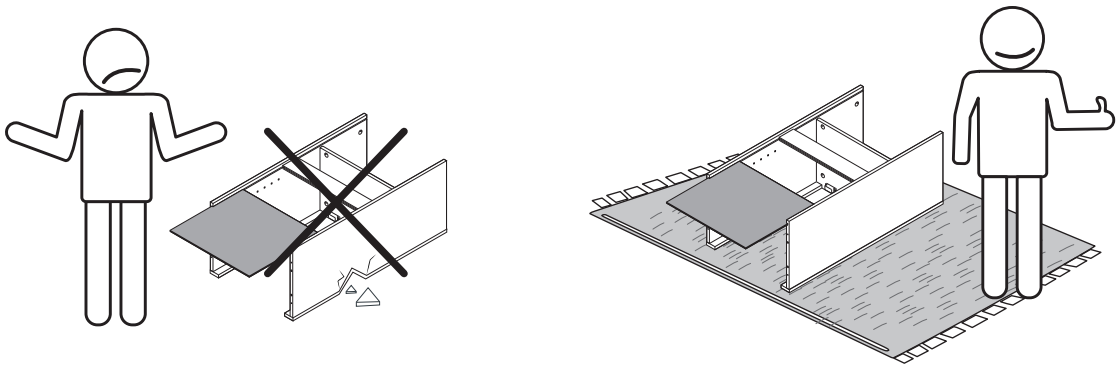

To prevent any damage during assembly, place a mat under the pieces.

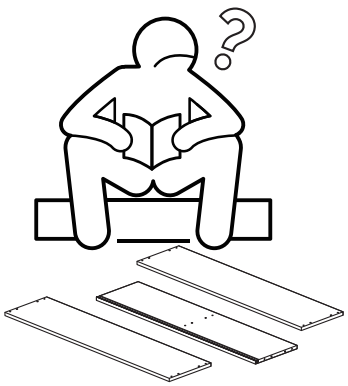

support@servicetimely.com

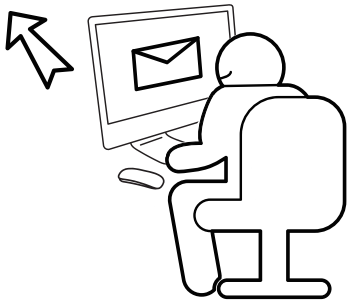

Any questions concerning assembly, contact us via email: support@servicetimely.com

PARTS DIAGRAM

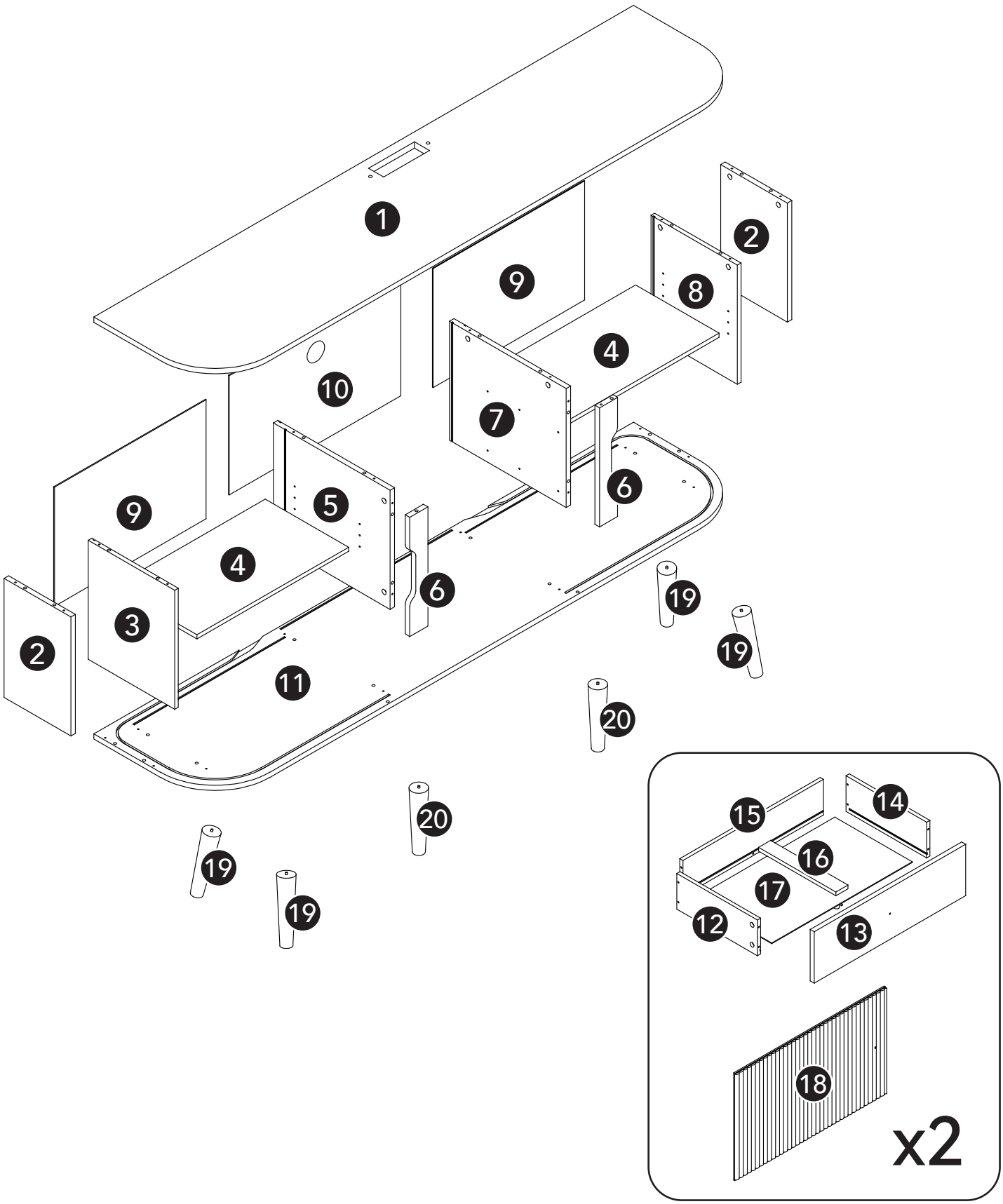

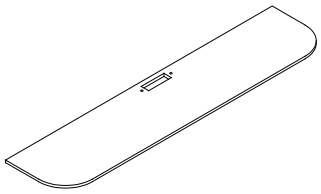

1 x 1

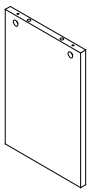

2 x 2

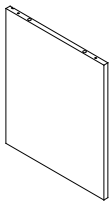

3 x 1

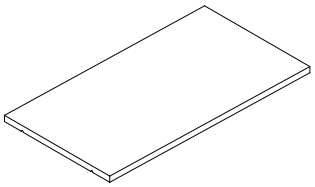

4 x 2

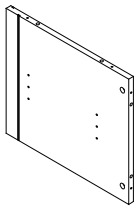

5 x 1

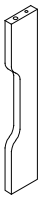

6 x 2

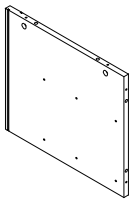

7 x 1

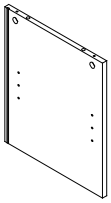

8 x 1

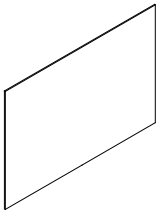

9 x 2

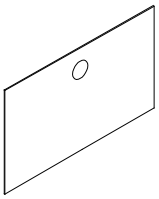

10 x 1

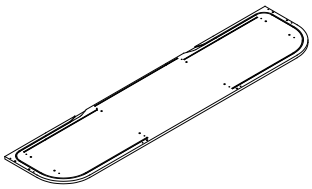

11 x 1

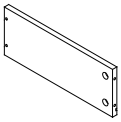

12 x 2

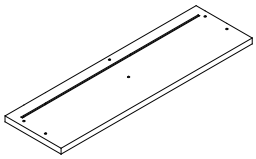

13 x 2

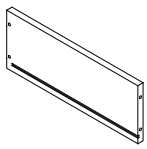

14 x 2

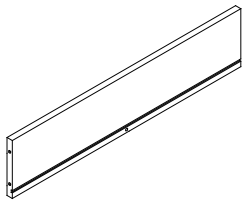

15 x 2

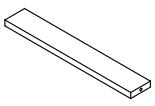

16 x 2

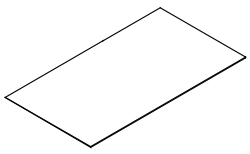

17 x 2

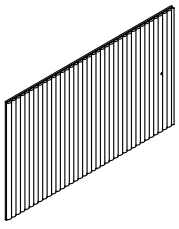

18 x 2



19 x 4



20 x 2

HARDWARES

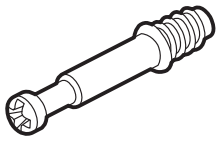

Ø6x35mm

A x 26



Ø15x10mm

B x 26

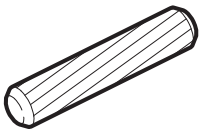

Ø6x30mm

C x 32

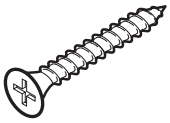

Ø4x40mm

D x 24



Ø3x12mm

E x 26



Ø4x12mm

F x 28

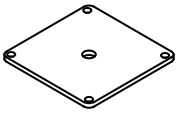

G x 2

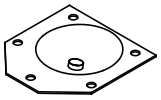

H x 4

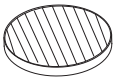

I x 4



J x 2

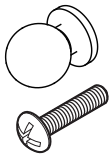

K x 4

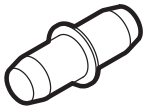

L x 8

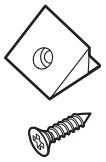

M x 12



N x 16

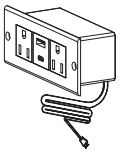

The product comes with a plug that varies by market.The one actually received shall in kind prevail.

O x 1

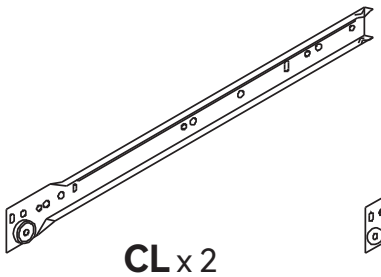

CL x 2

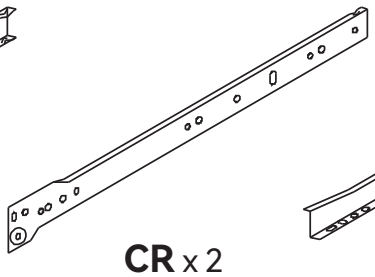

CR x 2

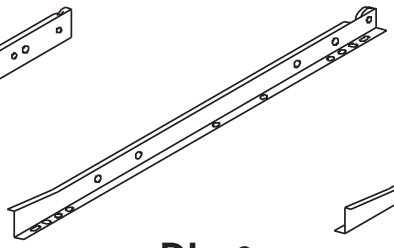

DL x 2

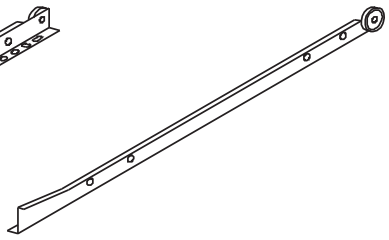

DR x 2

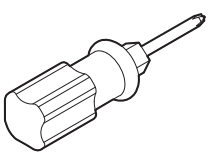

x 1

SPARE PARTS

The spare parts are the additional parts provided in case of missing or damaged ones. Keep the spare parts and tools for future use.

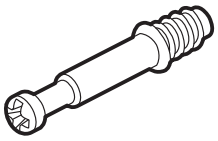

Ø6x35mm

A x 2



Ø15x10mm

B x 2

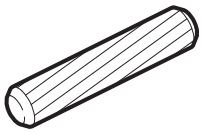

Ø6x30mm

C x 3

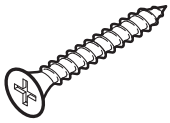

Ø4x40mm

D x 2



Ø3x12mm

E x 2



Ø4x12mm

F x 2

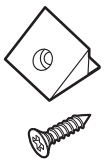

M x 1

CAM LOCK FASTEN SYSTEM

⚠ Insert the cam bolt into the hole, then insert the cam lock and tighten.

1

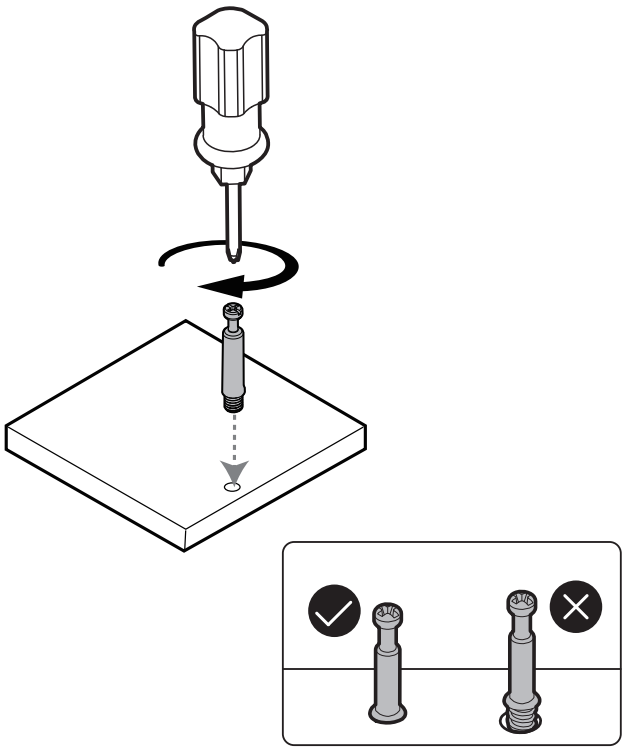

2

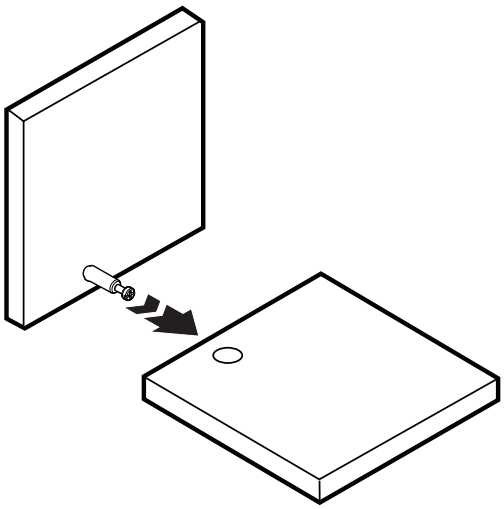

3

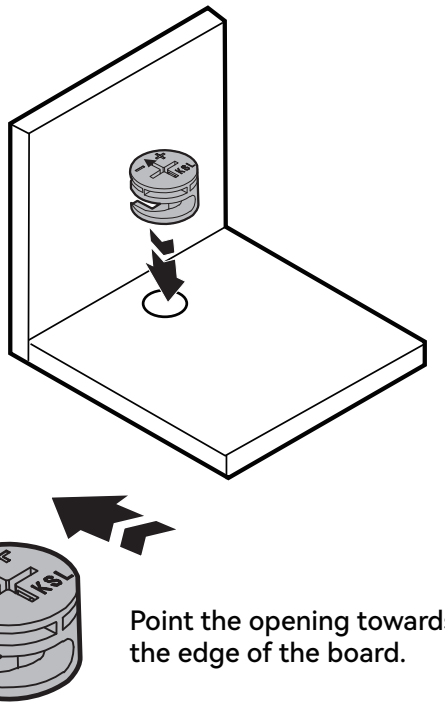

Point the opening towards the edge of the board.

4

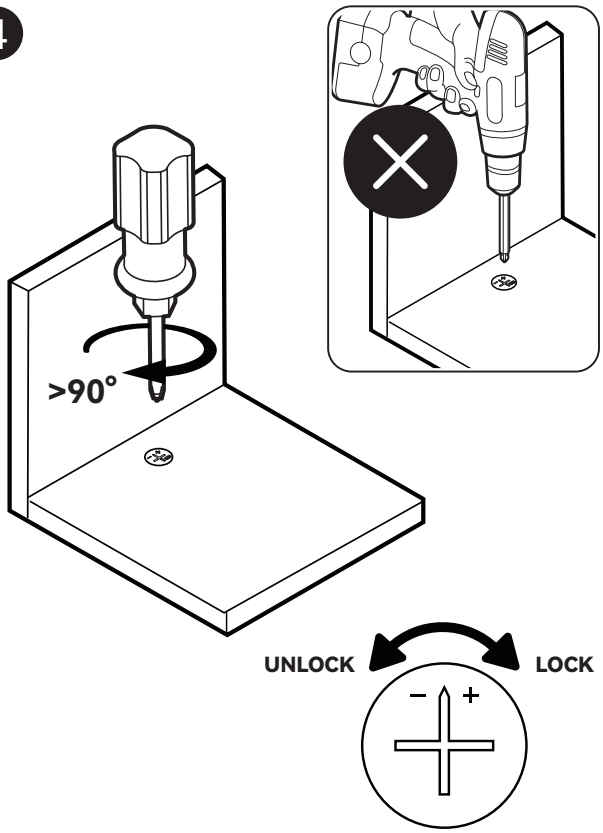

ASSEMBLY

1

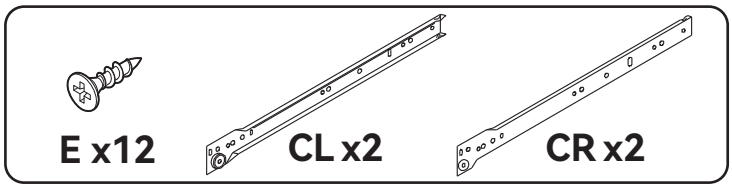
E x12
CL x2
CR x2

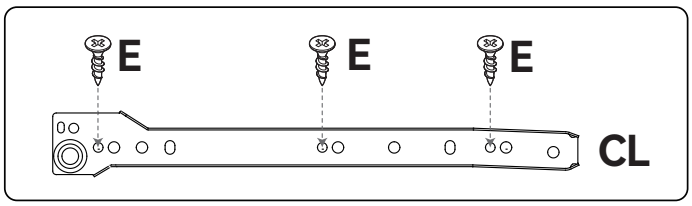
E
E
E
CL

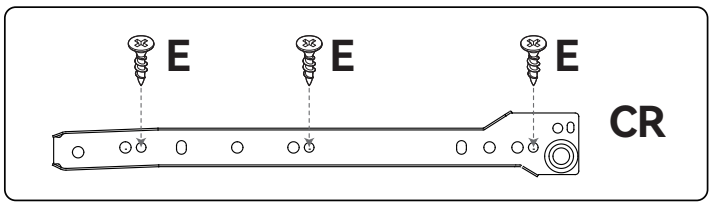
E
E
E
CR

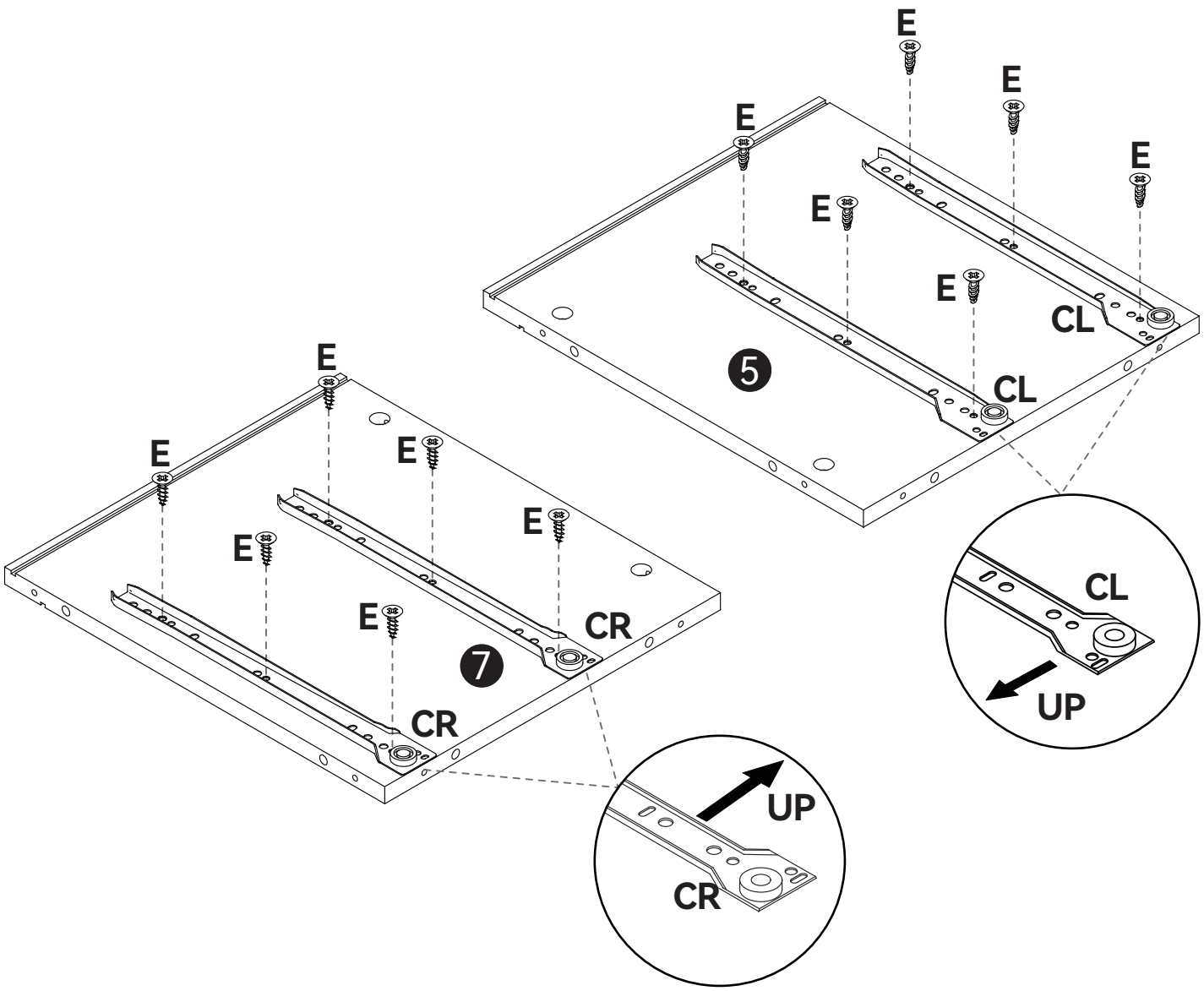
E
E
E
E
E
E
CL
5
CL
CL
UP
E
E
E
E
E
E
CR
7
CR
UP
CR

2

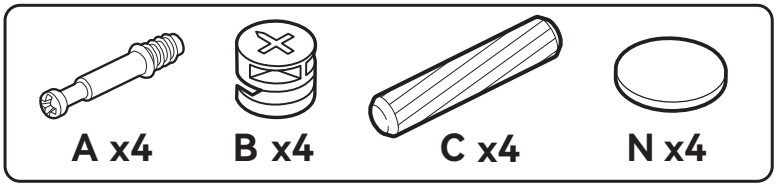

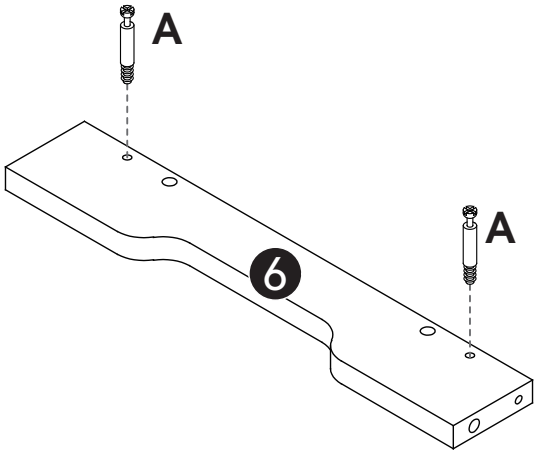

x2

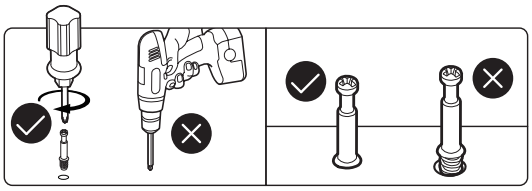

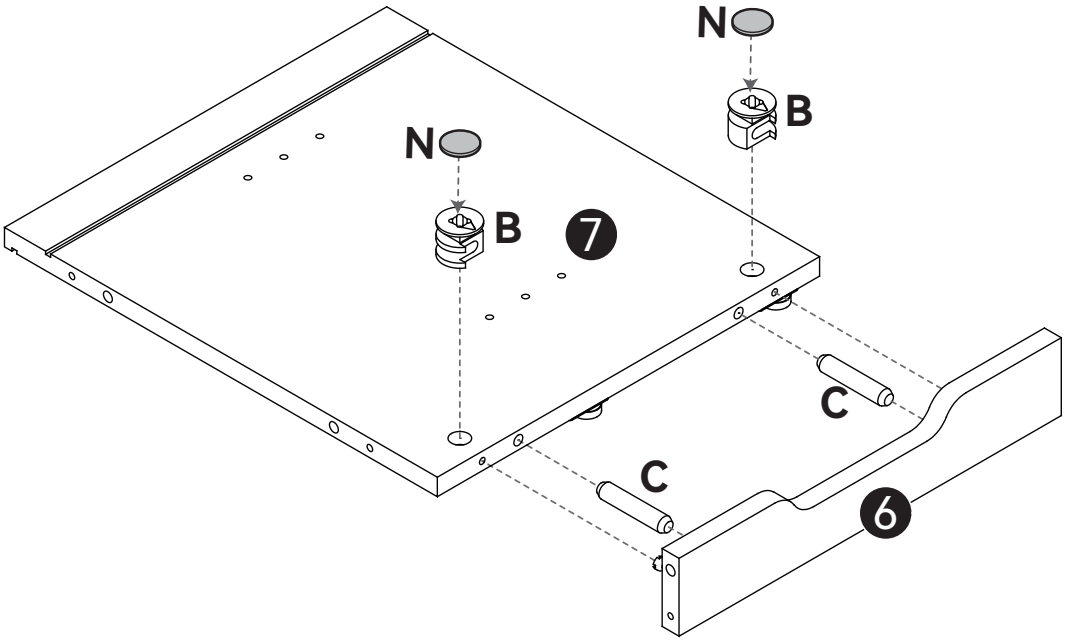

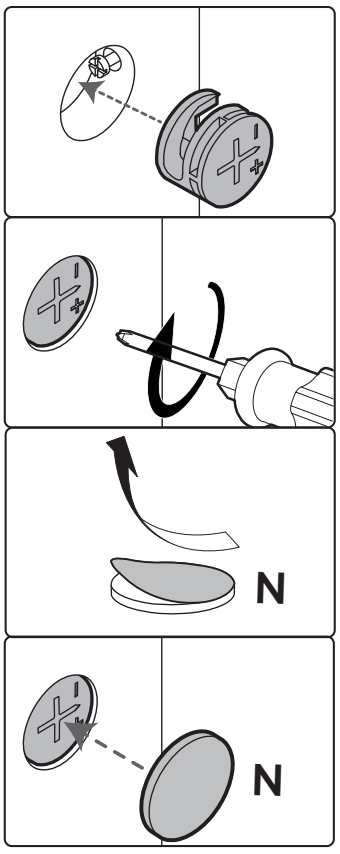

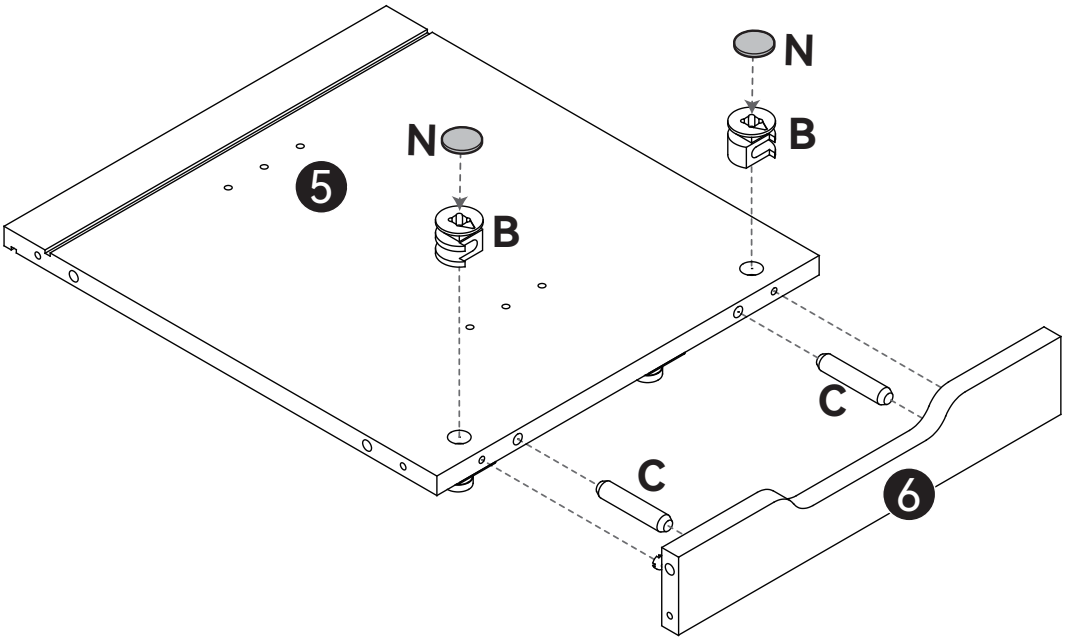

3

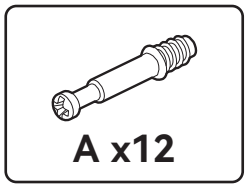

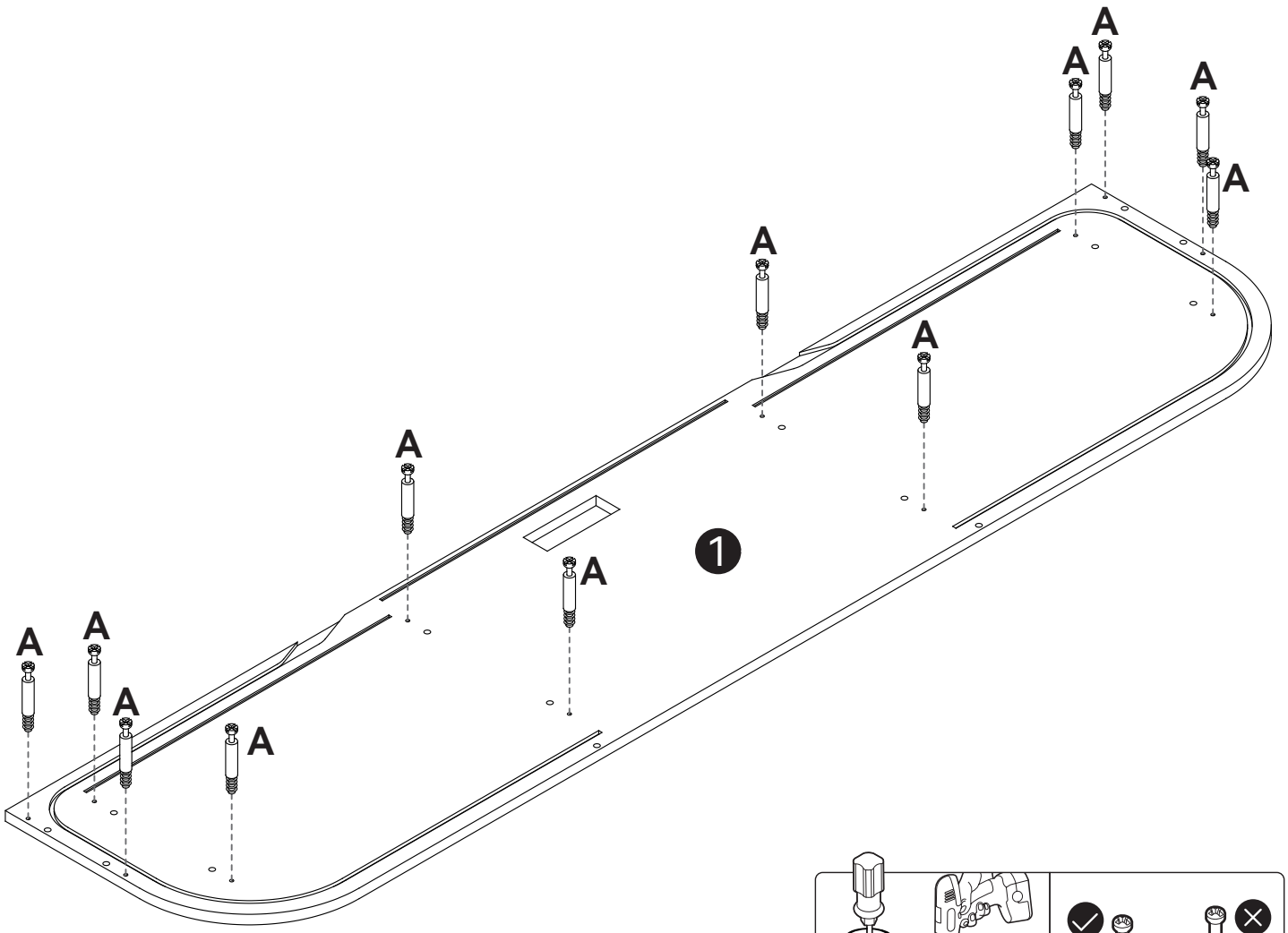

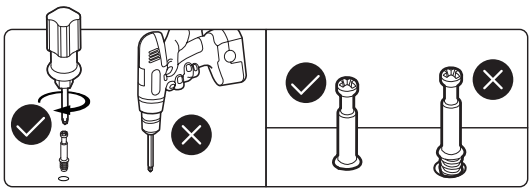

4

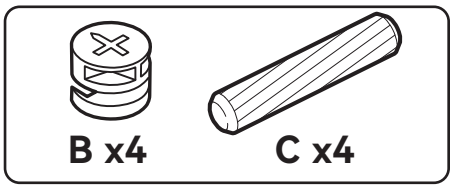

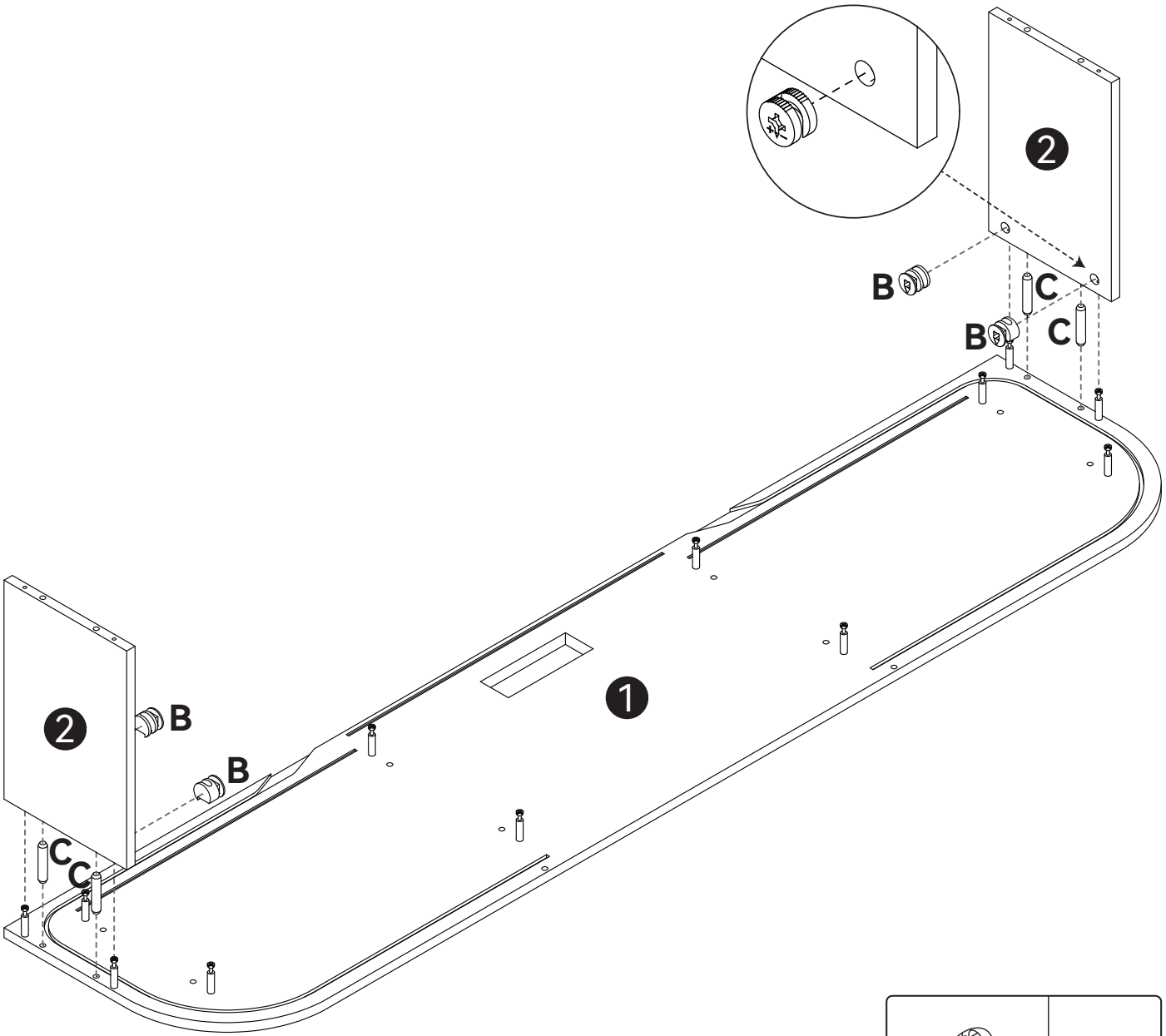

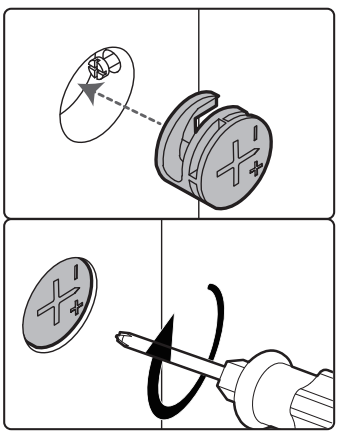

5

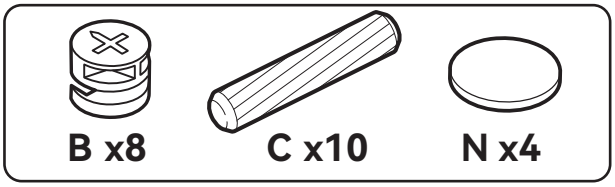

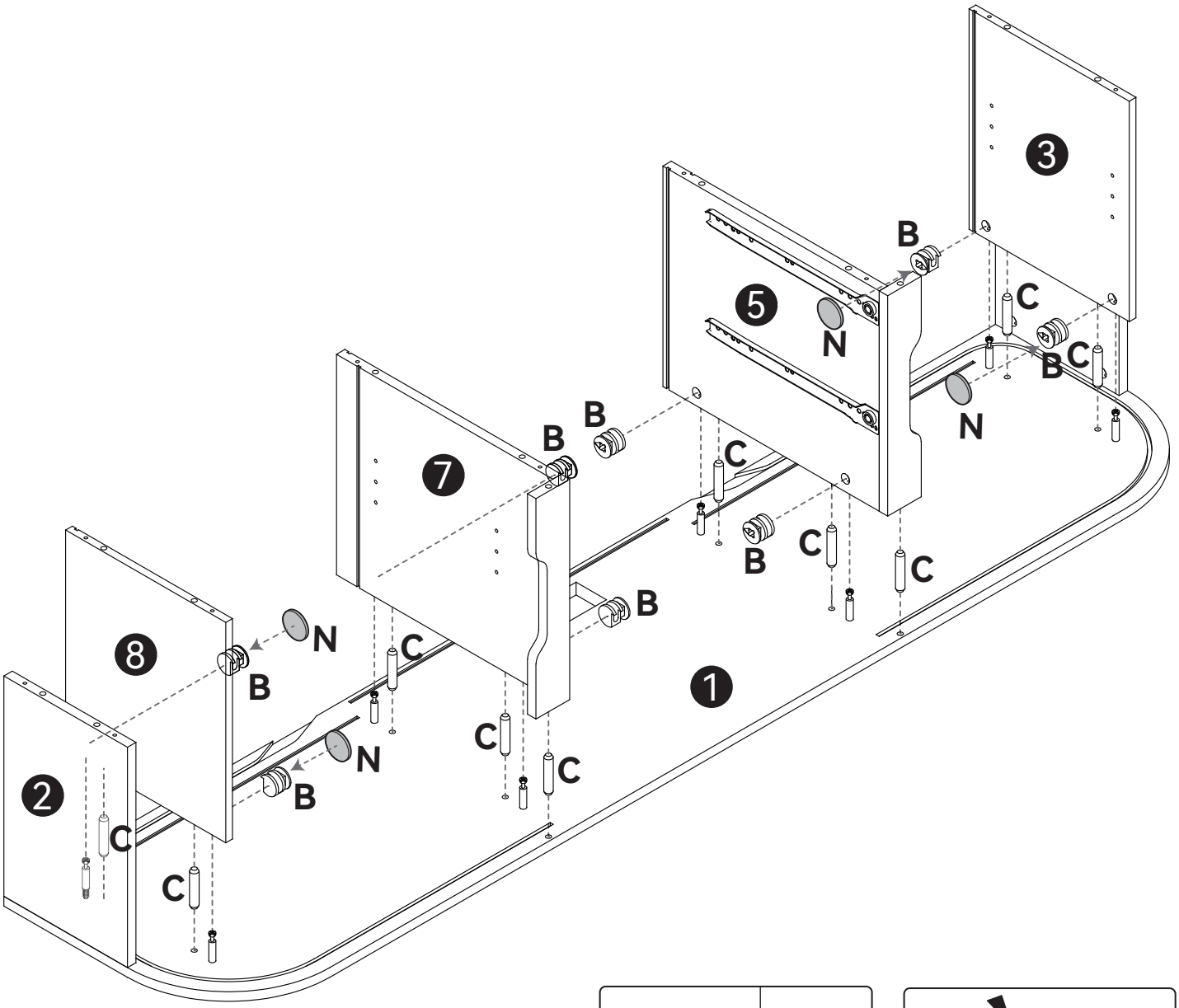

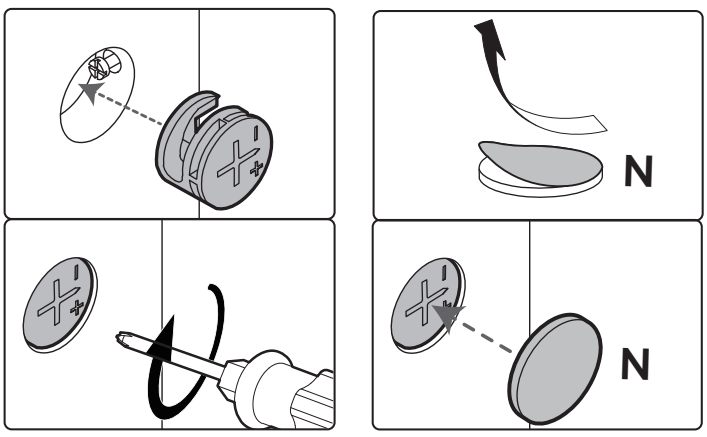

6

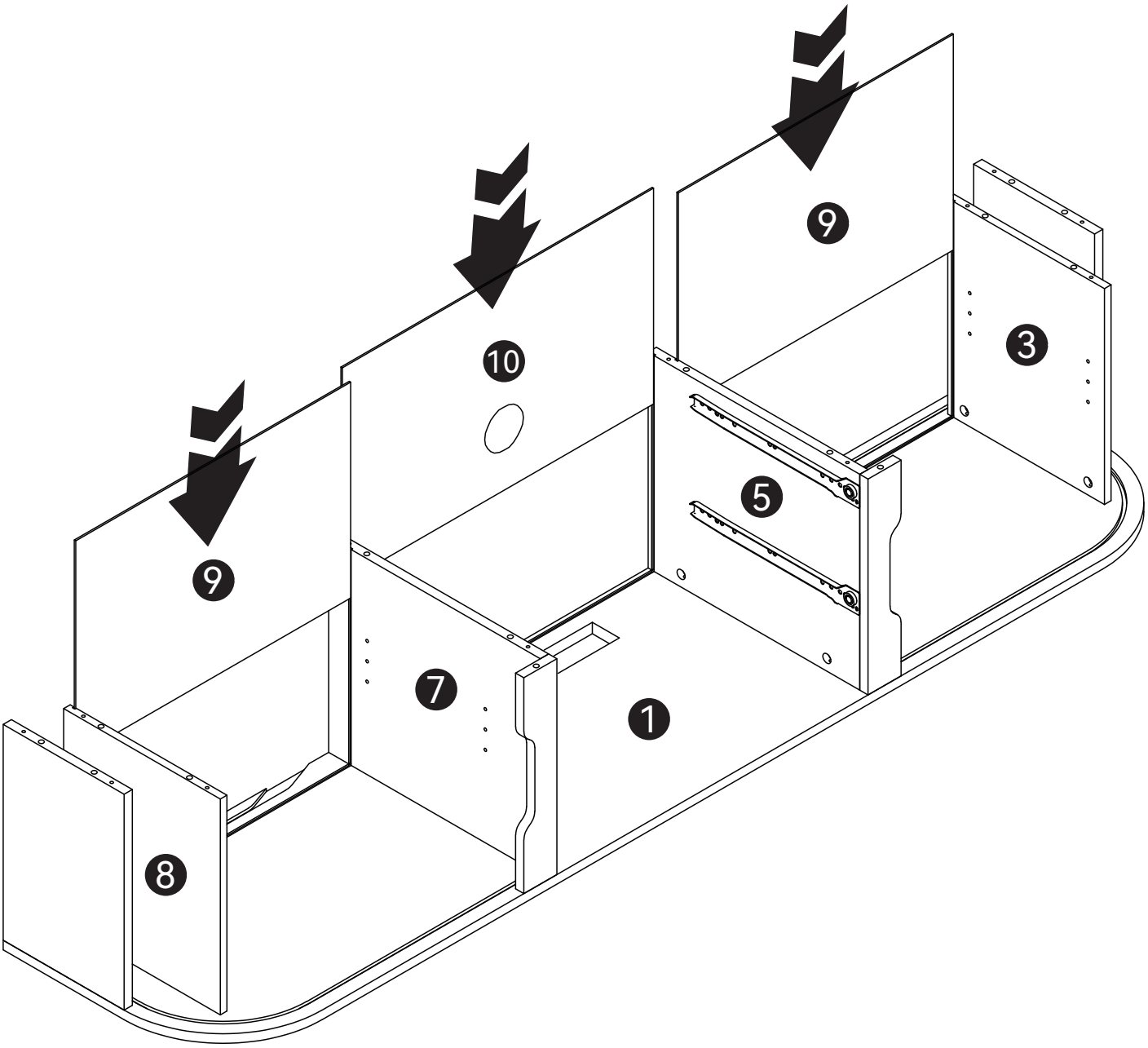

7

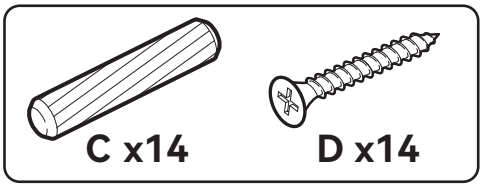

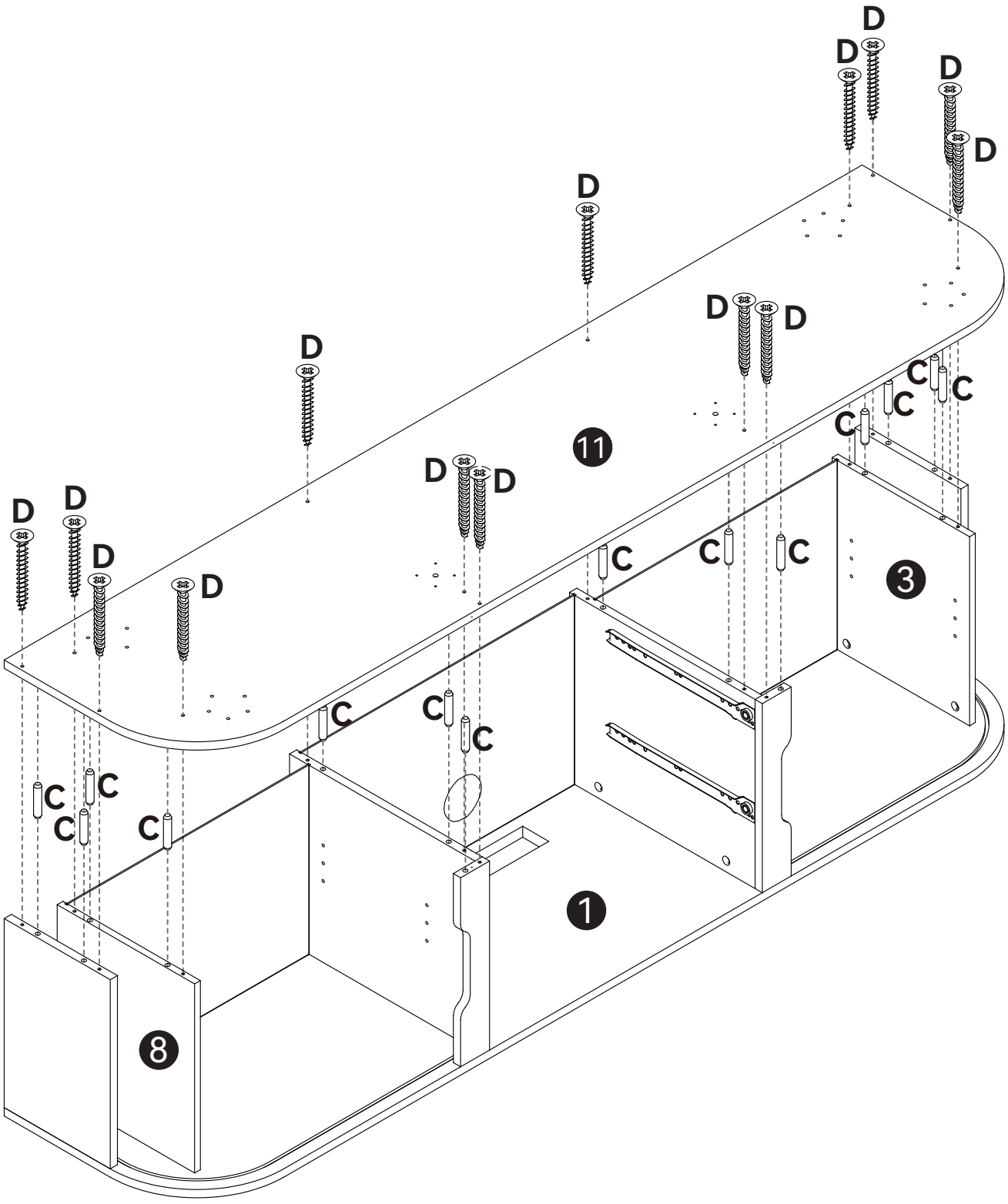

8

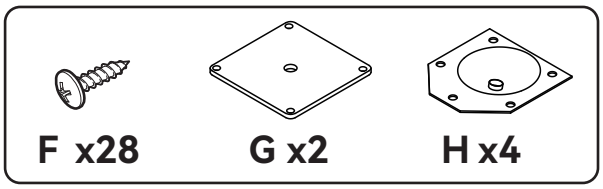

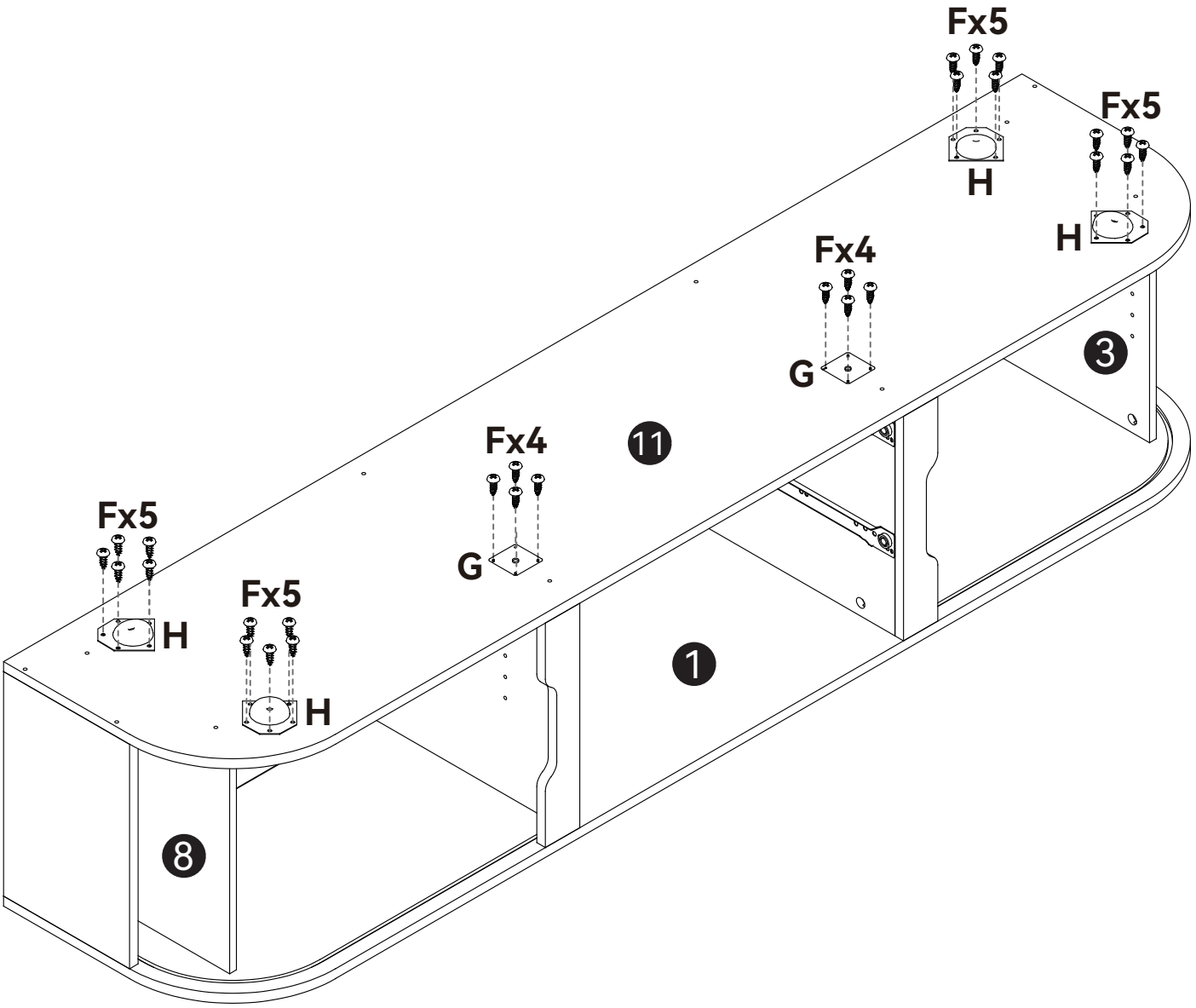

9

I x4

J x2

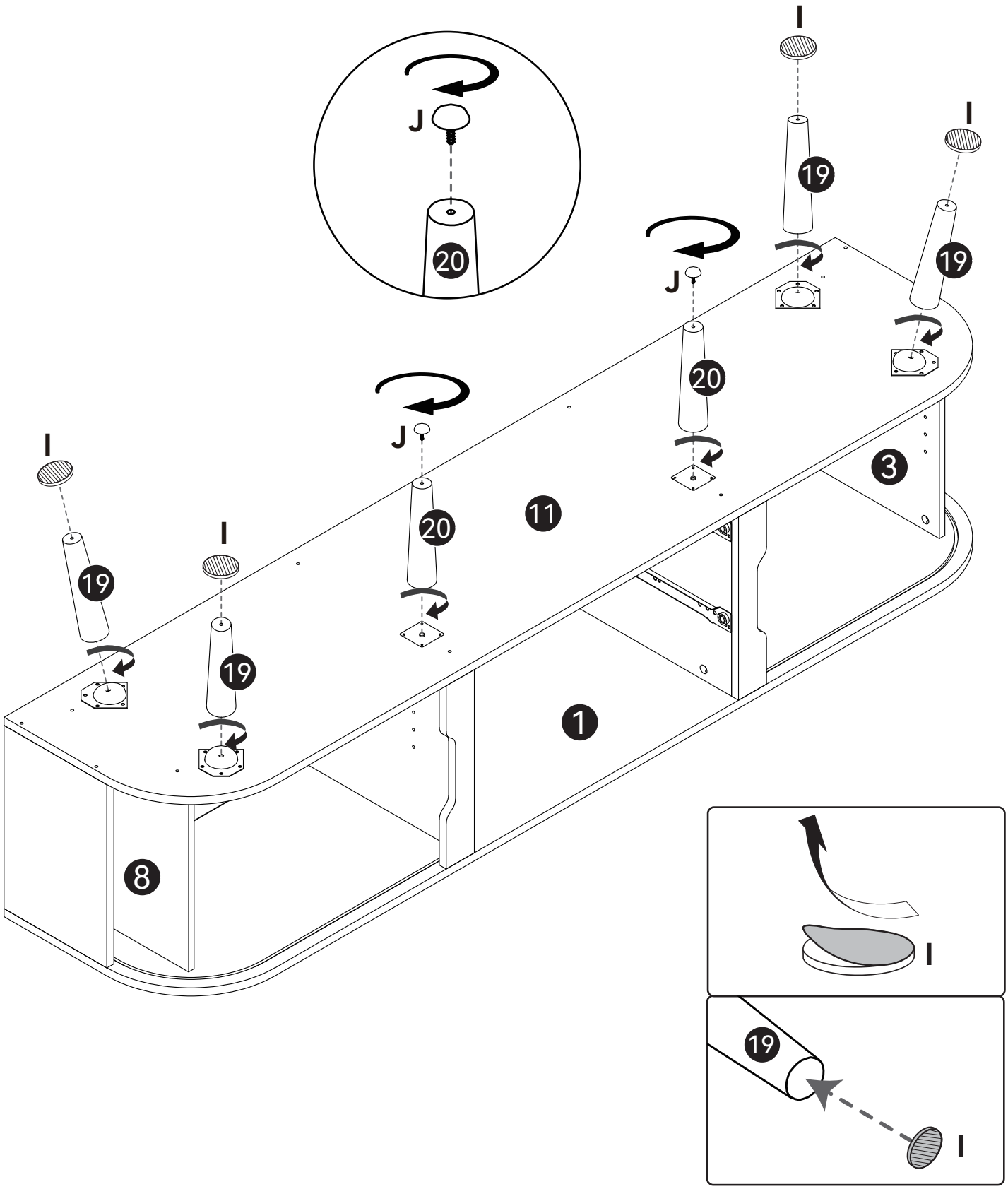

10

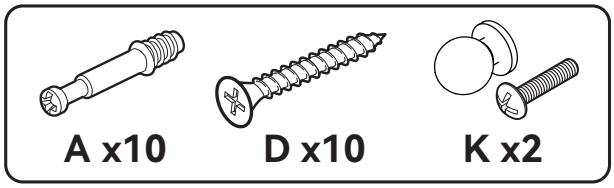

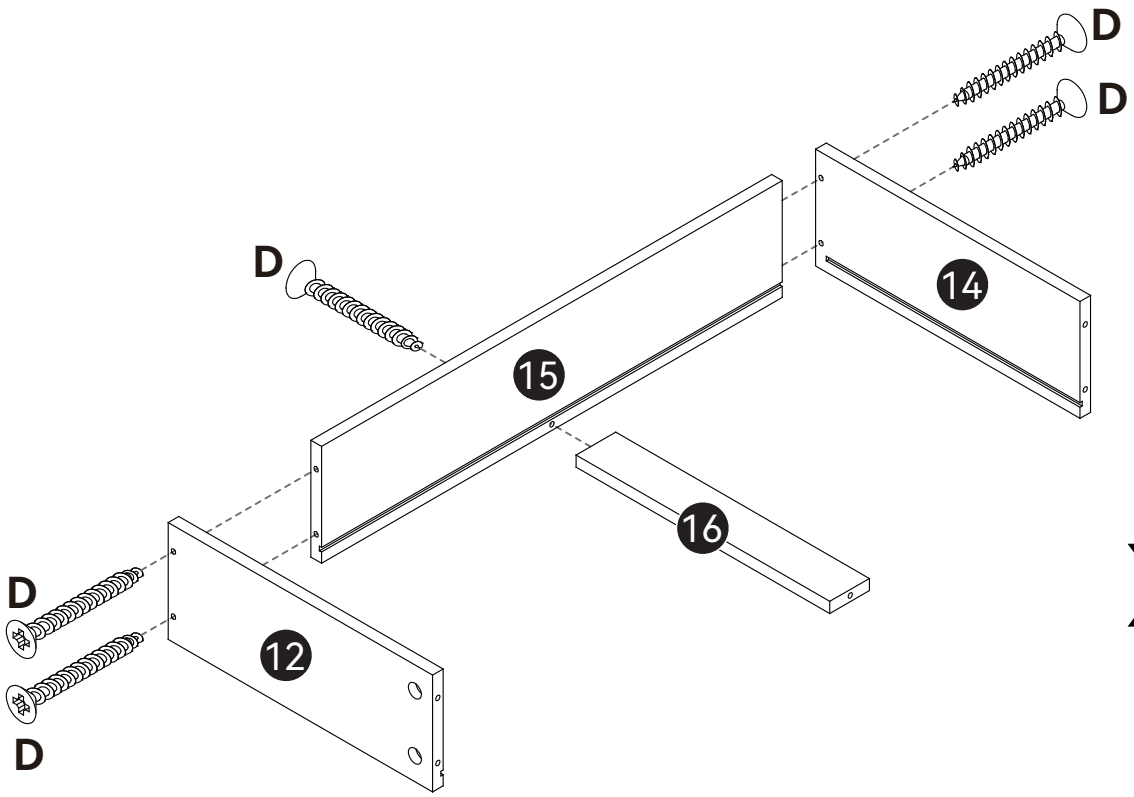

x2

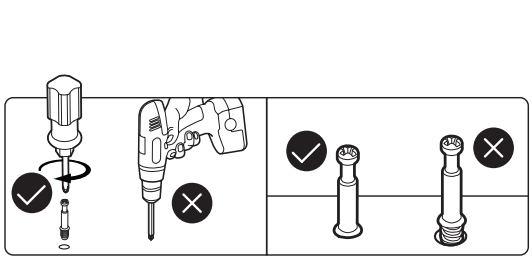

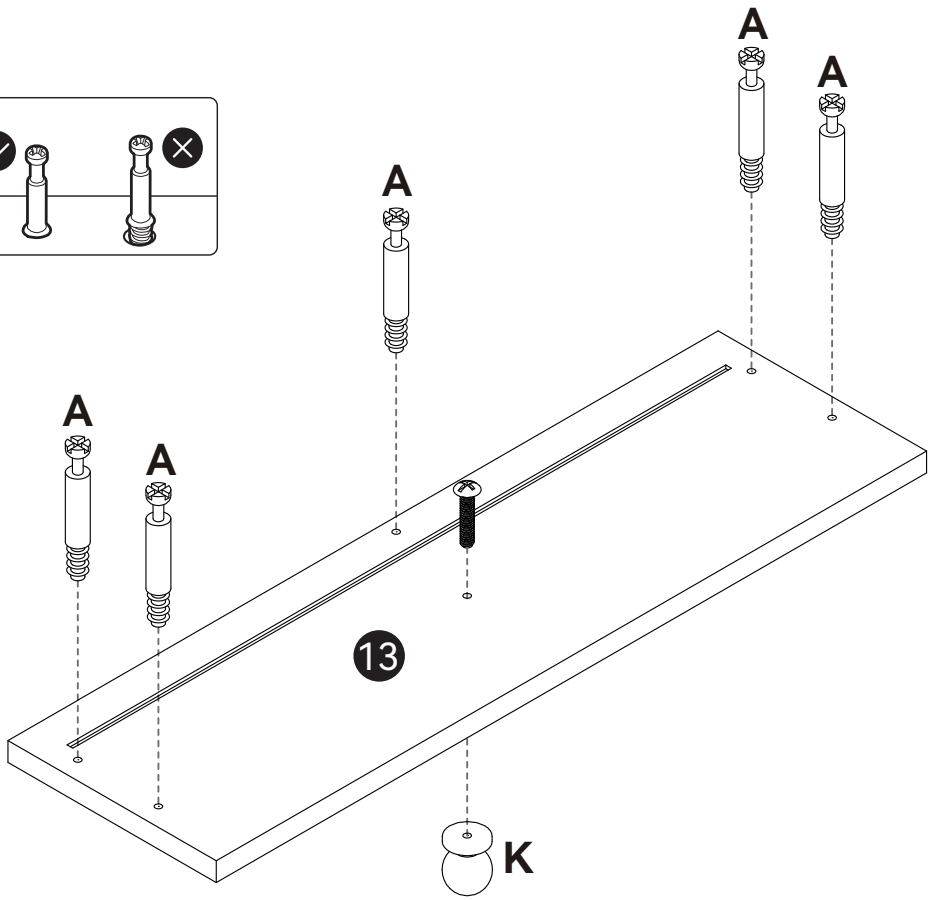

x2

11

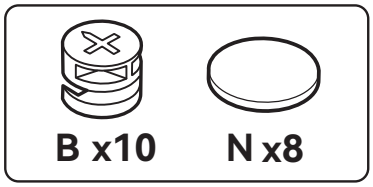

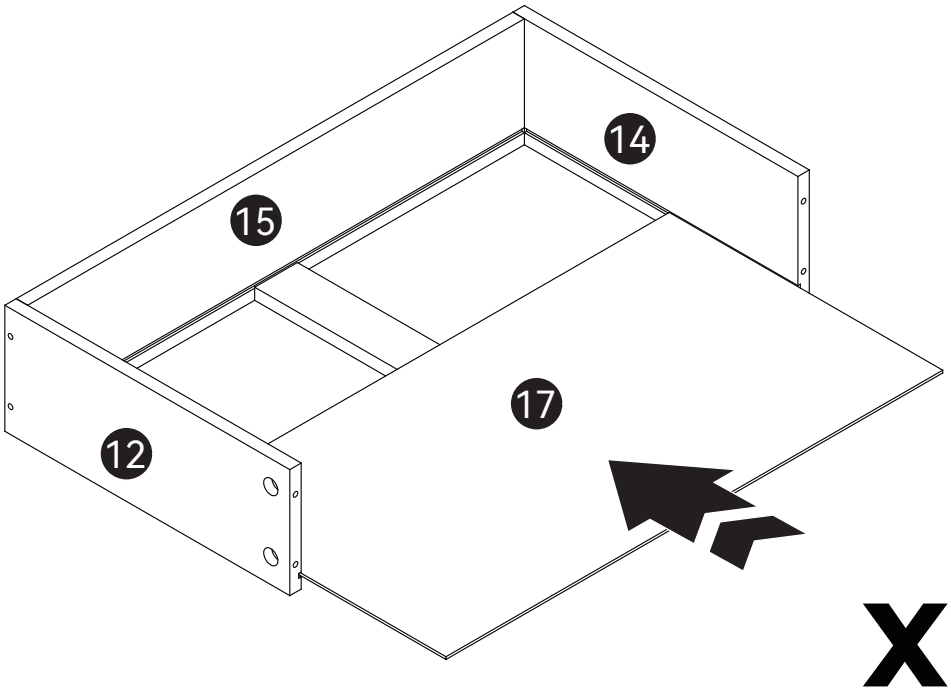

x2

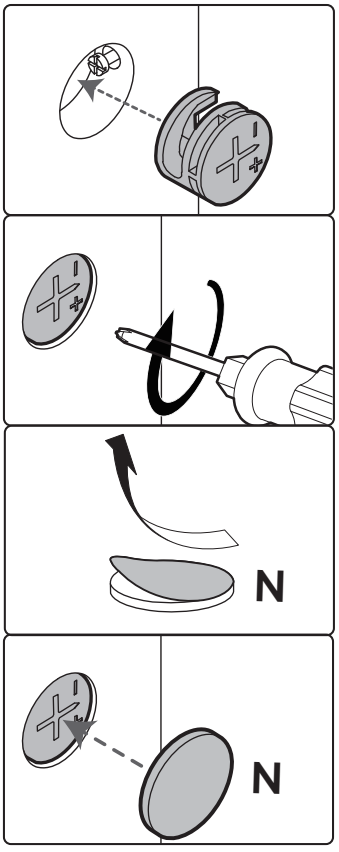

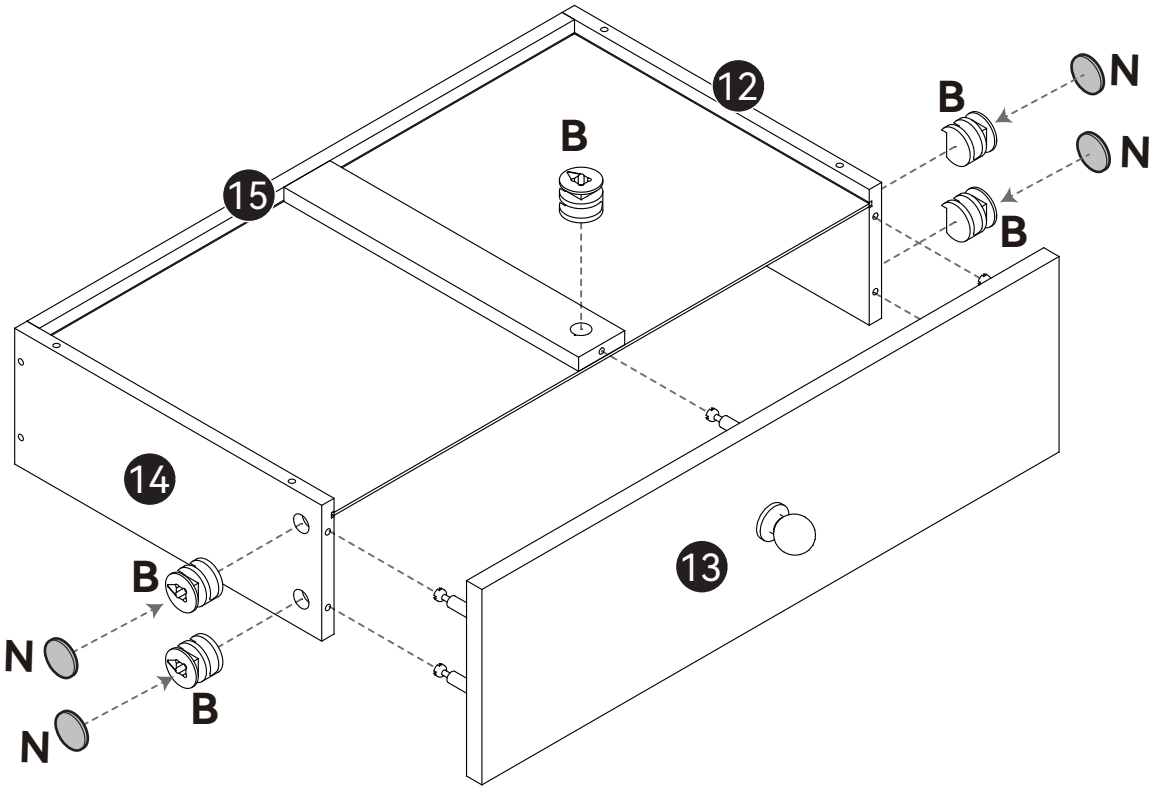

x2

12

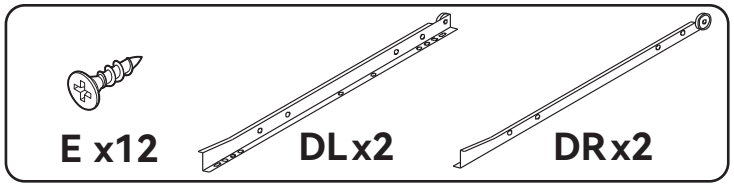

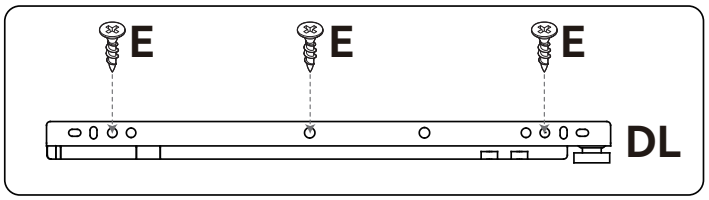

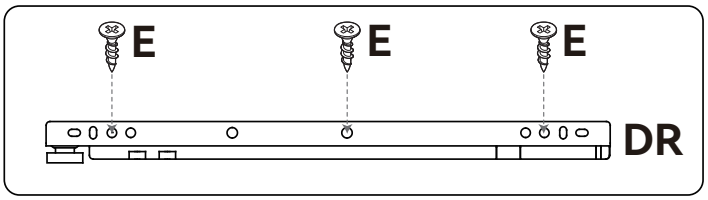

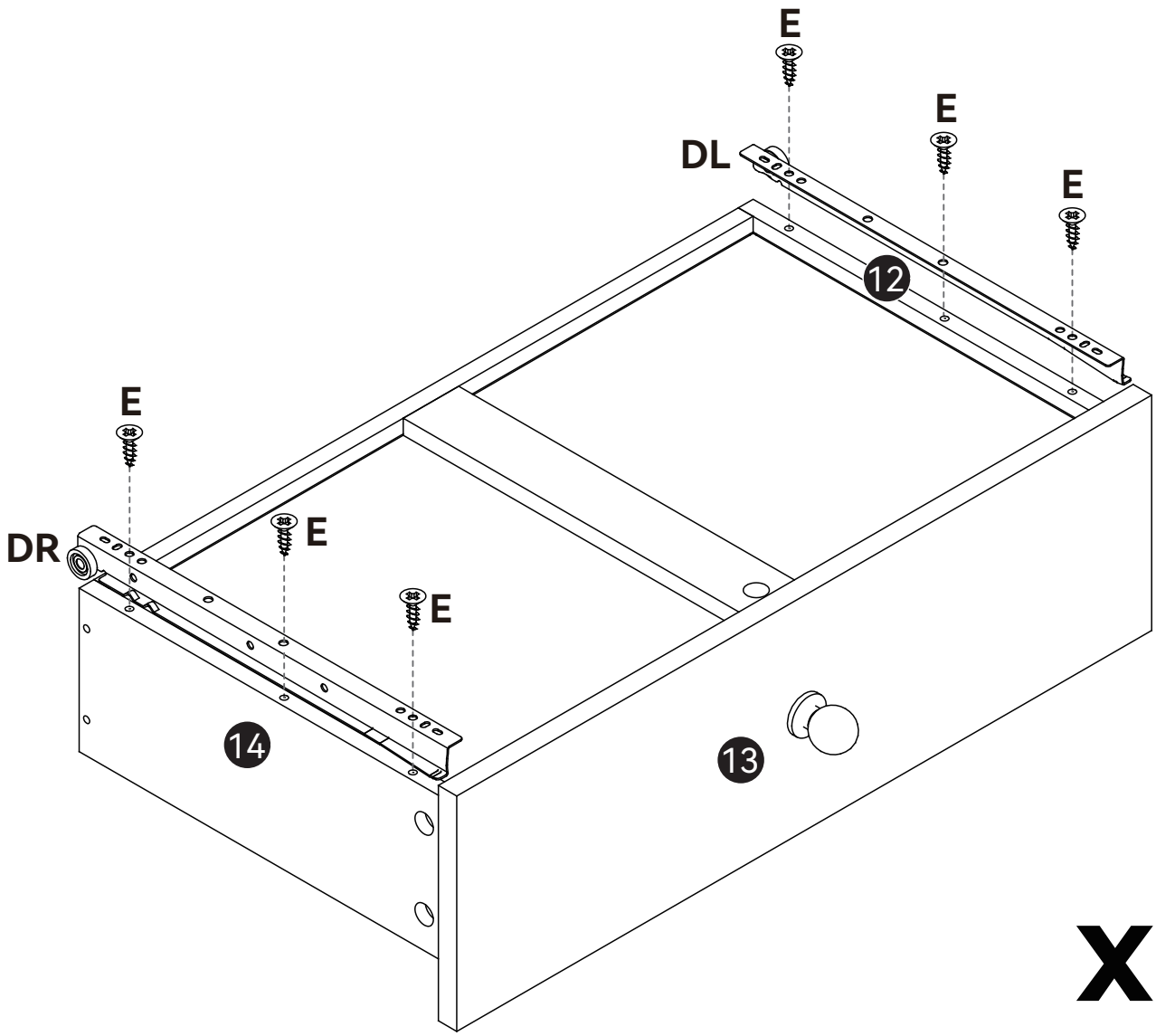

x2

13

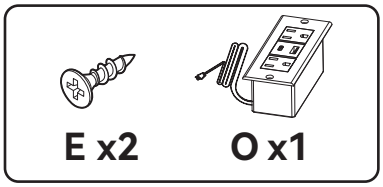

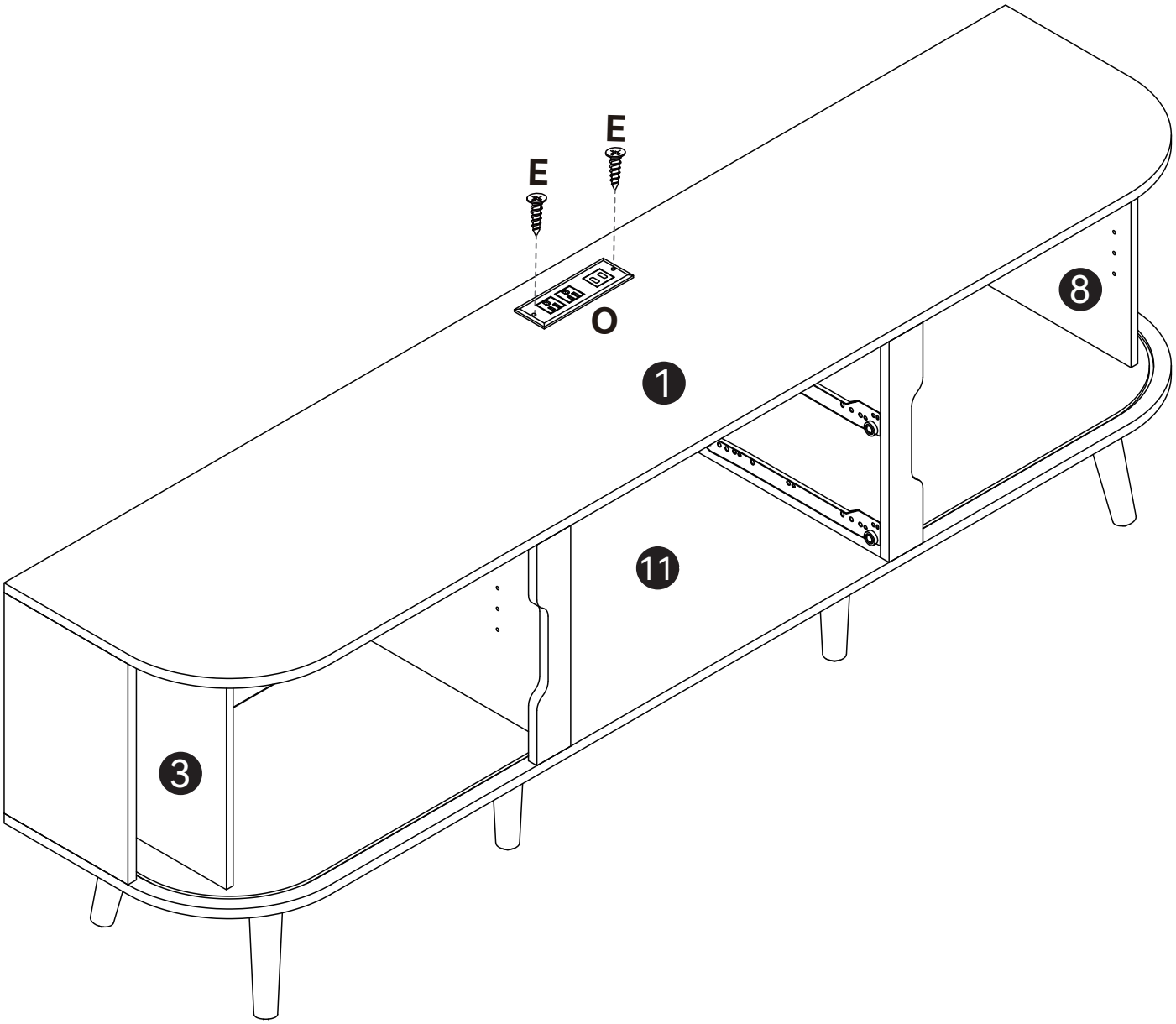

14

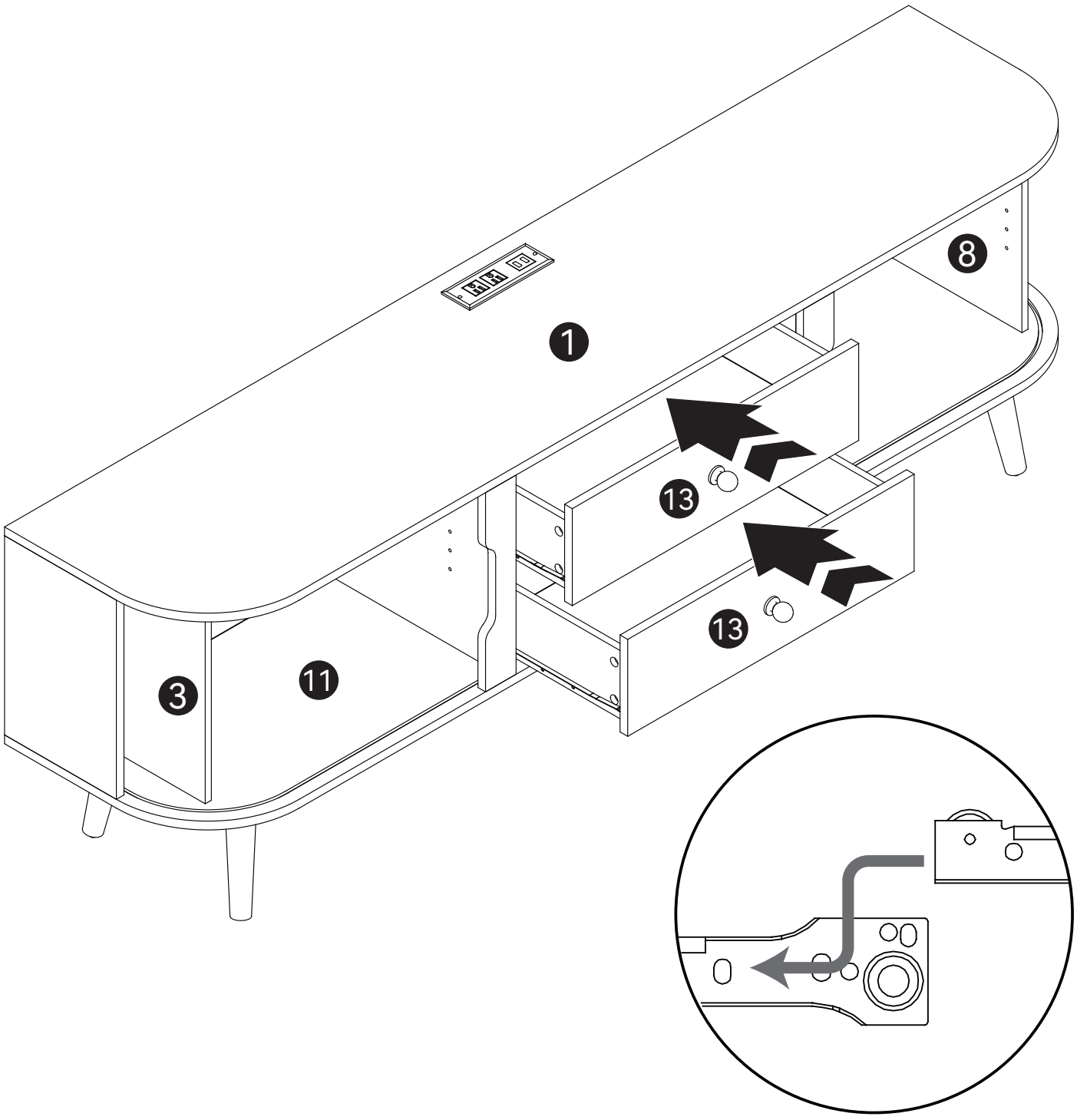

15

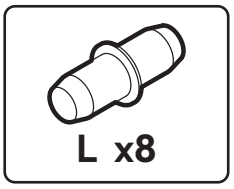

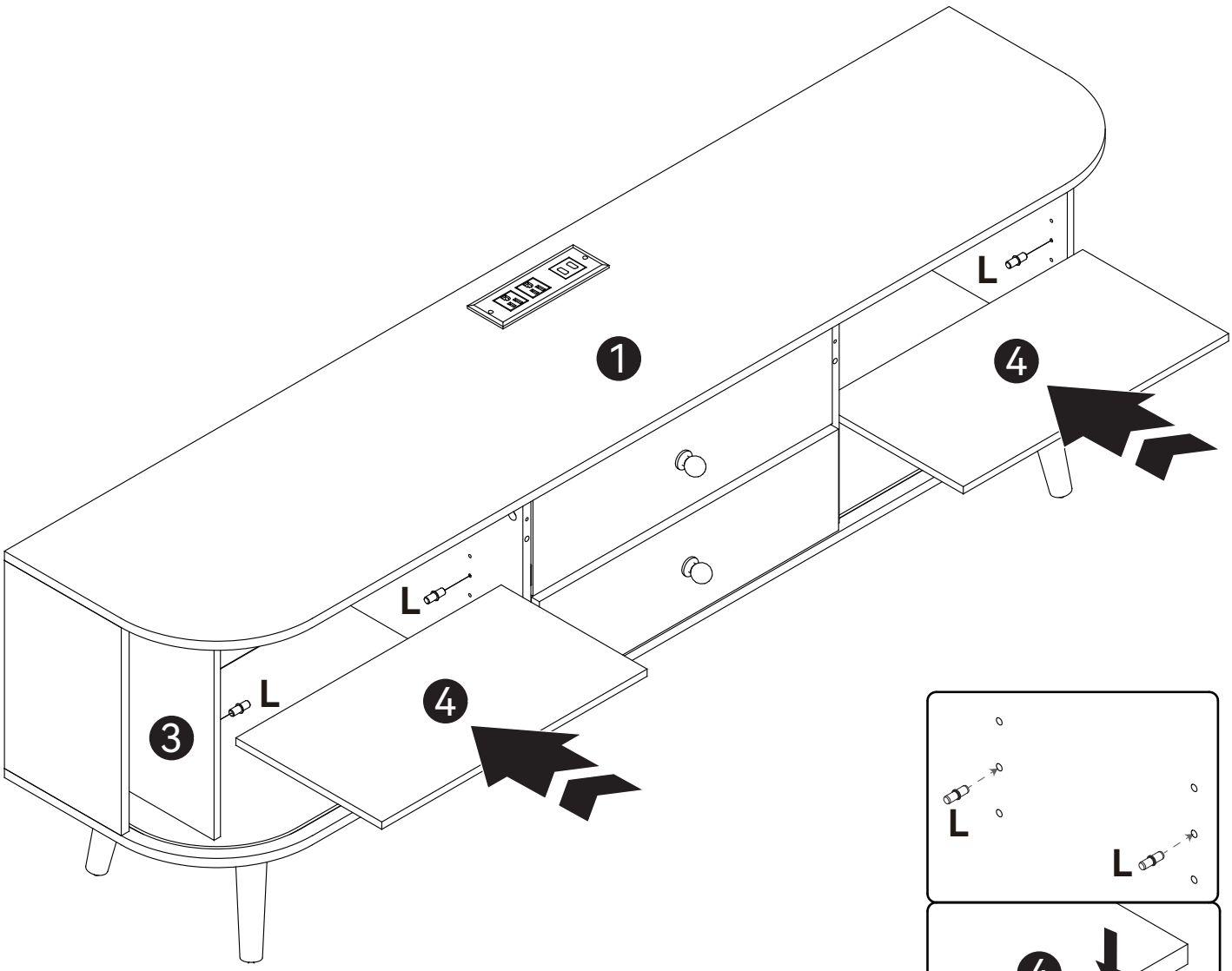

16

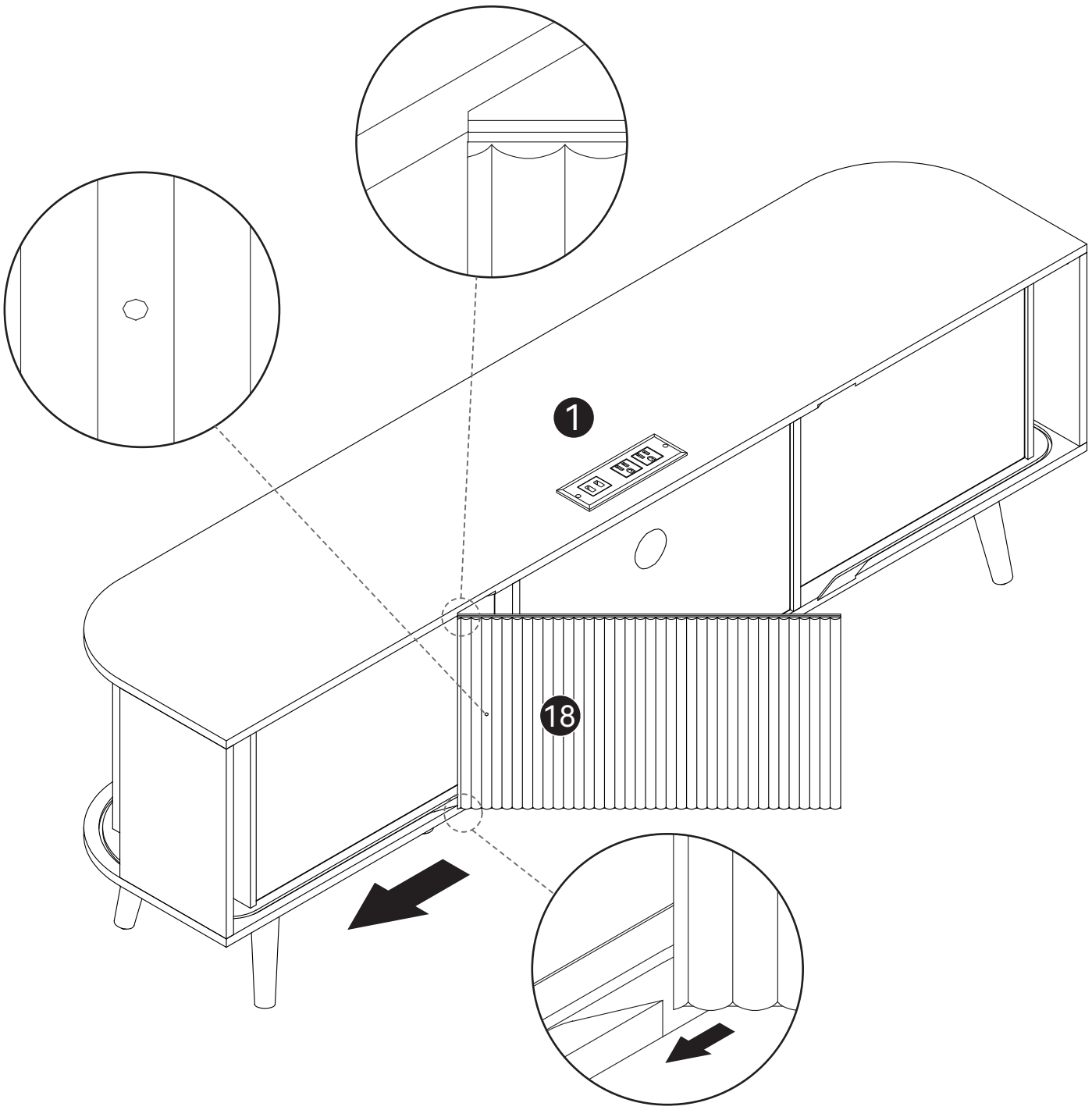

17

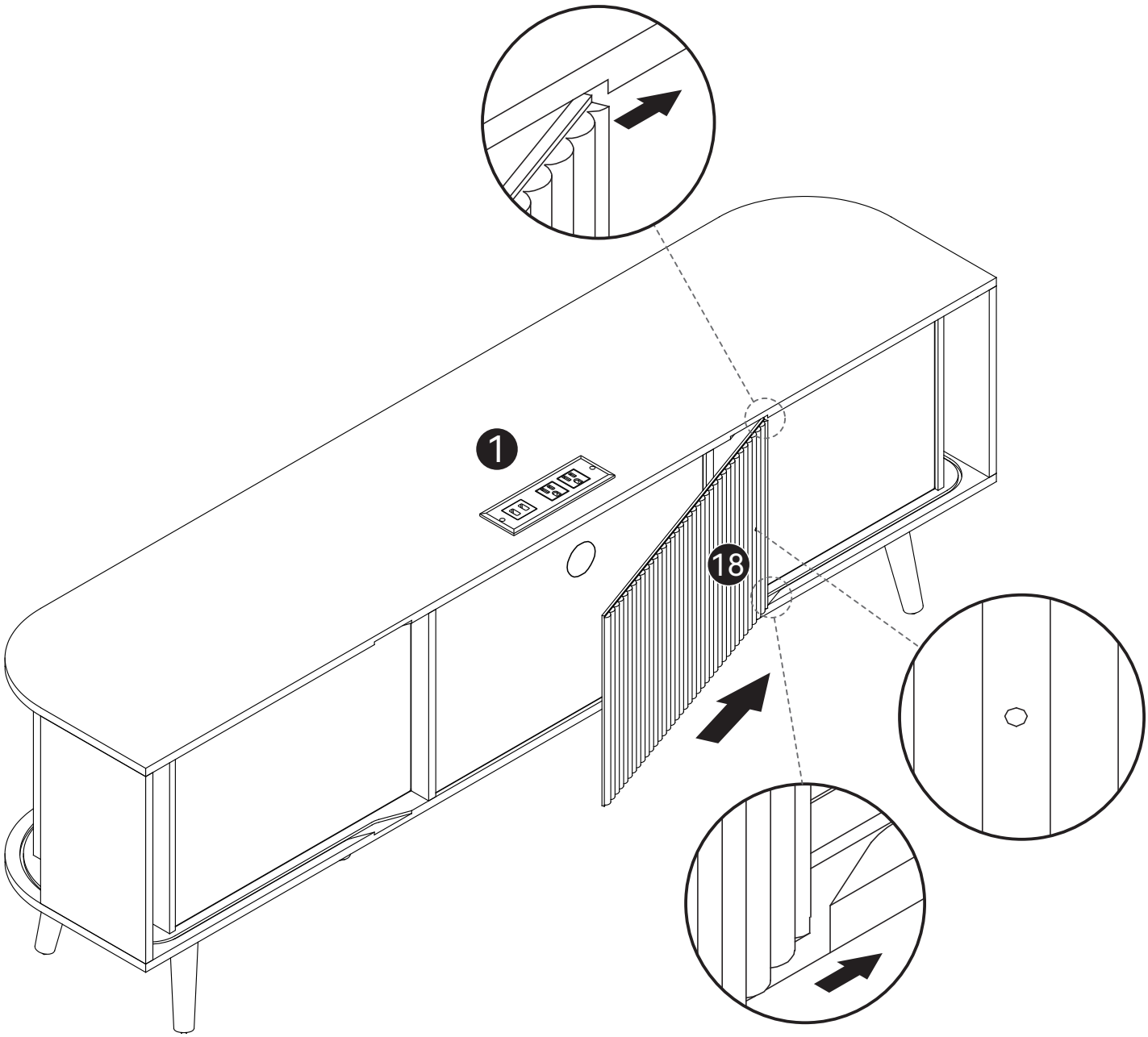

18

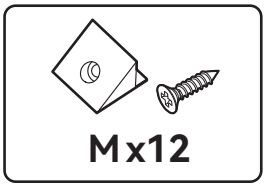

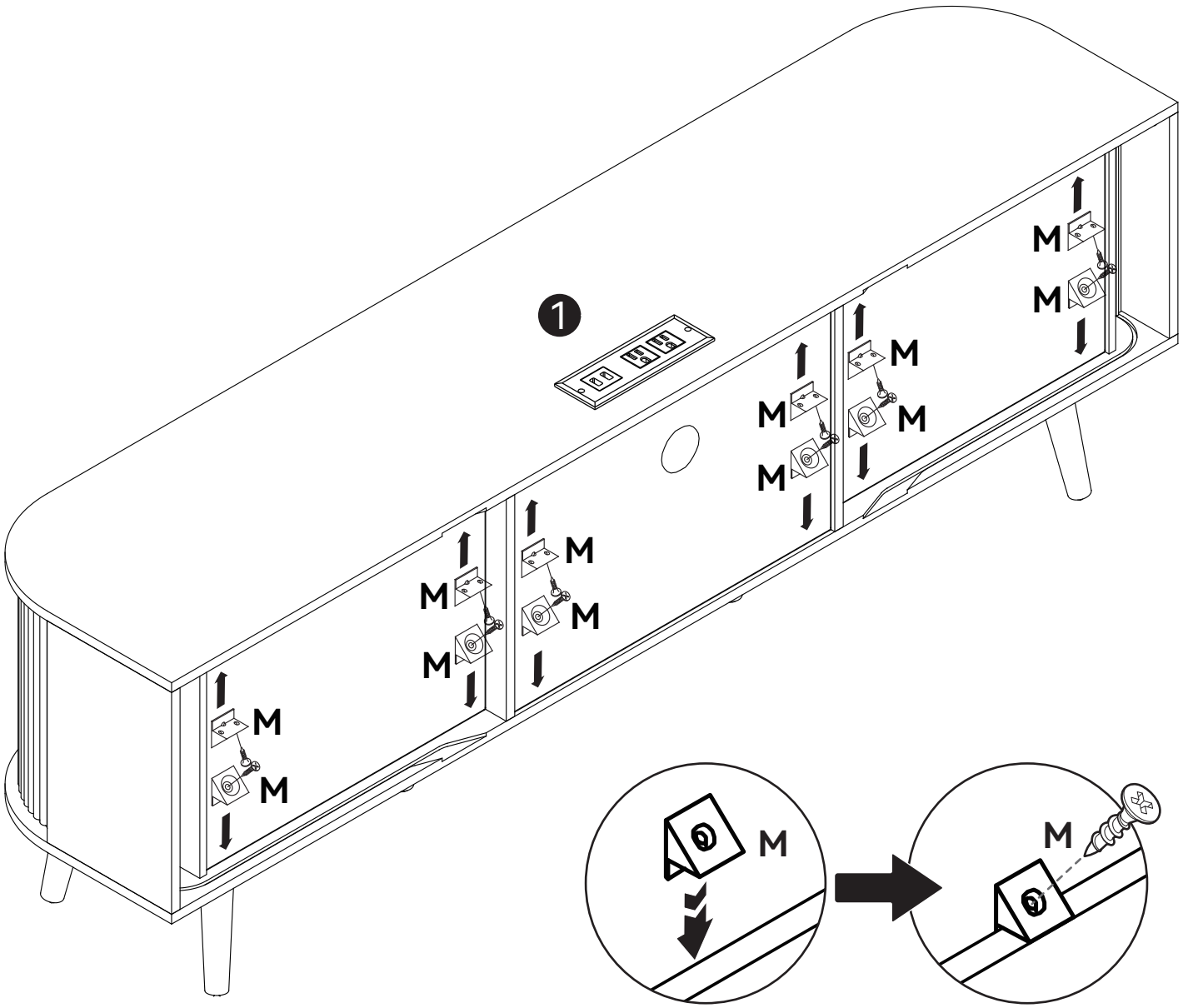

Insert back panel clip into gap.

Secure with screw.

19

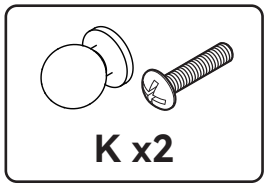

20

