ASSEMBLY INSTRUCTION

Model:Dining chair

Thank you for purchasing this quality product,be sure to check all thepacking materials carefully. When you received,please pay attention tothe products, which may cause deformed during the shipment.

step1:

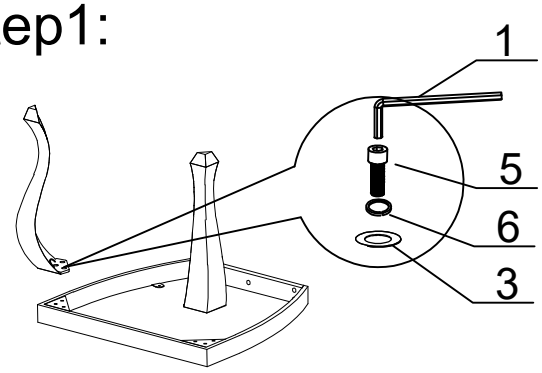

Connect the Chair frame (A) and Leg（C） with Screw

PART LIST

NO.	Designation	Quantity	Diagram
A	Chair frame	1	
B	Seat cushion	1	
C	Leg	2	
D	ChairBack	1	

HARDWARE LIST

NO.	Designation	Quantity	Size	Diagram
1	Allen key	1	M6	
2	Screw	8	M4*16	
3	Washer	11	Dia17	
4	Screw	5	M8*30	
5	Screw	6	M8*16	
6	**Spring washer**	11	Dia16	

step2:

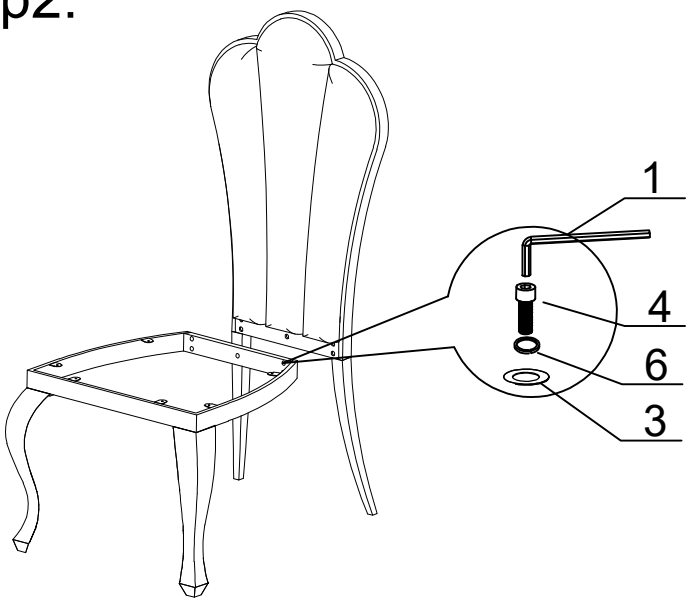

step3:

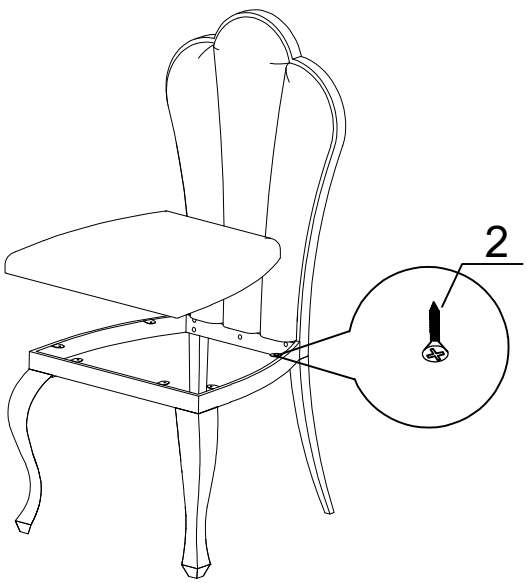

step4:

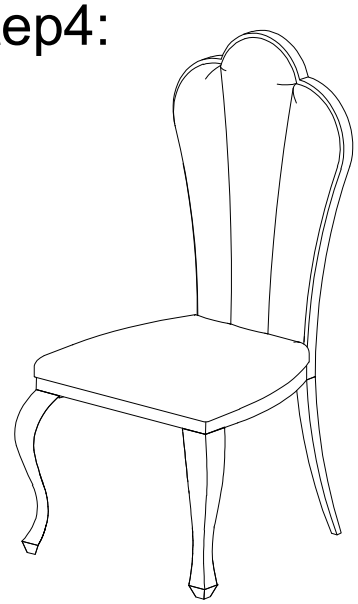

Finish