INSTRUCTION MANUAL

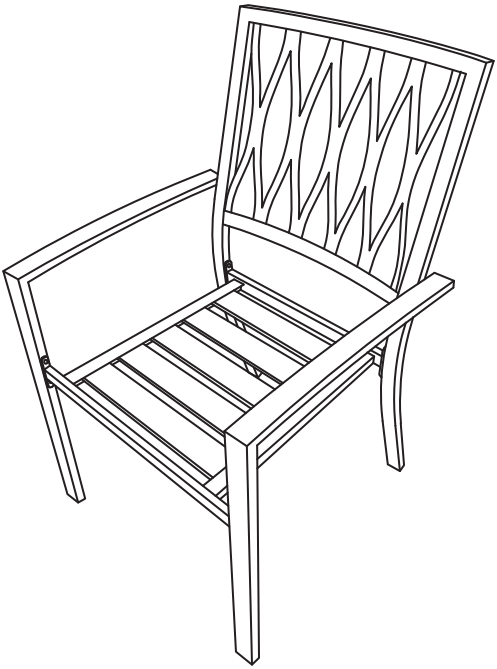

Iron Dining Chair

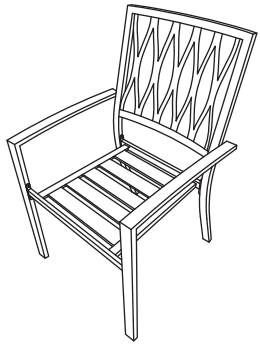

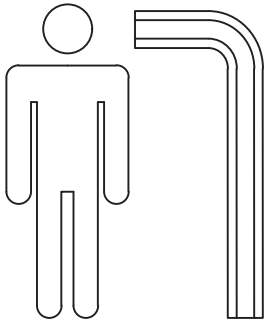

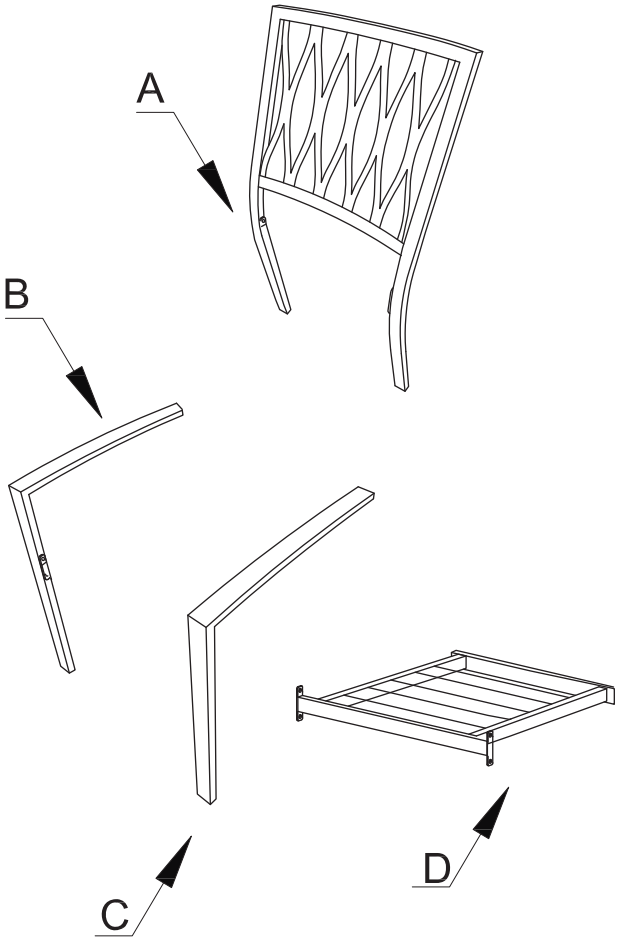

Part Number	Images and Sizes	Qty.
A		1
B	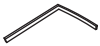	1
C	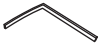	1
D		1
E	M6*15	10
F		1
G		2

ASSEMBLY INSTRUCTIONS

CAVEAT

Note: Please only tighten any bolts once all bolts place correctly and the product is lying flat.
If you tighten one bolt, it may cause other bolts to get out of position.

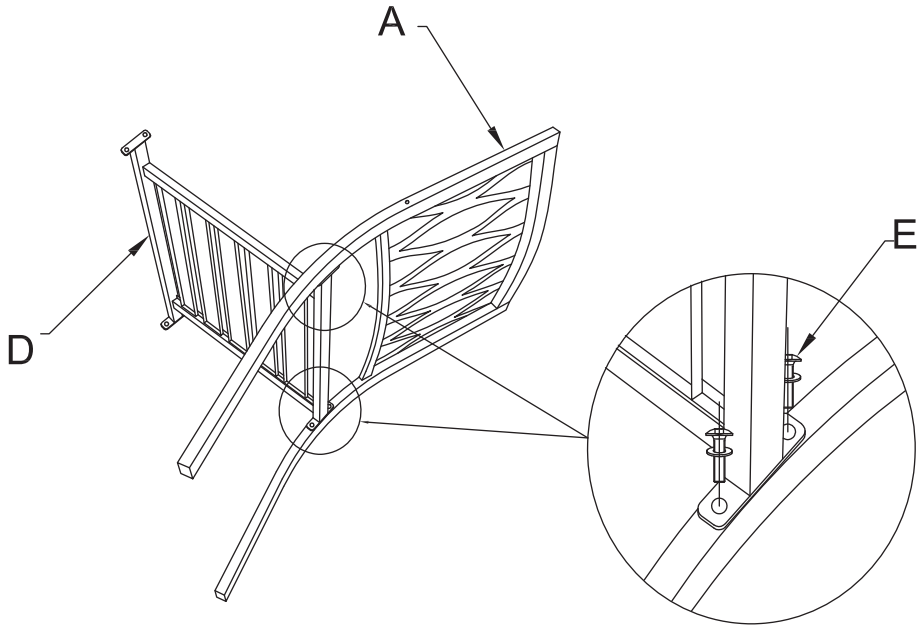

STEP 1

Attach seat frame (D) to back frame (A) using 4 bolts (E). Do not over-tighten them.

ASSEMBLY INSTRUCTIONS

CAVEAT

Note: Please only tighten any bolts once all bolts place correctly and the product is lying flat.
If you tighten one bolt, it may cause other bolts to get out of position.

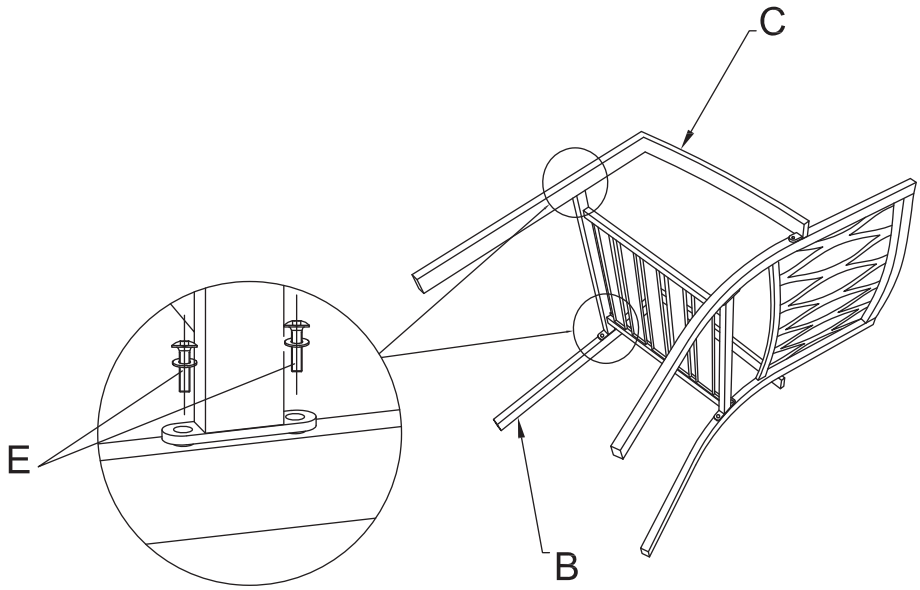

STEP 2

Attach seat frame (D) to armrests (B&C) using 4 bolts (E). Do not over-tighten them.

ASSEMBLY INSTRUCTIONS

CAVEAT

Note: Please only tighten any bolts once all bolts place correctly and the product is lying flat.
If you tighten one bolt, it may cause other bolts to get out of position.

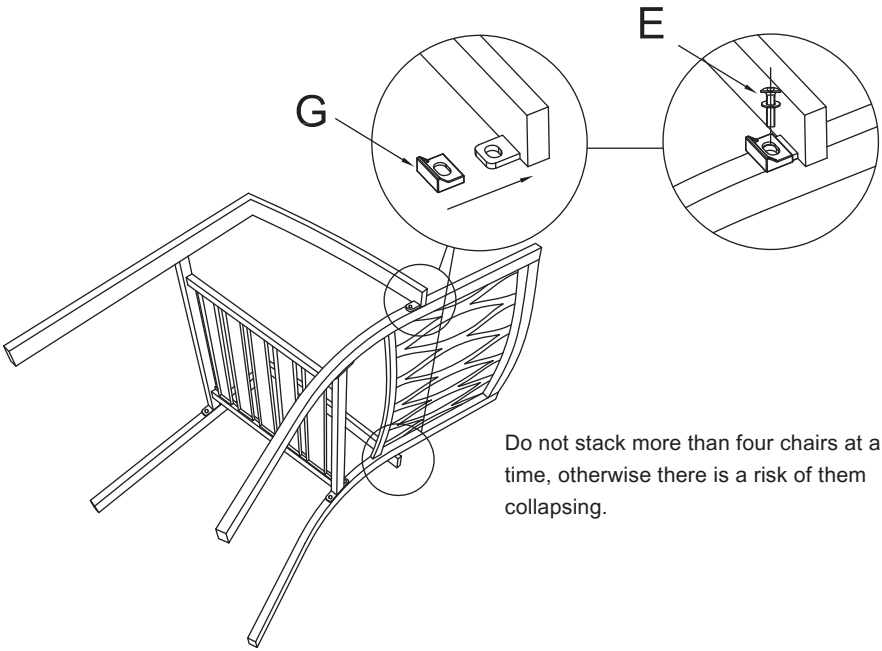

Do not stack more than four chairs at a time, otherwise there is a risk of them collapsing.

STEP 3

Attach armrests (B&C) to back frame (A) using 2 bolts (E) and 2 plastic protective cases (G). Do not over-tighten them.
Upon completing the entire assembly and bolting up, you can tighten down all screws.

CARE AND MAINTENANCE

Follow the instructions for the product's material to ensure it stays in the best shape as long as possible. The information below is a general guideline. Don't hesitate to get in touch with us to learn more.

• Only rinse it thoroughly with clean water to wash away dirt and grime. Never use abrasive cleansers on the furniture since they can attack the surface and leave behind scratch marks.

• For stubborn grime and stains, use a soft sponge and mild soapy water. Then dry it with a cloth or paper towel.

• Check the stability of the screws, nuts, and nut caps before each use. Then, tighten them up after one to two months' use whenever required.

• Avoid improper use, and be careful not to scratch or damage the surface with sharp objects.

• When you move your furniture, lift it rather than pulling or pushing it to avoid damaging the floor, legs, and mounting.