PE Rattan Furniture Set
Assembly Instructions

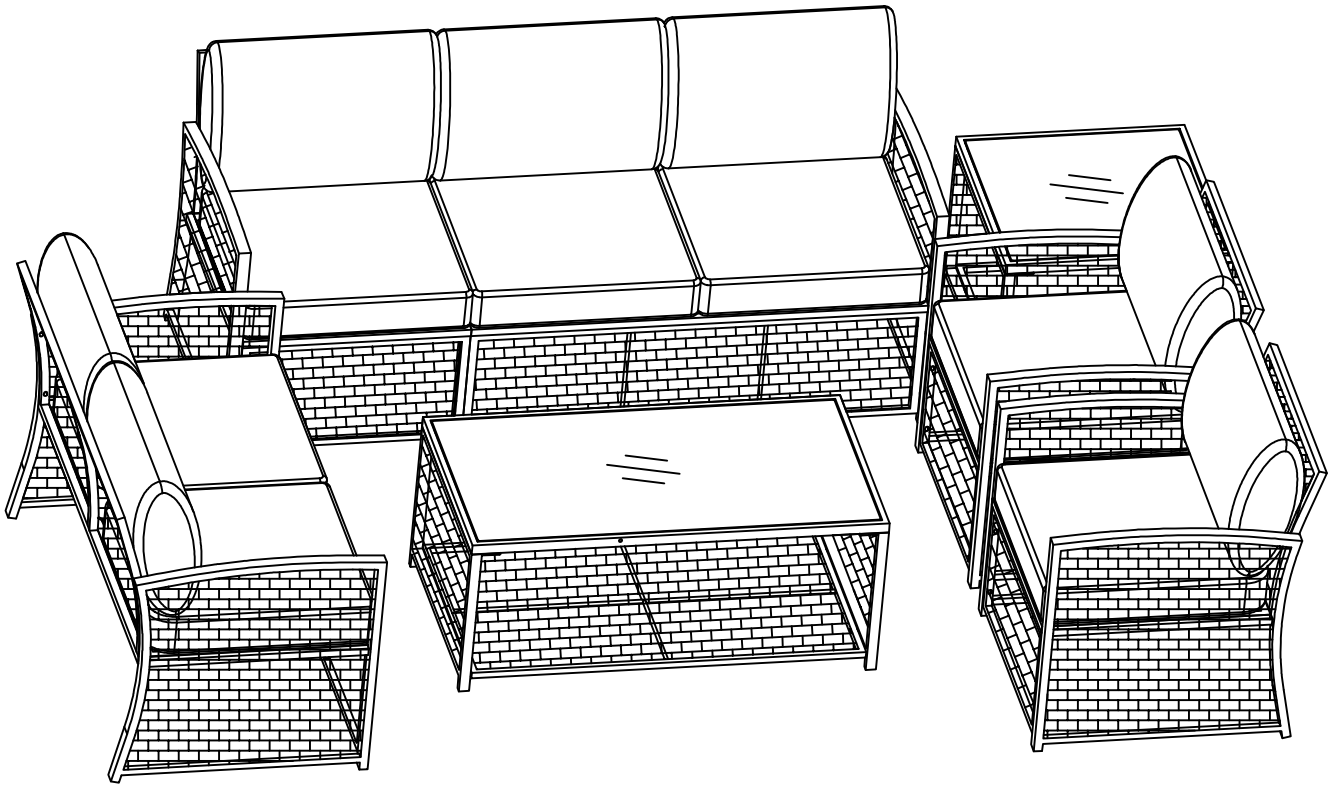

Attention

Thanks for choosing our product.

1.There will be two boxes in total for this whole product. Before assembling, please check you receive all the parts listed below. If there is any missing or damaged part, or if you have any question, please feel free to contact our service team for help.

2.Two persons are recommended to assemble the set.

3.Recommend to use waterproof furniture cover for entire furniture set when it is used outdoor to keep them longer lifetime.

4.Sofa cushion covers can be removed and cleaned up by cleaner when there are stains.

Package A Parts List

Ⓒ x4 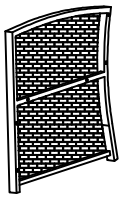	Ⓓ x4 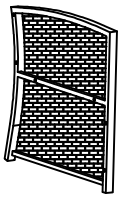	Ⓔ x3 
Ⓚ x1 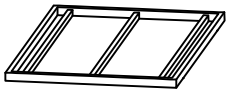	Ⓜ x2 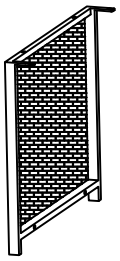	Ⓝ x1 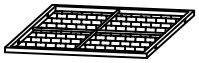
Ⓞ x1 	Ⓟ x3 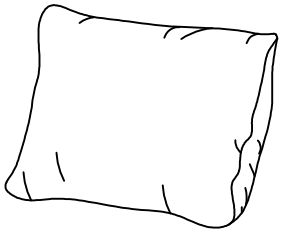	Ⓠ x7 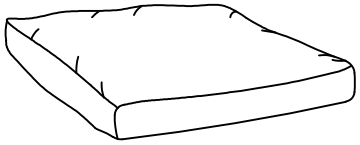
Ⓥ x105  M6	Ⓧ x1 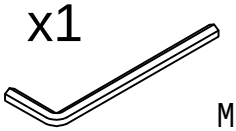 M6	Ⓩ x3 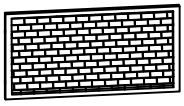
Ⓦ x6  M6	Ⓨ x1 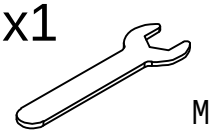 M6	
Ⓡ x8  M6*20	Ⓢ x85  M6*35	Ⓣ x6 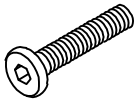 M6*55

Package B Parts List

Ⓐ x2 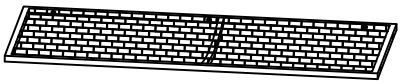	Ⓑ x2 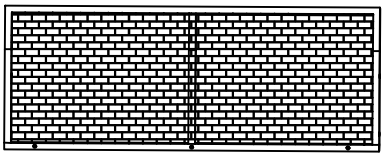	Ⓕ x3 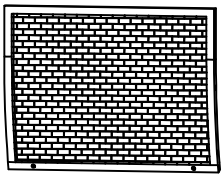
Ⓖ x1 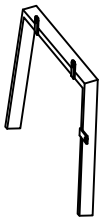	Ⓗ x1 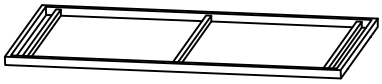	Ⓘ x2 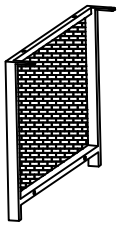
Ⓙ x1 	Ⓛ x1 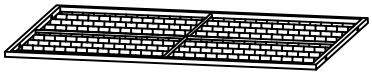	Ⓟ x4 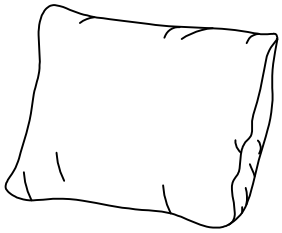
Ⓤ x2 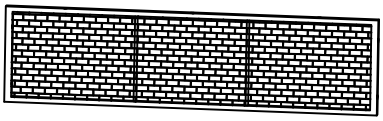	ⓐⓐ x4 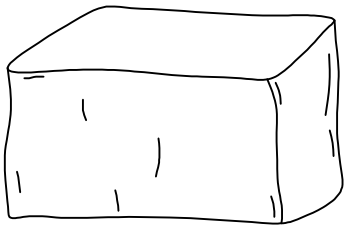	

STEP 1

S	x2
	
	M6*35
V	x2
	
	M6

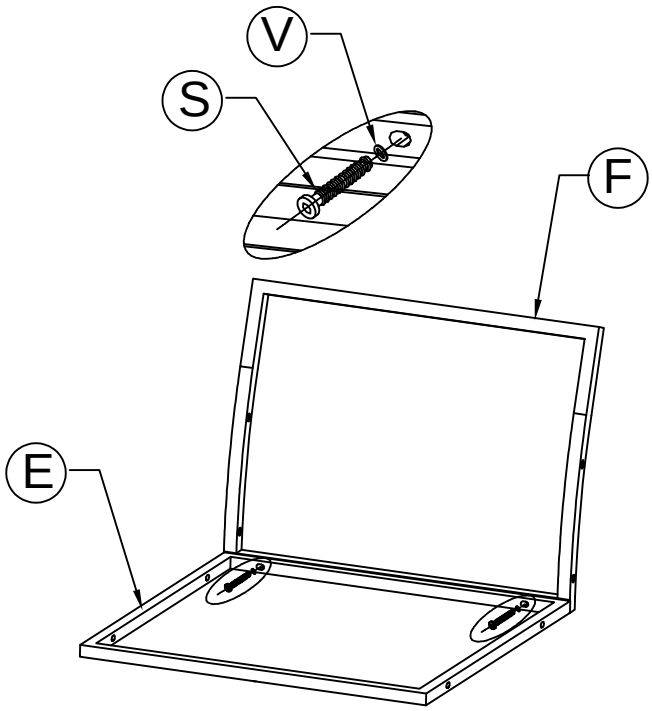

STEP 2

S	x4
	
	M6*35
V	x4
	
	M6

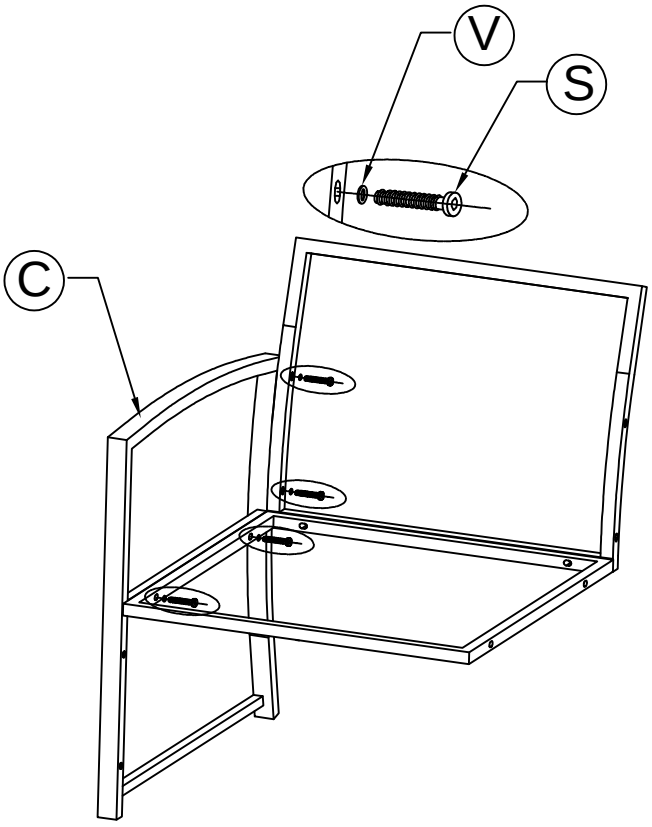

STEP 3

S	x4
	M6*35
V	x4
	M6

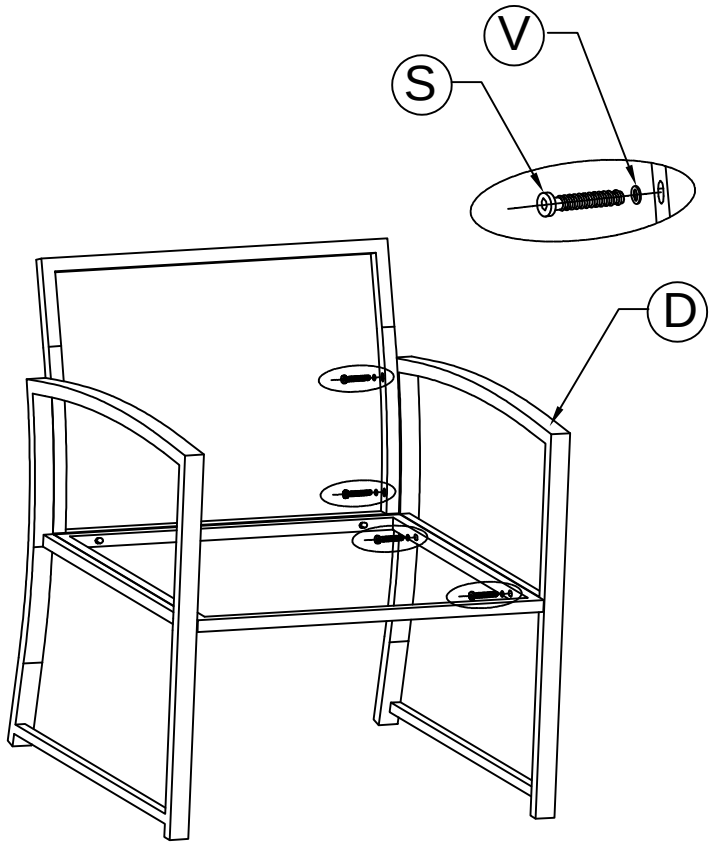

STEP 4

S	x5
	M6*35
V	x5
	M6

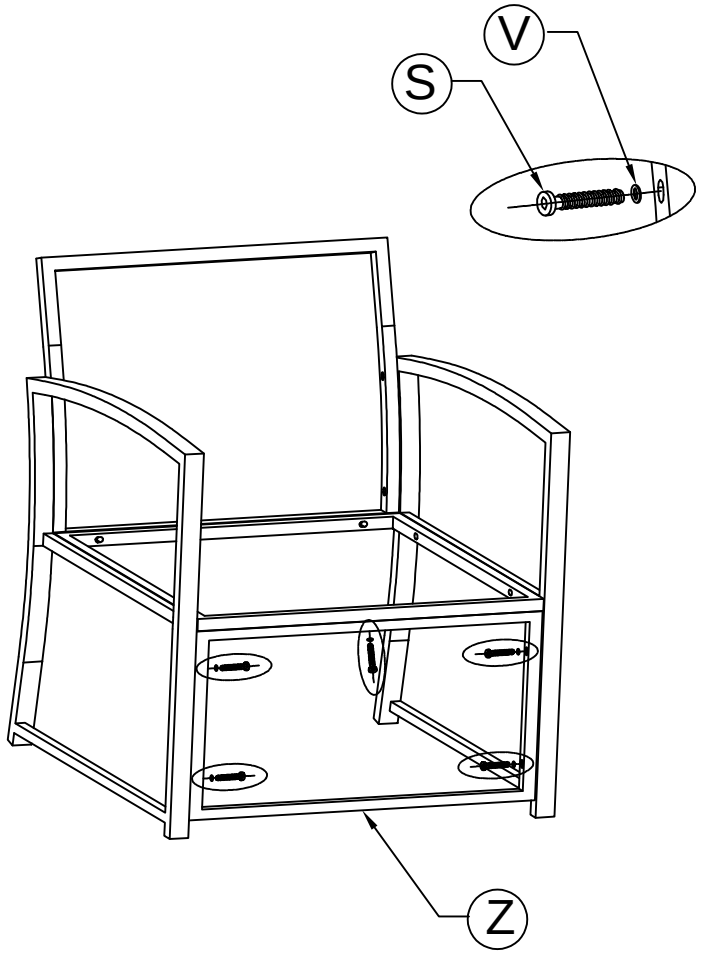

STEP 5

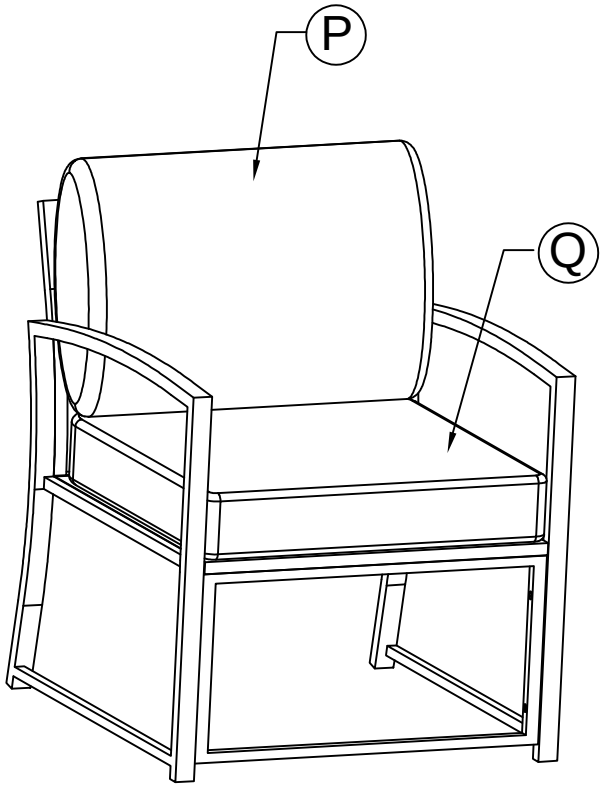

STEP 6

S	x3
	M6*35
V	x3
	M6

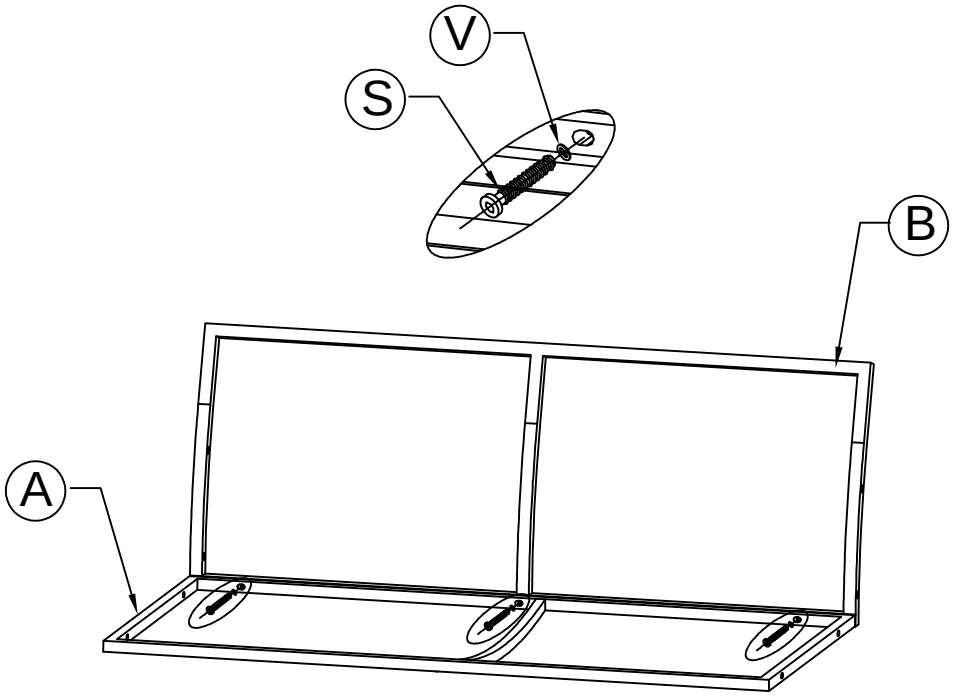

STEP 7

S	x4
	M6*35
V	x4
	M6

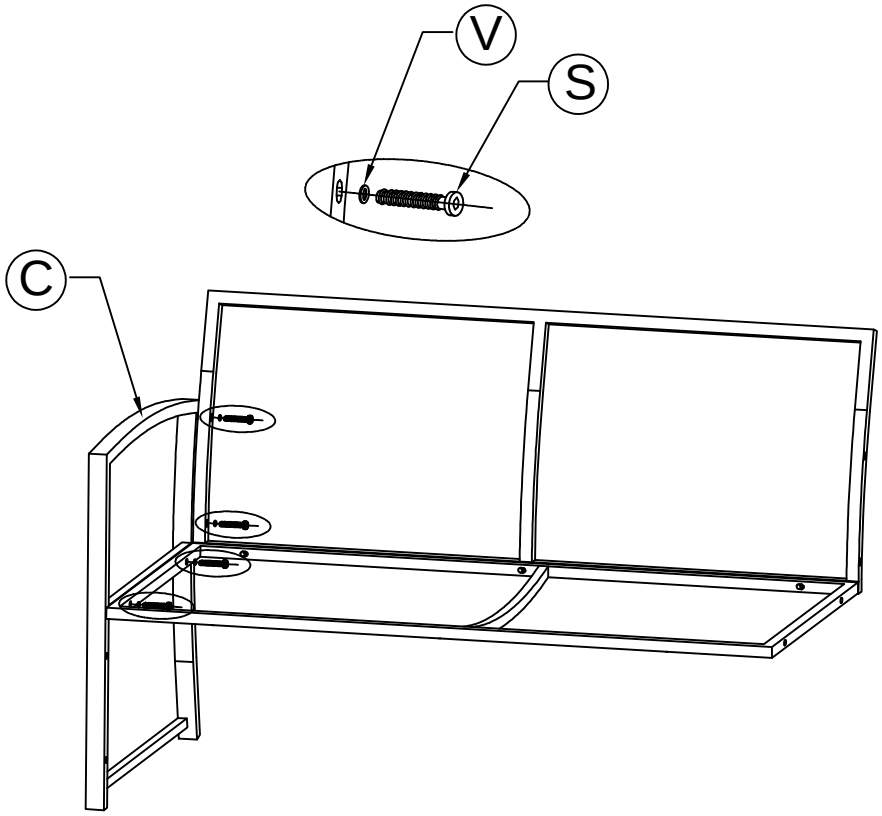

STEP 8

S	x4
	M6*35
V	x4
	M6

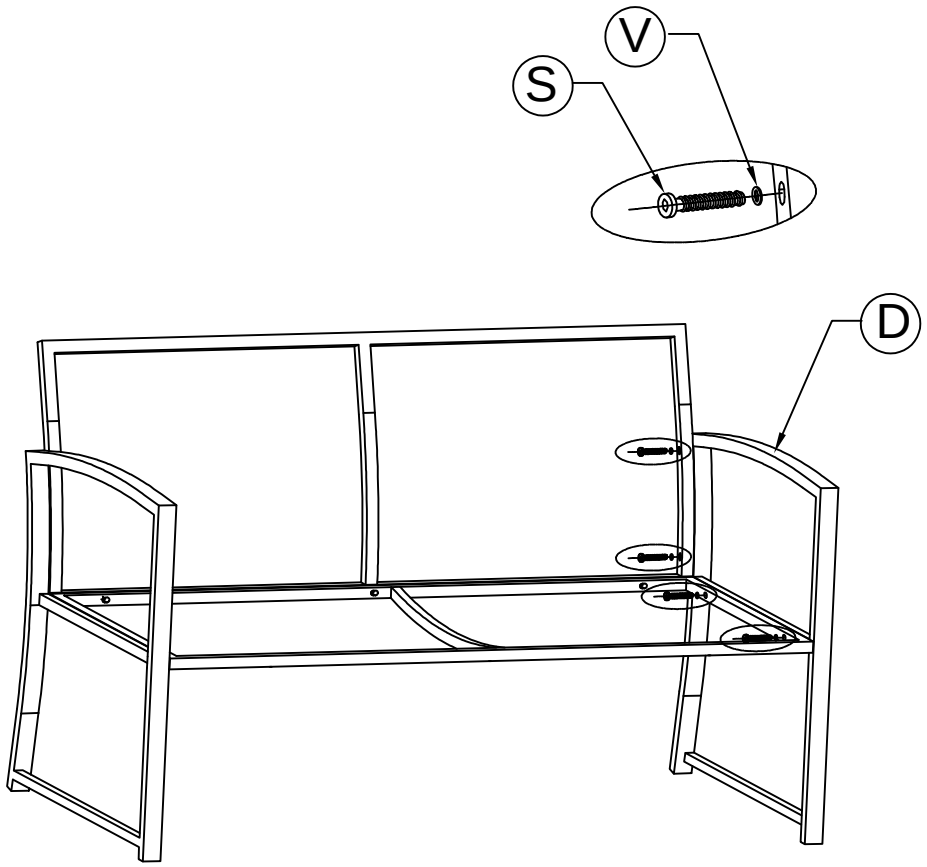

STEP 9

S	x7
	M6*35
V	x7
	M6

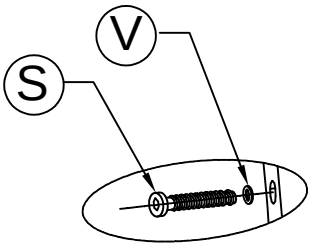

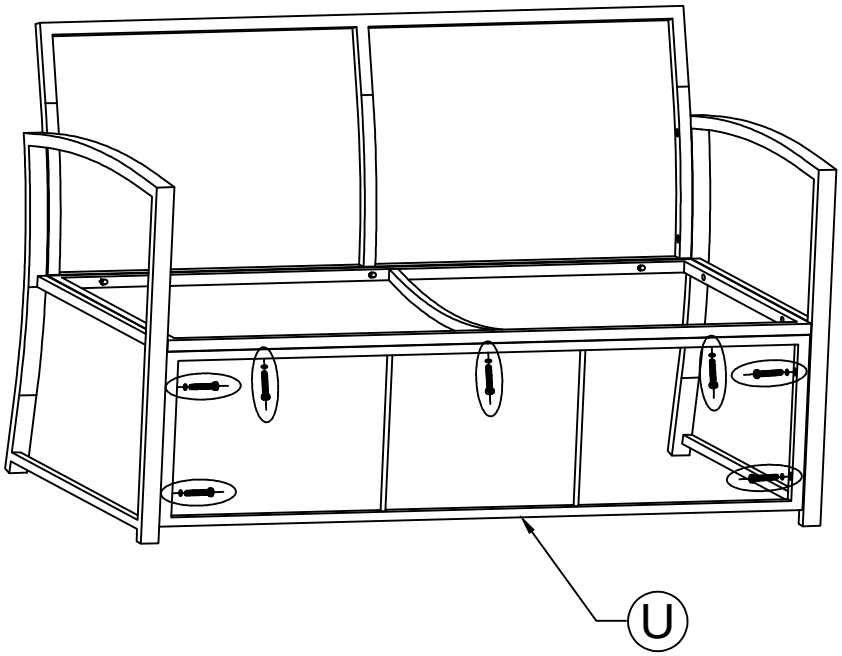

STEP 10

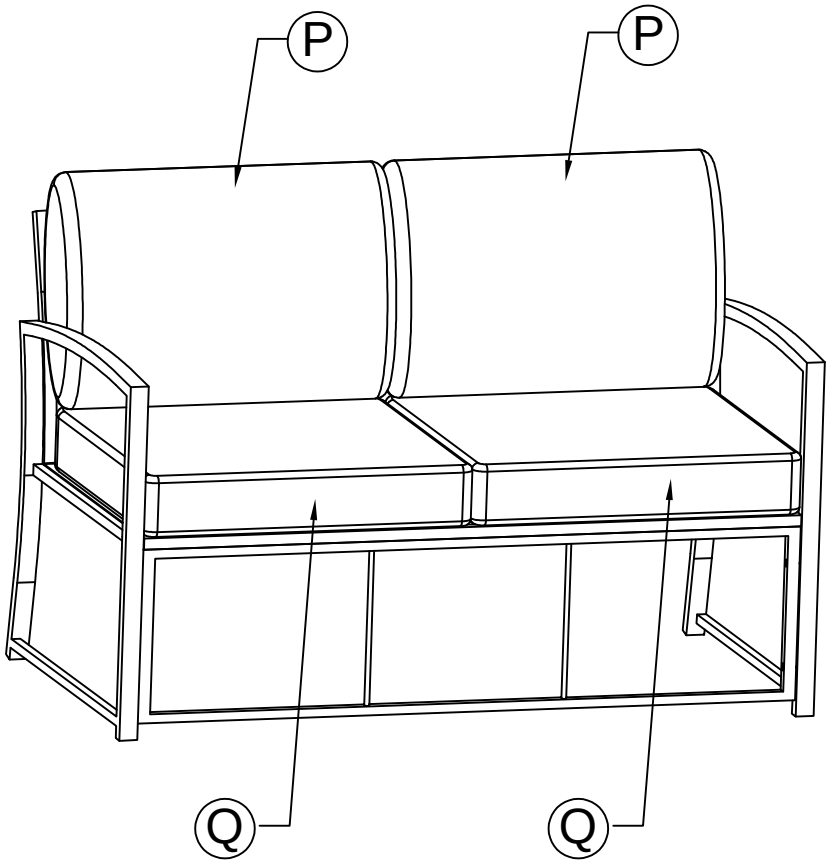

STEP 11

S	x2
	
	M6*35
V	x2
	
	M6

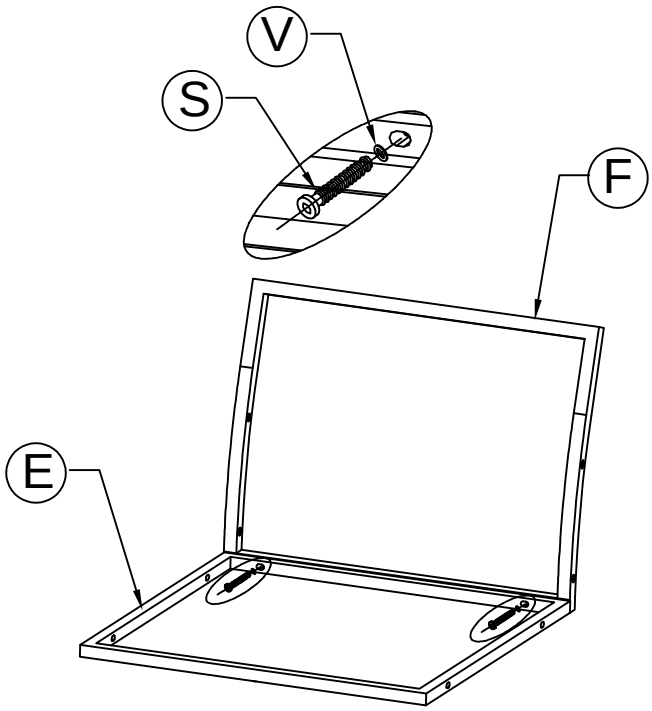

STEP 12

S	x4
	
	M6*35
V	x4
	
	M6

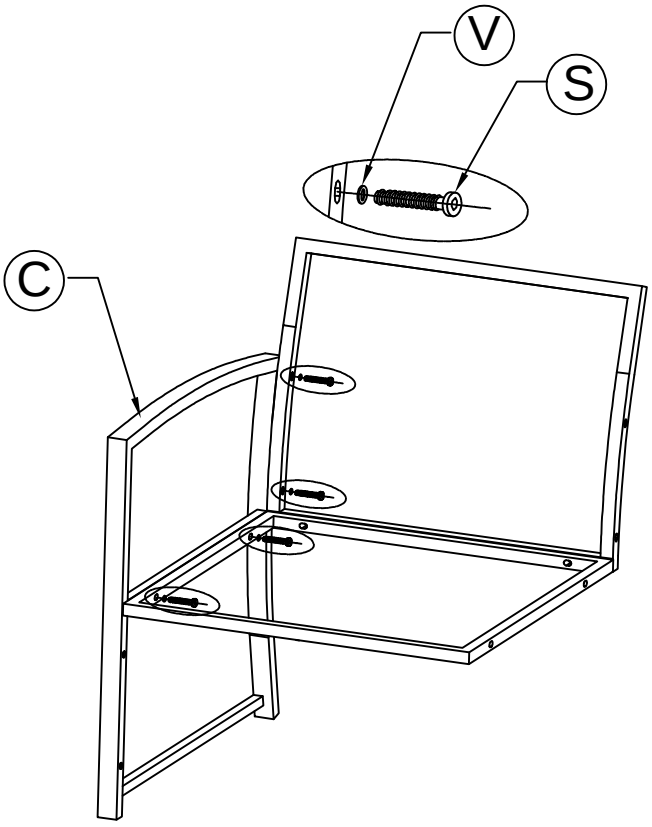

STEP 13

S	x3
	
	M6*35
V	x3
	
	M6

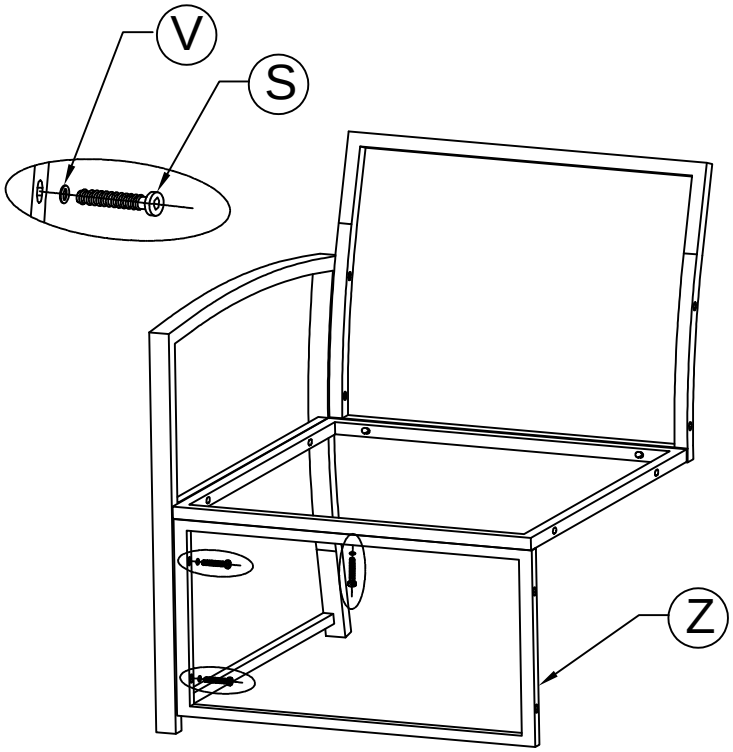

STEP 14

S	x3
	
	M6*35
V	x3
	
	M6

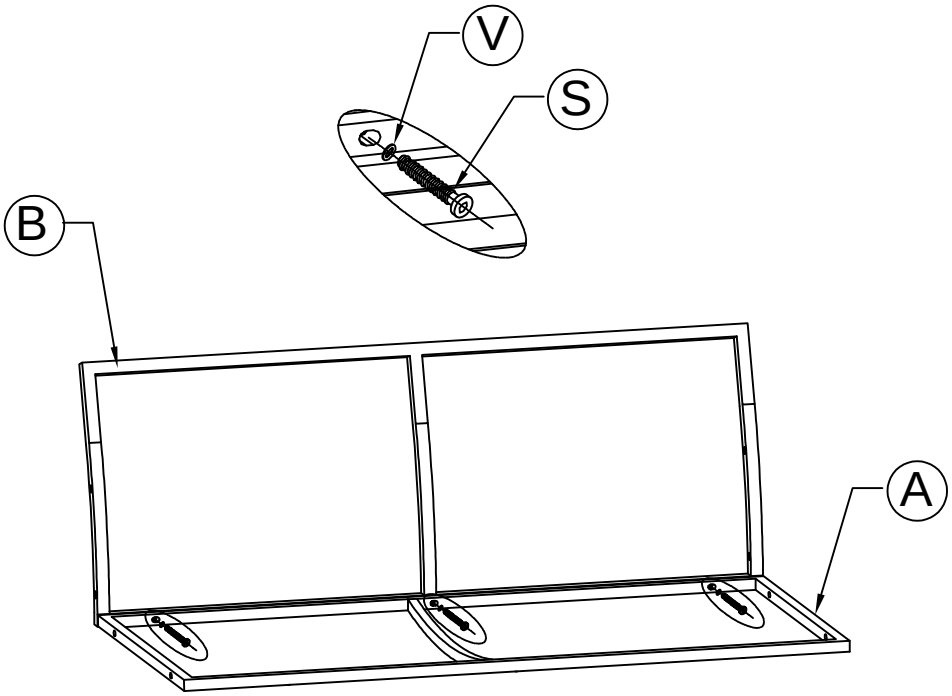

STEP 15

S	x4
	
	M6*35
V	x4
	
	M6

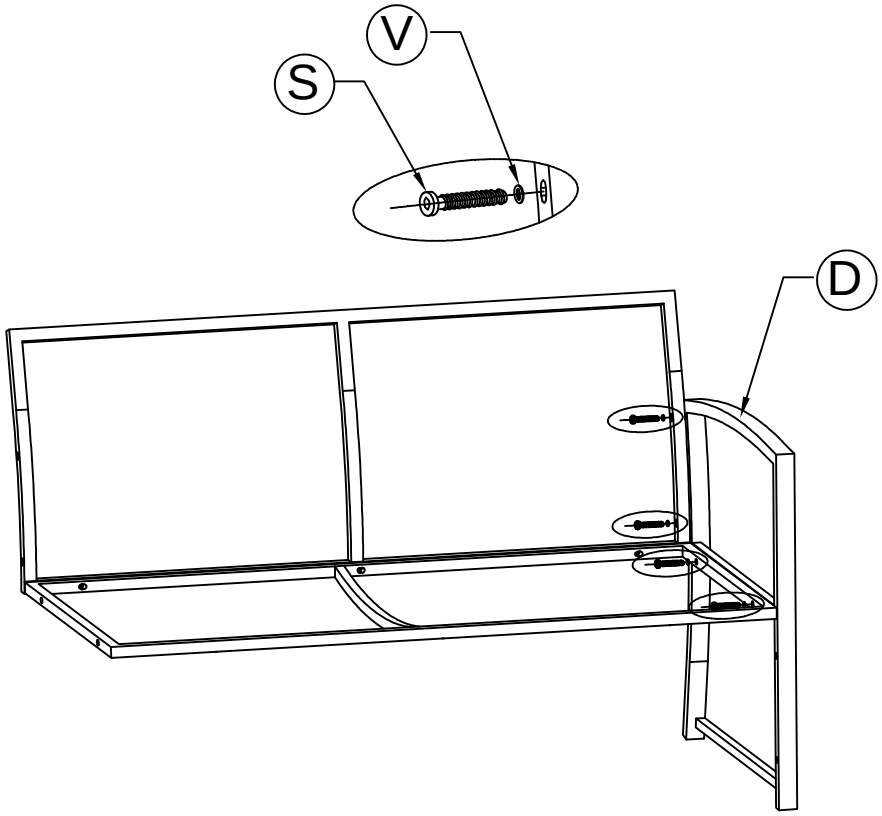

STEP 16

S	x5
	
	M6*35
V	x5
	
	M6

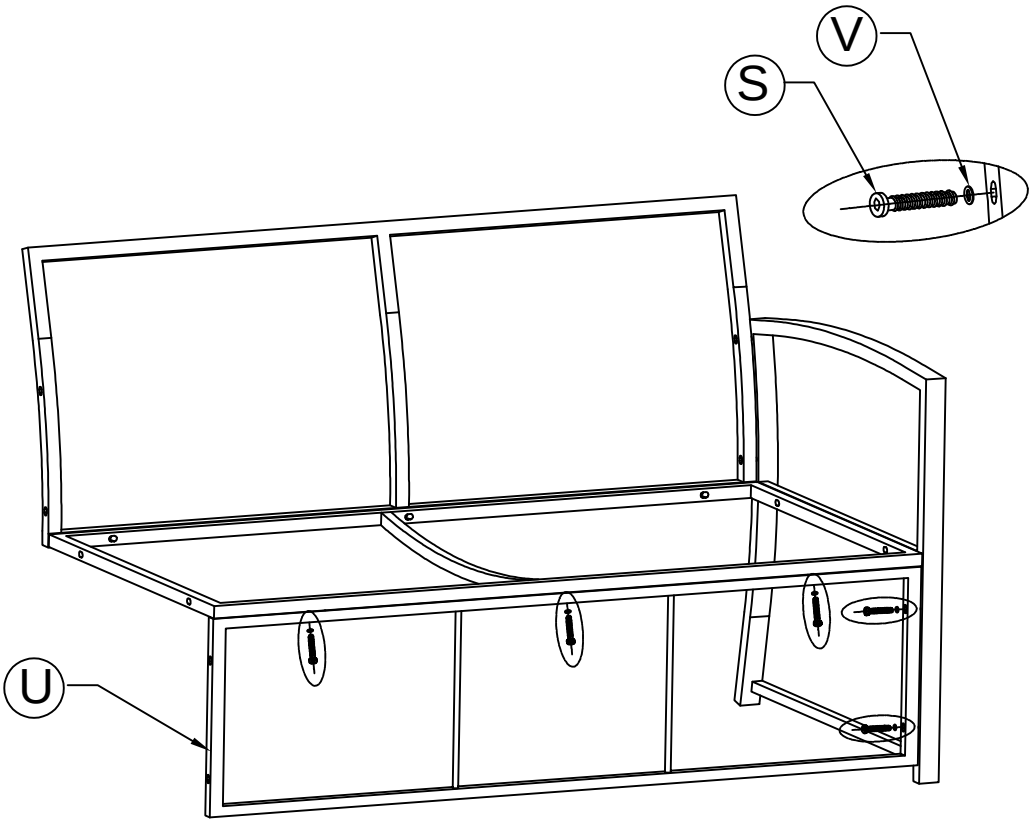

STEP 17

T	x6
	M6*55
V	x12
	M6
W	x6
	M6

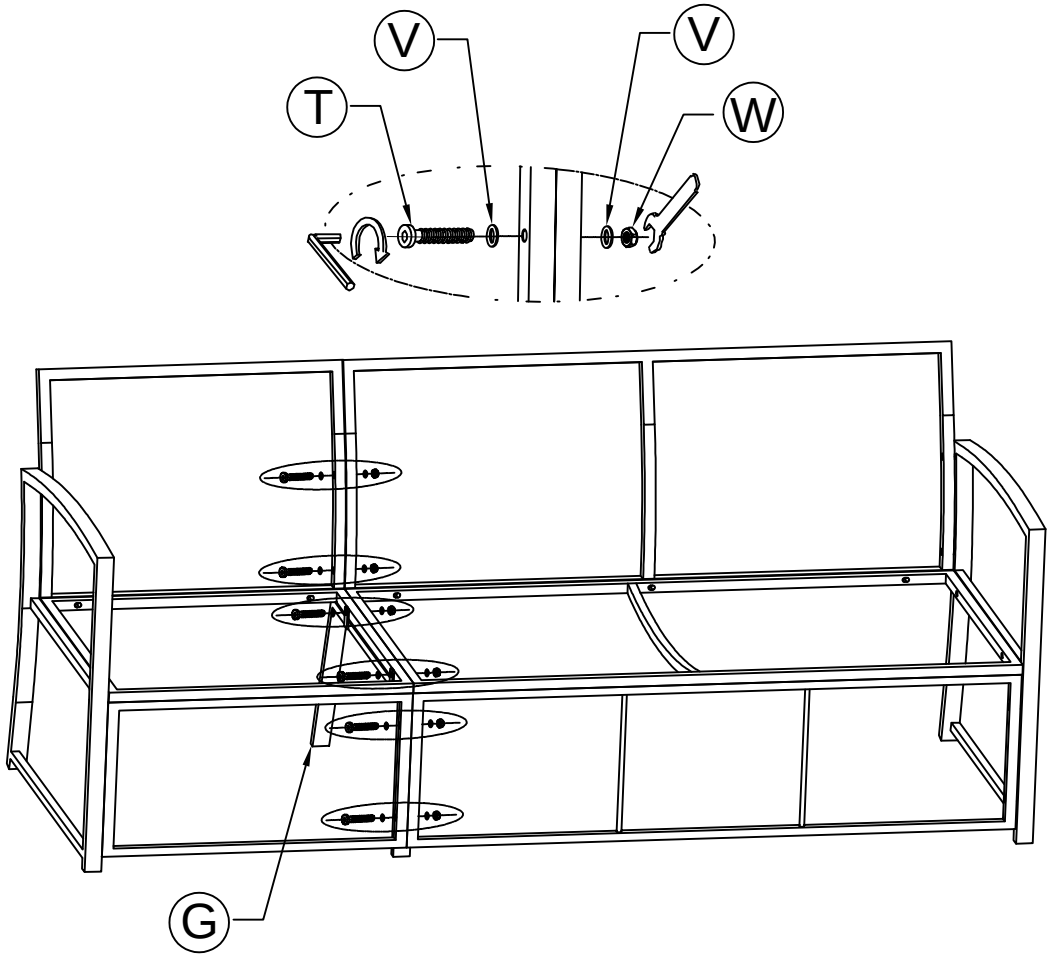

STEP 18

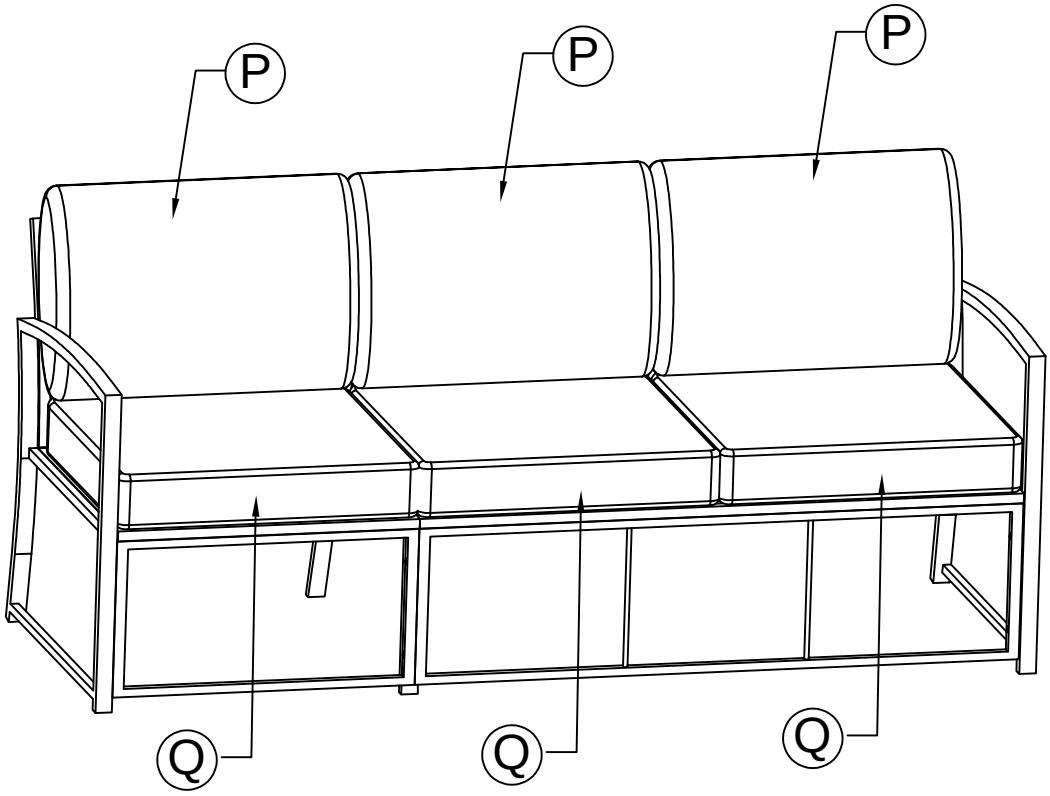

STEP 19

S	x4
	M6*35
V	x4
	M6

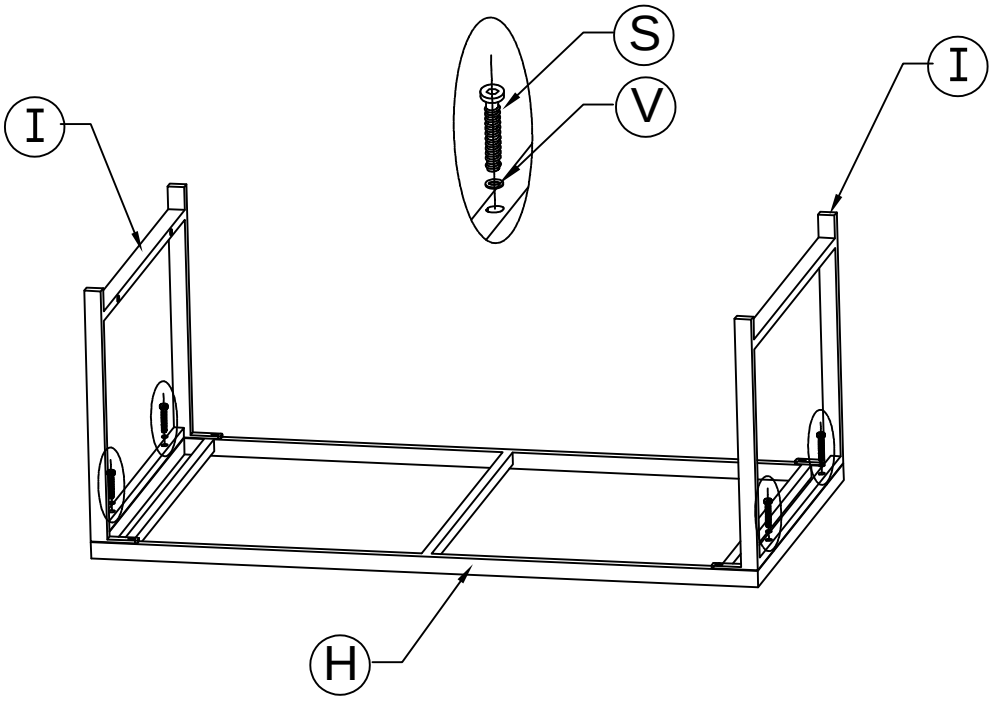

STEP 20

R	x4
	M6*20
V	x4
	M6

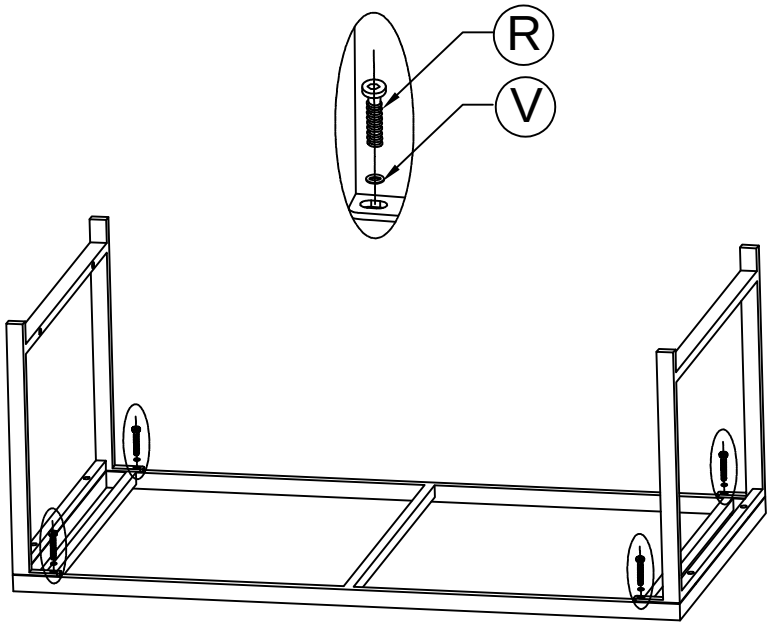

STEP 21

S	x4
	 M6*35
V	x4
	 M6

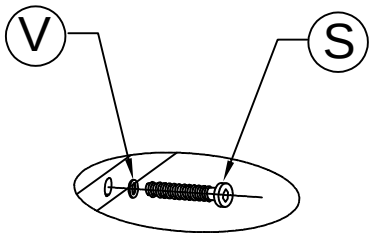

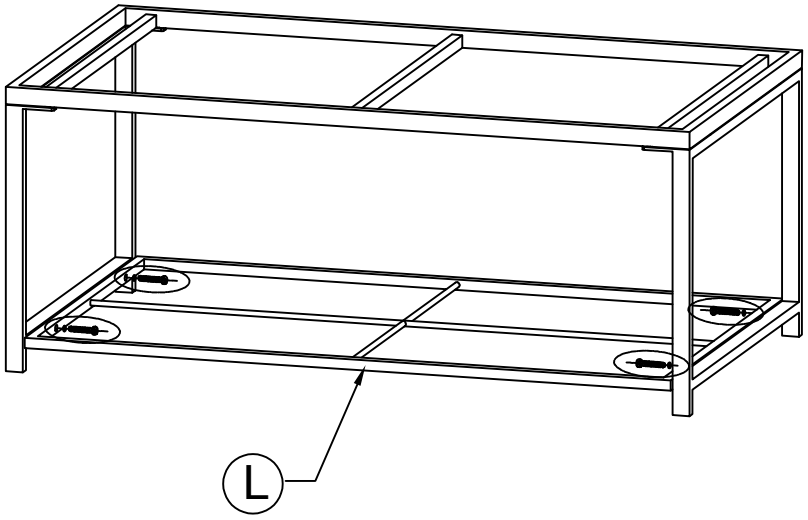

STEP 22

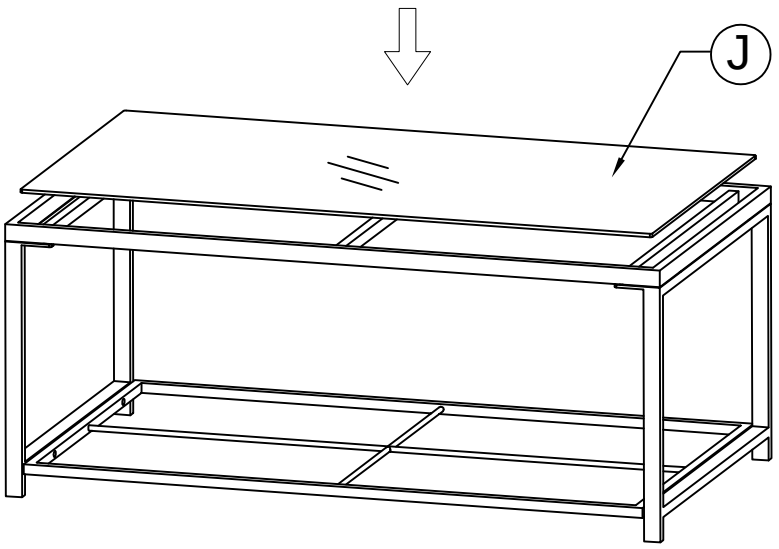

STEP 23

S	x4
	M6*35
V	x4
	M6

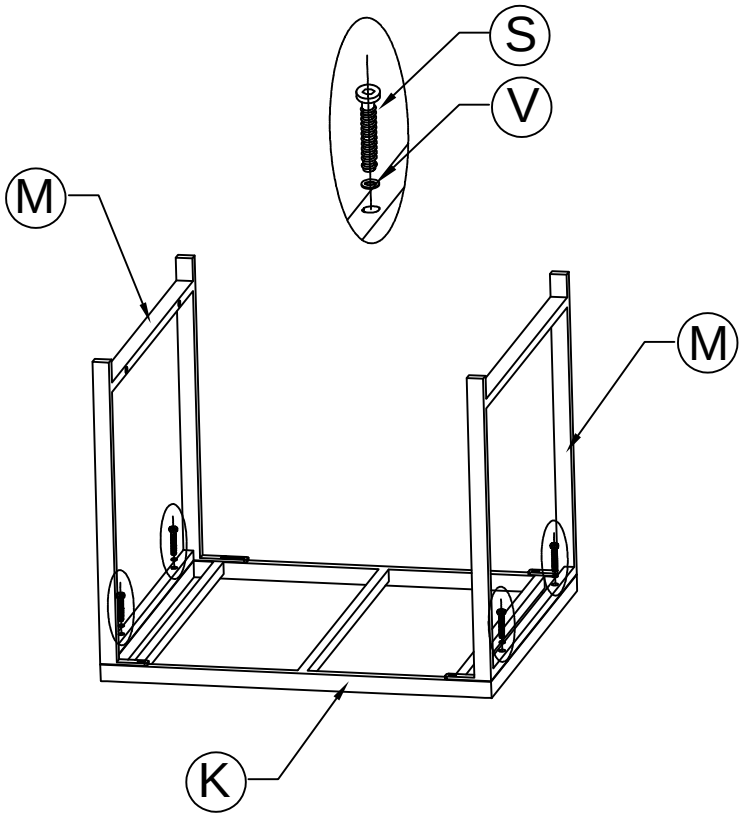

STEP 24

R	x4
	M6*20
V	x4
	M6

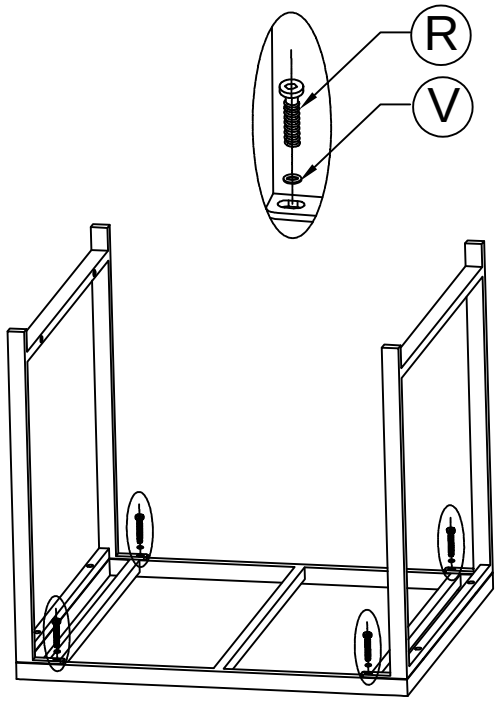

STEP 25

S	x4
	
	M6*35
V	x4
	
	M6

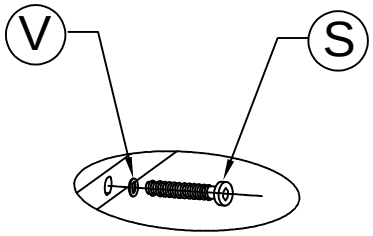

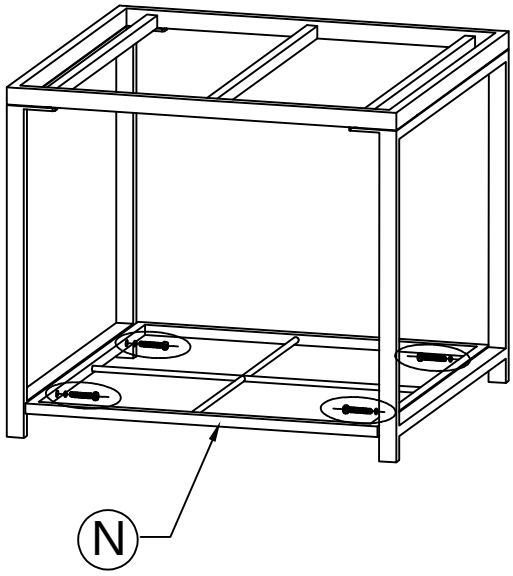

STEP 26

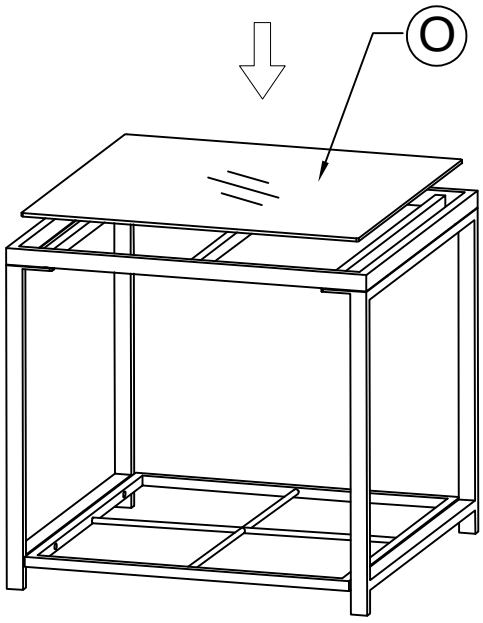

STEP 27

