Parts List For Headboard

HARDWARE BAG

(1) 5/16–18 X 1 1/2" PHILLIPS HEAD BOLT–4
(2) 5/16" SPRING WASHER–4
(3) 5/16" ID X 7/8" OD FLAT METAL WASHER–4
(4) 1/4–20 X 1 1/2" PHILLIPS HEAD BOLT–4
(5) 1/4" ID X 3/4" OD FLAT METAL WASHER–8
(6) 1/4–20 HEX NUT–4

HEADBOARD PARTS

(7) HEADBOARD POST –2
(8) HEADBOARD PANEL–1

TOOLS NEEDED : PHILLIPS SCREW DRIVER (NOT PROVIDED)

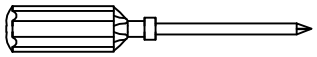

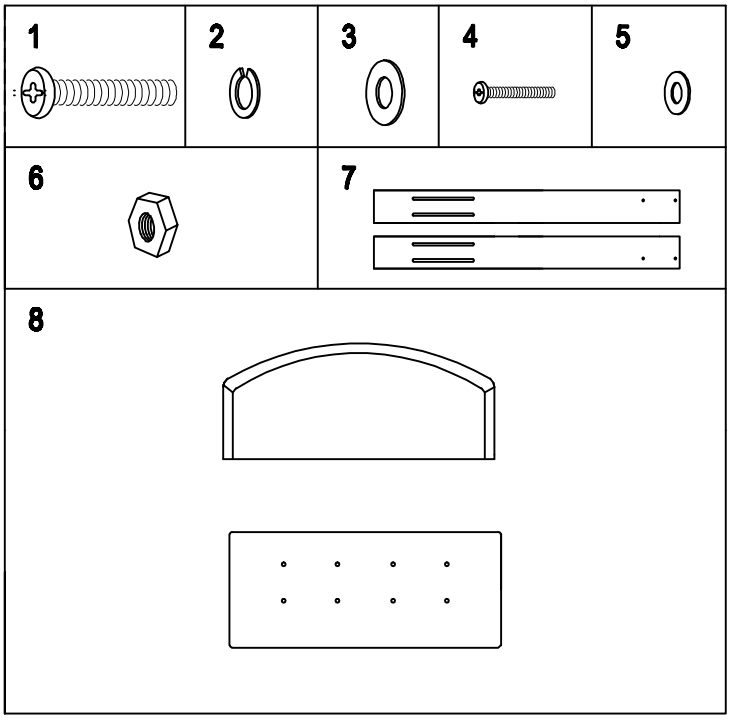

SAVE ALL PACKAGING MATERIALS UNTIL PRODUCT IS FULLY ASSEMBLED. HARDWARE AND SMALL PIECES MAY NOT BE SEEN AND COULD BE ACCIDENTALLY DISCARDED WITH PACKAGING MATERIALS.

NOTE: Use phillips screwdriver to unscrew headboard post and discard screws and washer used to secure post in transit.

- **STEP 1– Assembly of Headboard Post to FULL/CAL. KING and KING size panel**
- Place headboard panel (8) face down on flat and clean surface. SEE FIGURE 1
- Align holes on headboard post (7) with threaded inserts on back panel (8). SEE FIGURE 1

NOTE : Use first and second threaded inserts on back panel for highest headboard, second and third threaded inserts for mid– height headboard and third and fourth threaded inserts for lowest hight headboard panel.

NOTE: For Assembly of Queen Size Headboard. See Figure 2

- Secure headboard post (7) with bolt (1),spring washer (2) and Flat metal washer (3).
- Tighten bolt (1) with Phillips screwdriver. SEE FIGURE 2

FOR ASSISTANCE IN ASSEMBLY ONLY OF THIS PRODUCT. CALL OUR HELP DESK . PLEASE HAVE THE STYLE NUMBER AVAILABLE BEFORE YOU CALL. (STYLE # OR NAME CAN BE FOUND ON PACKING CARTON OR SALES RECEIPT.)
OUR PRODUCT IS INSPECTED TO ENSURE IT IS IN GOOD CONDITION. IF YOUR FURNITURE APPEARS TO HAVE BEEN DAMAGED IN SHIPMENT OR YOU ARE IN NEED OF REPLACEMENT PARTS PLEASE CONTACT THE DEALER FROM WHOM YOU PURCHASED THE PRODUCT.

Instruction Sheet

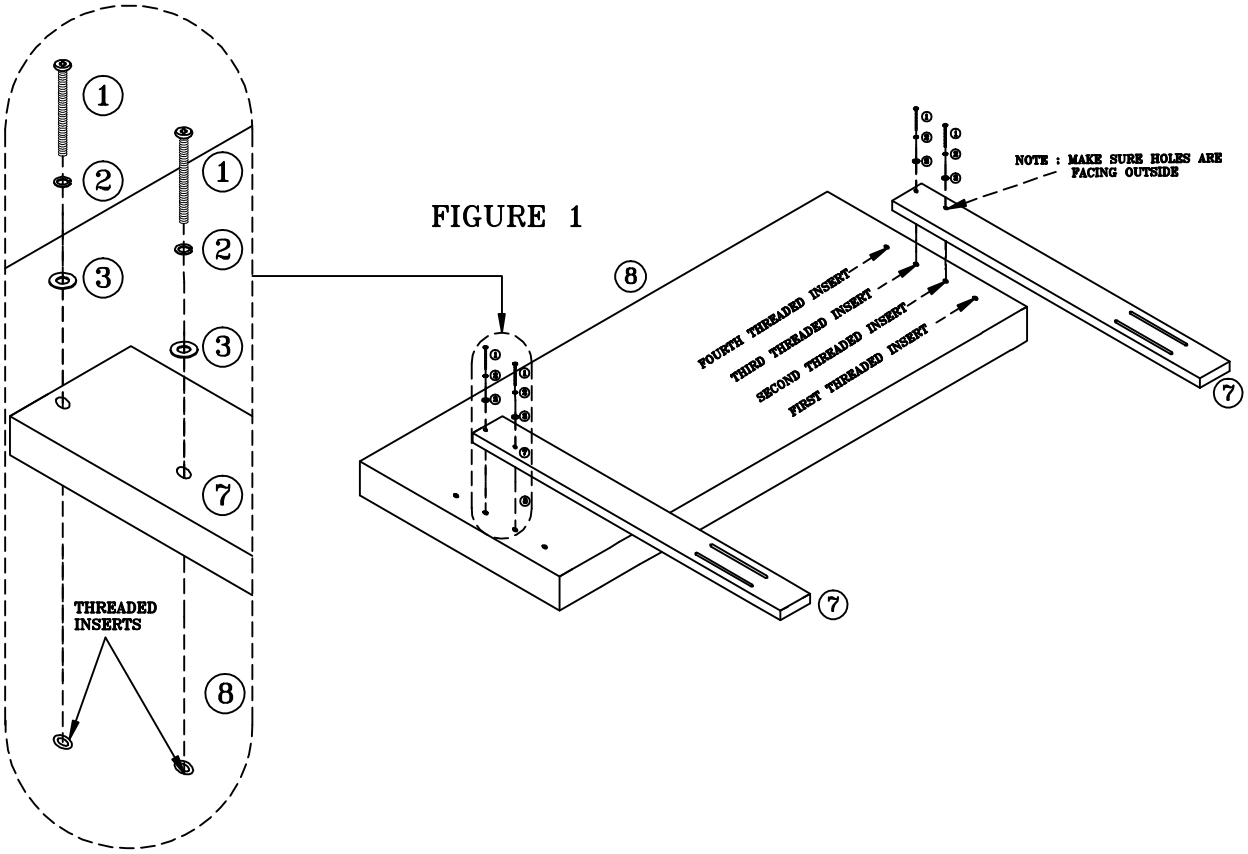

FIGURE 1

STEP 2– Assembly of Headboard Post for QUEEN size panel

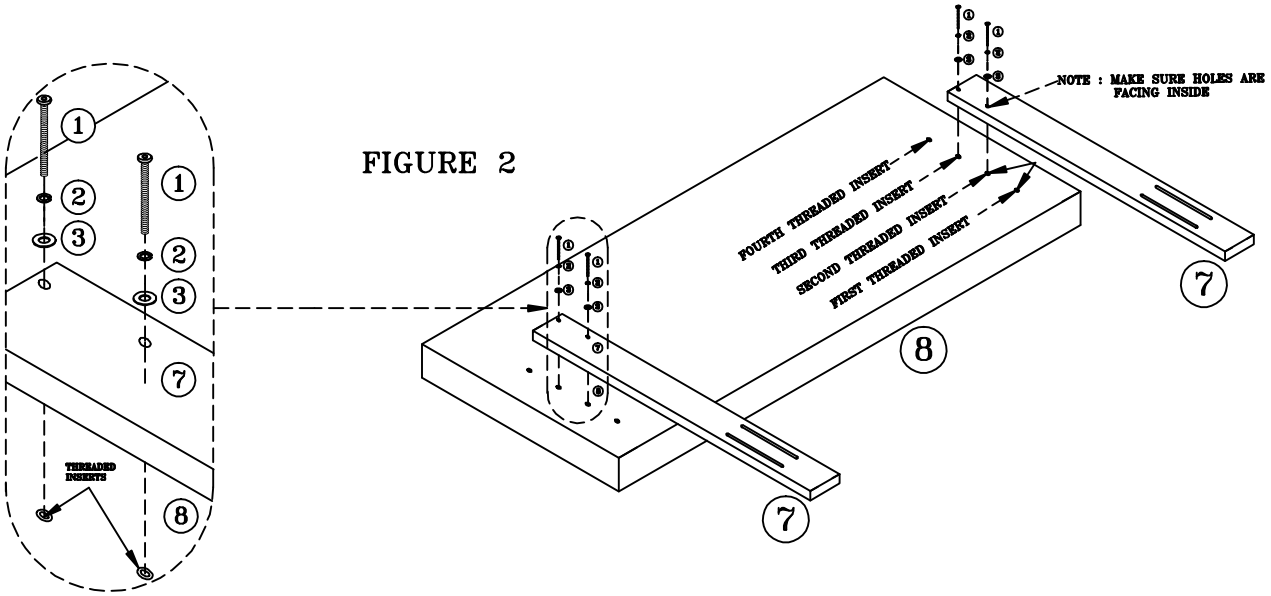

FIGURE 2

Instruction Sheet

STEP 3– Headboard Frame Assembly

- Place headboard and frame in desired location in room.
- Align holes on headboard post (7) with holes on headboard frame bracket. SEE FIGURE 3
- Secure headboard post (7) with bolt (4),flat metal washer (5) and hex nut (6).
- Tighten bolt (4) with phillips screwdriver. SEE FIGURE 3

FIGURE 3

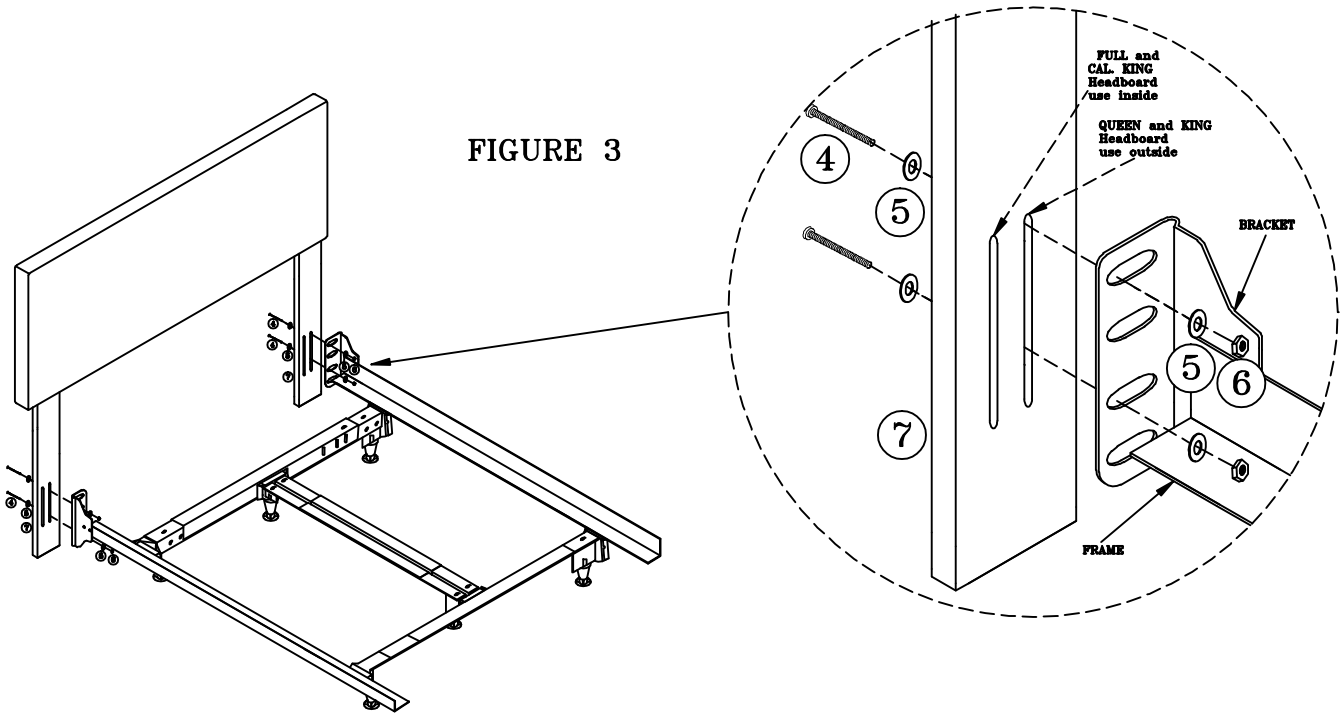

PRODUCT FULLY ASSEMBLED

