KVSP2522B0,1,2,5,6,8

25" Stainless Steel Sink With Iron Bathroom Console Sink Base

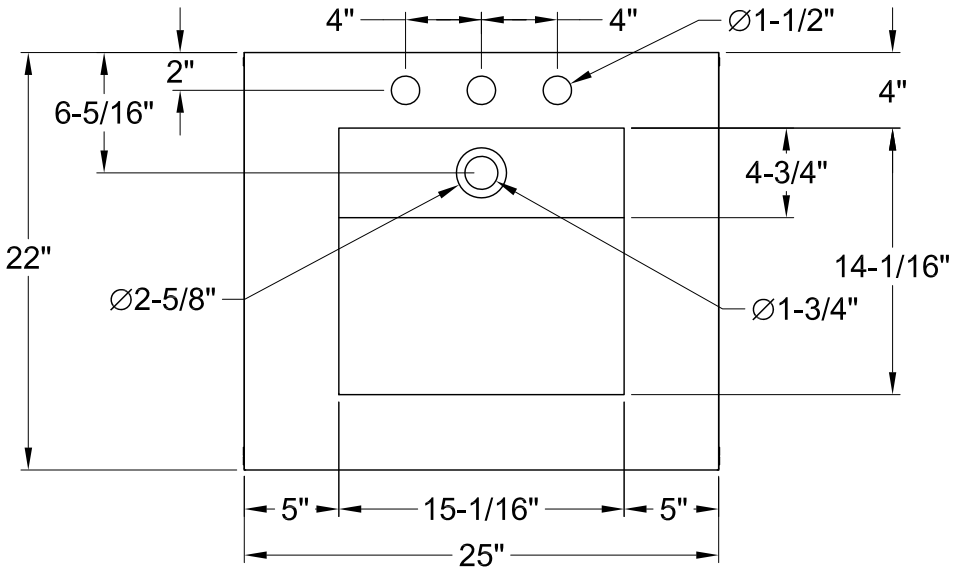

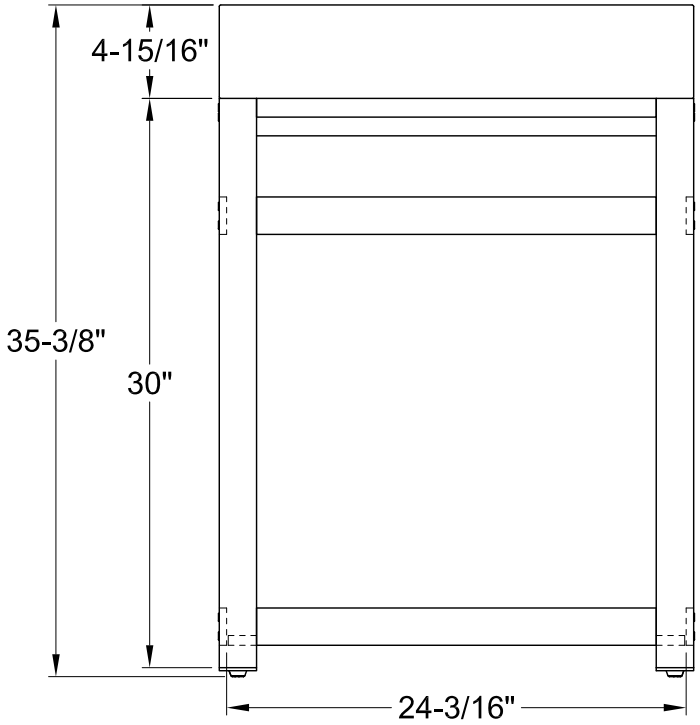

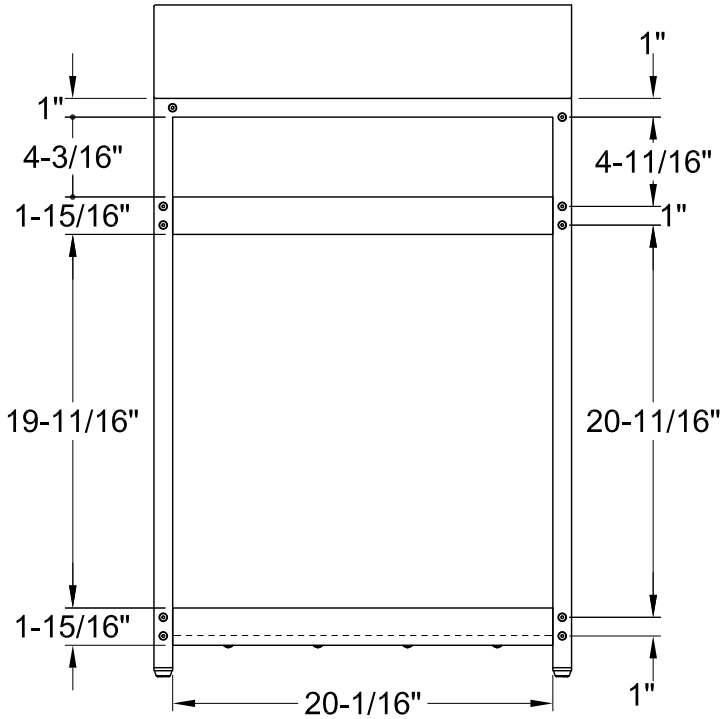

Ref# KVSP2522B0,1,2,5,6,8 | 2018-07-A