ITEM NO.	PART NUMBER	DESCRIPTION	QTY.
1	BPMC	Base	2
2	TU12-.75	MAIN TUBE	2
3	RLB SET	RLB SET	1
4	BL2TD-1.25	SUPPORT BALL	2

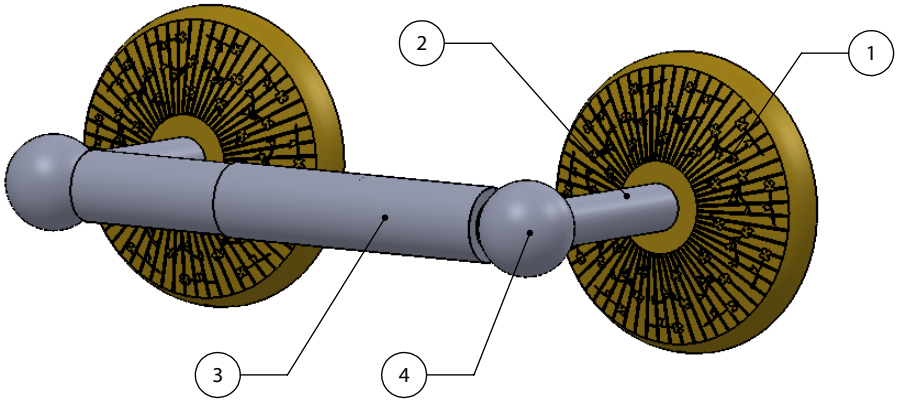

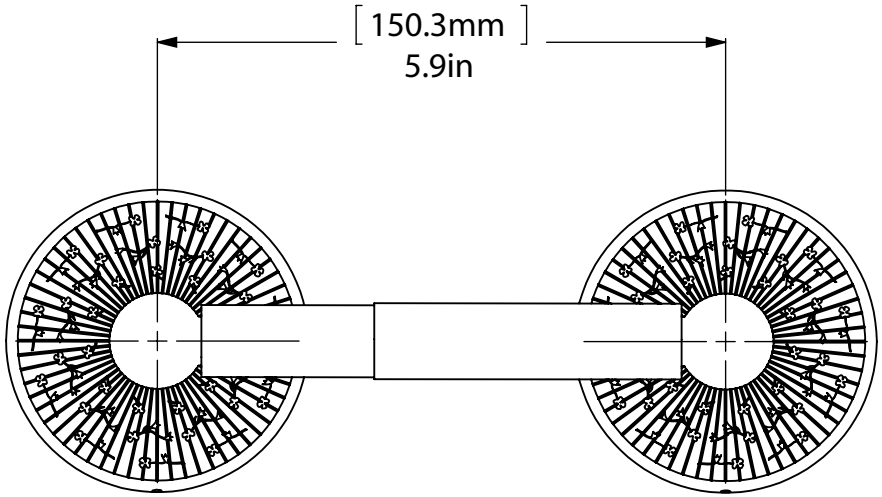

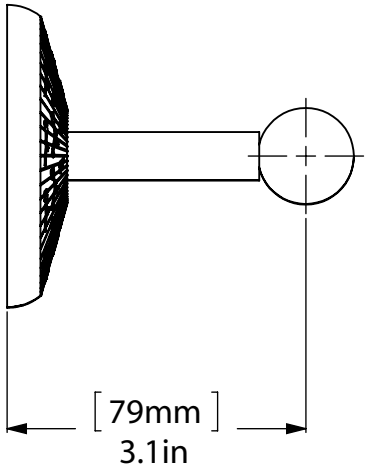

UNLESS OTHERWISE STATED			INITIALS	DATE	ITEM	QTY	DRG/PART NO	CLIENT:			
DO NOT SCALE DRAWING	X.XXX +/-0.025	DESIGNED		IJM	MATERIAL		BRASS	WEIGHT		FINISH	TBD
CHAMFER ALL EDGES 0.5X45°	X.XX +/-0.1	DRAWN		IJM	HEAT TREAT		NA			QUANTITY	
DRAWING ISO	X.X +/-0.25	CHECKED		R. ANDRIS	CUSTOMER			CUSTOMER No		---	
	X +/-0.75	PROJ.ENG			DESCRIPTION:					DRAWING No.	REV
	ANGLES	SAFETY									0
	X.XX +/-0.05°	APPROVED		R. ANDRIS							
	X.X +/-0.1°	FILENAME								SCALE 1:2	SHEET: 01 A4
	X +/-0.5°										
FIRST ANGLE PROJECTION	MACHINED FINISH 3.2										