ASSEMBLY INSTRUCTION

DB101#DOG BED Series



Note:

-The product is made of natural wood, there may be natural defects such as scars and cracks on the surface, please understand.

-Slight variations in color between the product image and the actual item may occur. This is a normal characteristic of photography and screen display technology.

-This assembly manual is applicable to DB101#DOG BED Series products of different sizes and colors.

-If you have any questions about this product, please contact us in time. We are more than happy to help you .

COMPONENT LIST

Please check and ensure that the following parts are in the package.

S



A ×1



C×1



B ×4



D×1

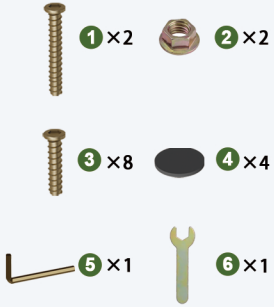

1 ×2 2 ×2

3 ×8 4 ×4

5 ×1 6 ×1

M



A ×1

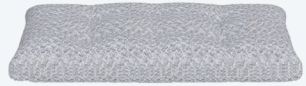

C×1



D×1

E×1



B ×4

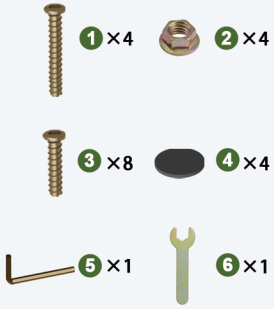

1 ×4 2 ×4

3 ×8 4 ×4

5 ×1 6 ×1

L / XL



A ×1

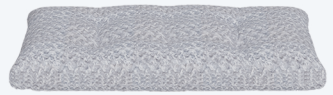

C×1



D×1

E×1



B ×4

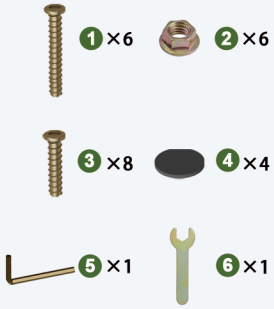

1 ×6 2 ×6

3 ×8 4 ×4

5 ×1 6 ×1

ASSEMBLY STEPS

Please install it on a soft blanket to prevent scratching the surface.

01 Connecting parts A D E.

STEP

S

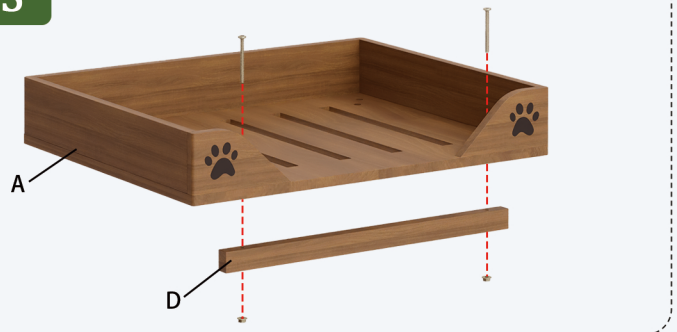

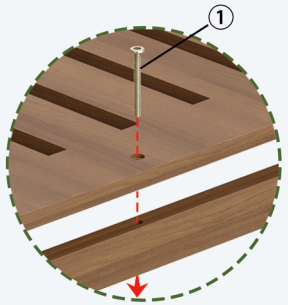

Insert the long screws through the pre-drilled holes.

M

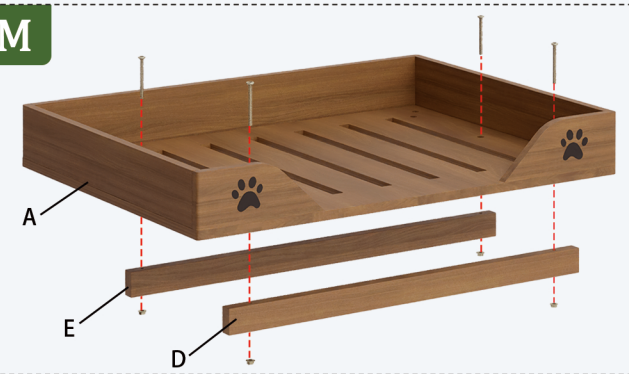

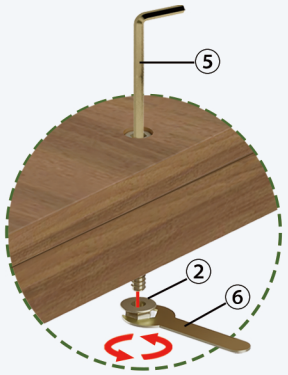

Hold the screw in place with wrench ⑤, then tighten the nut ② with wrench ⑥.

L/XL

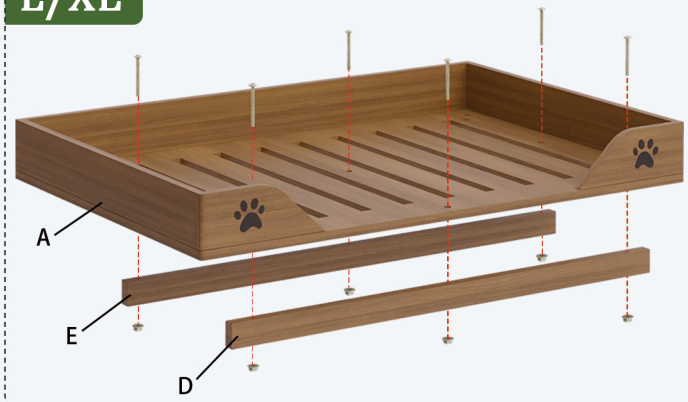

02 Connecting parts A B. (Steps 2, 3, and 4 apply to all sizes)

STEP

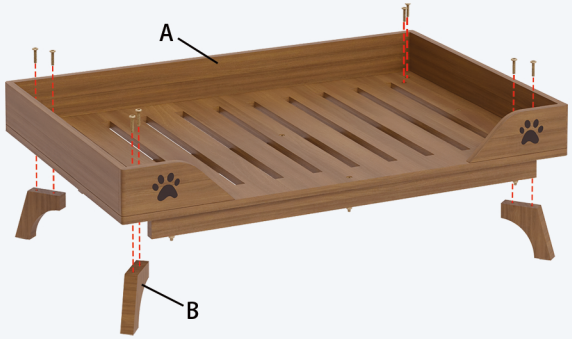

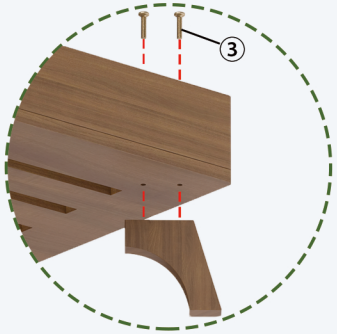

03 Glue on the foot mats.

STEP



04 Place the cushion into the bed frame.

STEP

