# Reclining Sofa

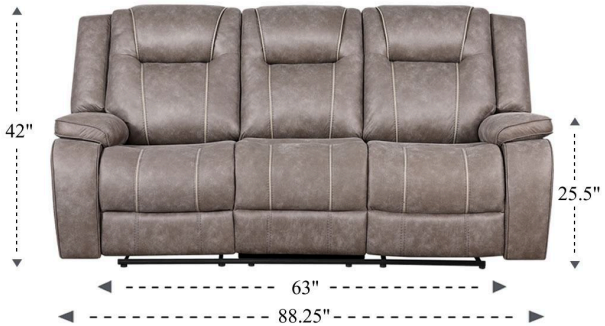

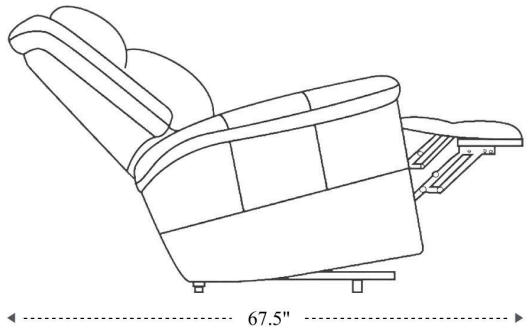


| | | | |
|---|---|---|---|
| Overall Dimensions | 88.25" x 44" x 42" | Seat Width | 21" |
| Overall Width | 88.25" | Seat Depth | 22" |
| Overall Depth | 44" | Seat Height | 20" |
| Overall Height | 42" | Arm Width | 12.5" |
| Overall Weight | 235.4 lbs. | Arm Depth | 20" |
| Fully Reclined | 67.5" | Arm Height | 25.5" |
| Distance from Wall | 3" | Back Width | 28" |
| Back of Seat to end of Chaise | 40" | Back Height | 26" |
| Leg Height (Distance from Foot Rest to Floor in Full Recline) | 23.5" | Headrest Extended from Back | -- |
| Head Height (Distance from Headrest to Floor in Full Recline) | 34" | | |

# Reclining Console Loveseat

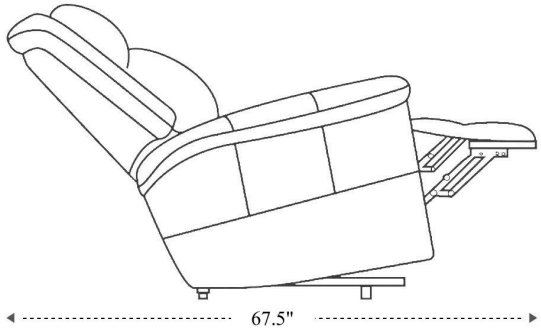


| | |
|---|---|
| Overall Dimensions | 77.5" x 44" x 42" |
| Overall Width | 77.5" |
| Overall Depth | 44" |
| Overall Height | 42" |
| Overall Weight | 281.6 lbs. |
| Fully Reclined | 67.5" |
| Distance from Wall | 3" |
| Back of Seat to end of Chaise | 40" |
| Leg Height (Distance from Foot Rest to Floor in Full Recline) | 23.5" |
| Head Height (Distance from Headrest to Floor in Full Recline) | 34" |

| | |
|---|---|
| Seat Width | 21" |
| Seat Depth | 22" |
| Seat Height | 20" |
| Arm Width | 12.5" |
| Arm Depth | 20" |
| Arm Height | 25.5" |
| Back Width | 28" |
| Back Height | 26" |
| Headrest Extended from Back | -- |