Aluminum Outdoor

USE AND CARE GUIDE

END TABLE

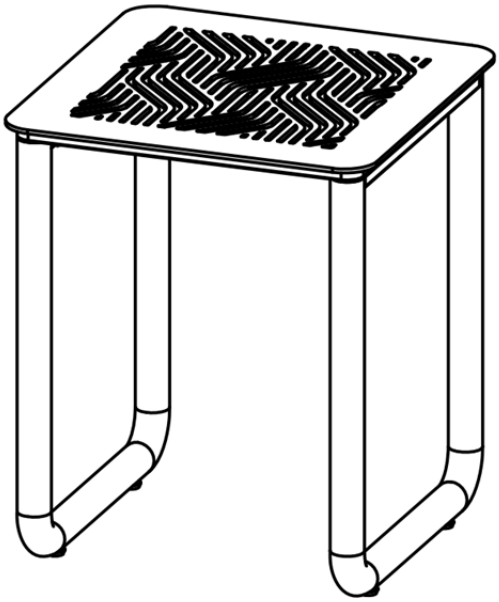

IMPORTANT

PLEASE READ BEFORE YOUR COMMENCE ASSEMBLY

Follow the guidelines in this user guide to ensure correct assembly and care for this product.

READ ALL INSTRUCTIONS BEFORE USE

When using these furnishings, always follow basic precautions, including the following:

Read all instructions before using this set.

To reduce the risk of injury to persons:

☐Do not use this set on soft ground.

☐Do not stand or allow children to stand on the assembled chairs, sofa, ottoman or fire pit.

☐After assembly, verify that all hardware connections are secure before putting the product into use.

☐Improper installation, adjustment, alteration, service or maintenance can cause injury or property damage.

☐Read all installation, operation, and maintenance instructions thoroughly before installing or servicing this equipment.

PLANNING ASSEMBLY

Before beginning assembly, completely empty contents of carton and remove all packing material. Make sure all parts and hardware are present. If any parts are missing or any questions about damaged, please contact us in time, our after sales team will reply you in 24 hours.

Please take photos of the SKU No, and WA label before opening the boxes. Once you find something is wrong, please send us the details with above photos. That can help us to solve the problem more quickly.

PACKAGE CONTENTS: 1PC END TABLE

NOTE: Place all parts on a soft, nonabrasive, level surface for assembly, do not over-tighten hardware connections.

END TABLE INSTALLATION STEPS:

PART LIST

Ref	Part Name	Description	QTY(PC)	Ref	Part Name	Description	QTY(PC)
A	End Table Top	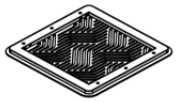	1	CC	M6		14
B	End Table Leg		2	DD	Screw Caps		14
AA	Hinge		4	EE	Wrench		1
BB	M6x25		14				

STEP 1: Connect the table top (A) and the table leg (B).

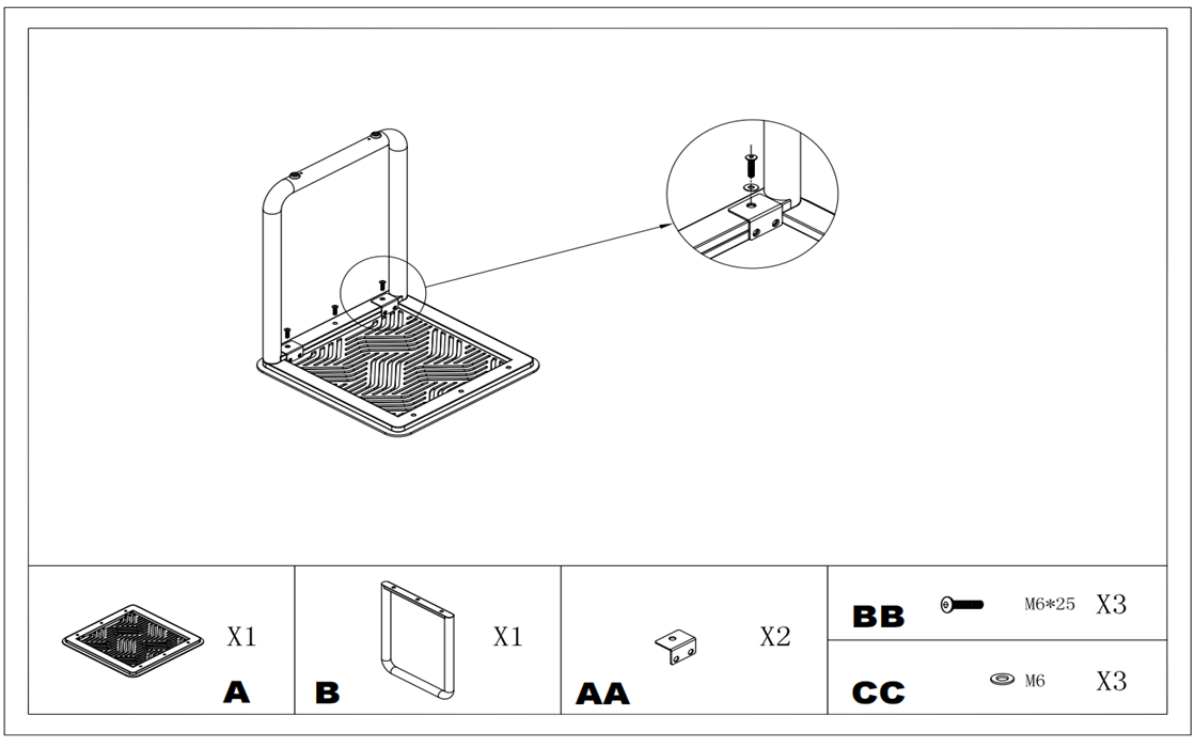

STEP 2: Tighten the screws(BB).

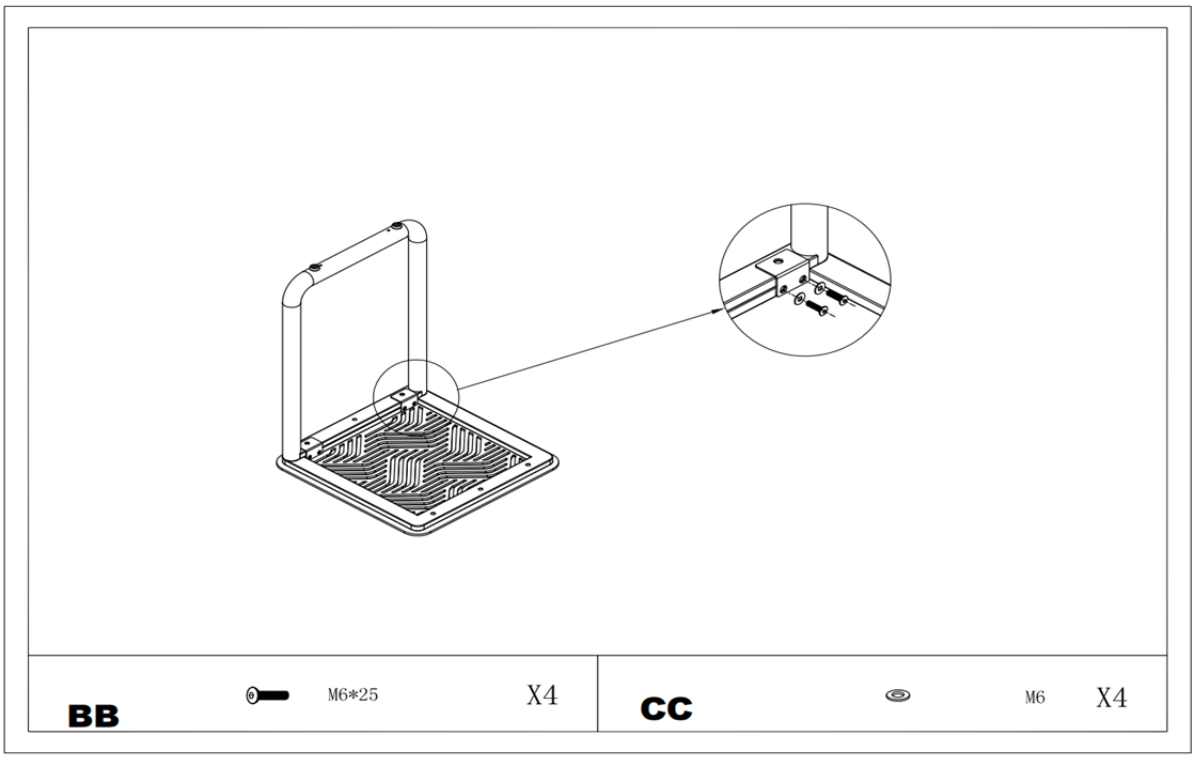

STEP 3: Attach another table leg to the table top with screws (BB).

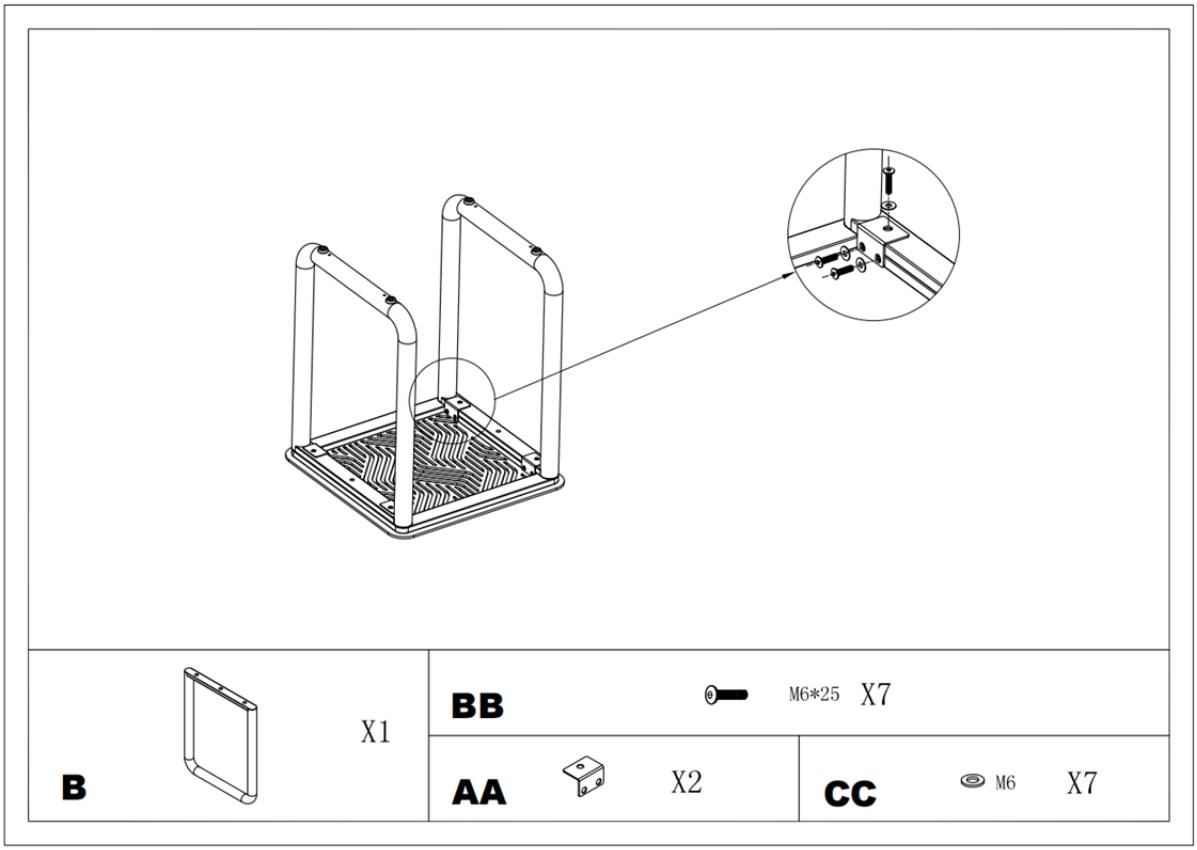

STEP 4: Put the screw caps(DD) on the screws.

**Assembly is complete and the end table is ready for use.

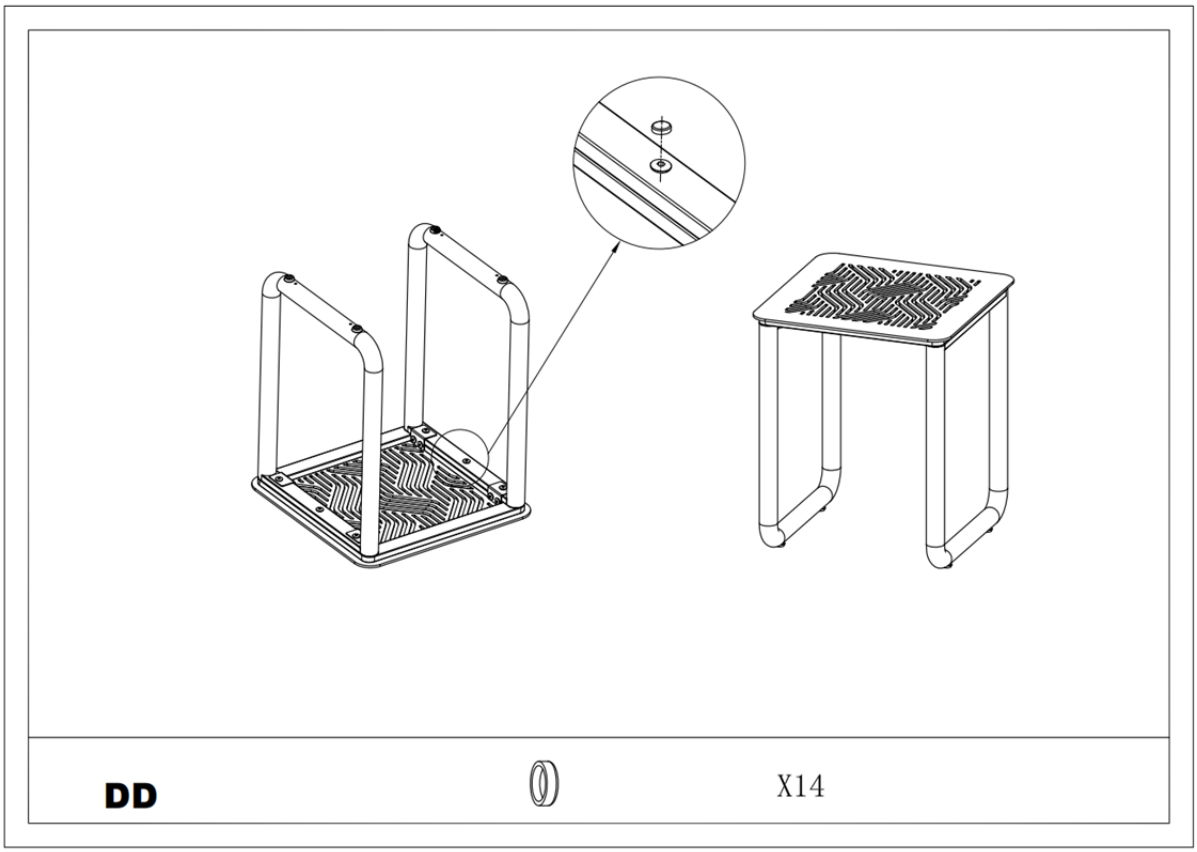

CLEANING&MAINTENANCE

FRAME

Cleaning - Use mild soap and warm water. Do not use abrasive materials, cleaners, or bleach products. Rinse with clean water and dry thoroughly.

Maintenance -Periodically clean and dry thoroughly. Be sure to drain any water accumulated inside the frames. To thoroughly drain frames, remove foot caps and tilt the frames, if necessary, to remove all water. This is critical. Water allowed to accumulate inside the frames and then exposed to sub-freezing temperatures can

cause damage to the frame tubing. Such damage is not covered under warranty. Always clean, drain, and dry thoroughly before storing for the winter. For best results, always store or cover your furniture when not in use.

***When cleaning or moving large or heavy items, always have two people work together. Never drag furniture.**