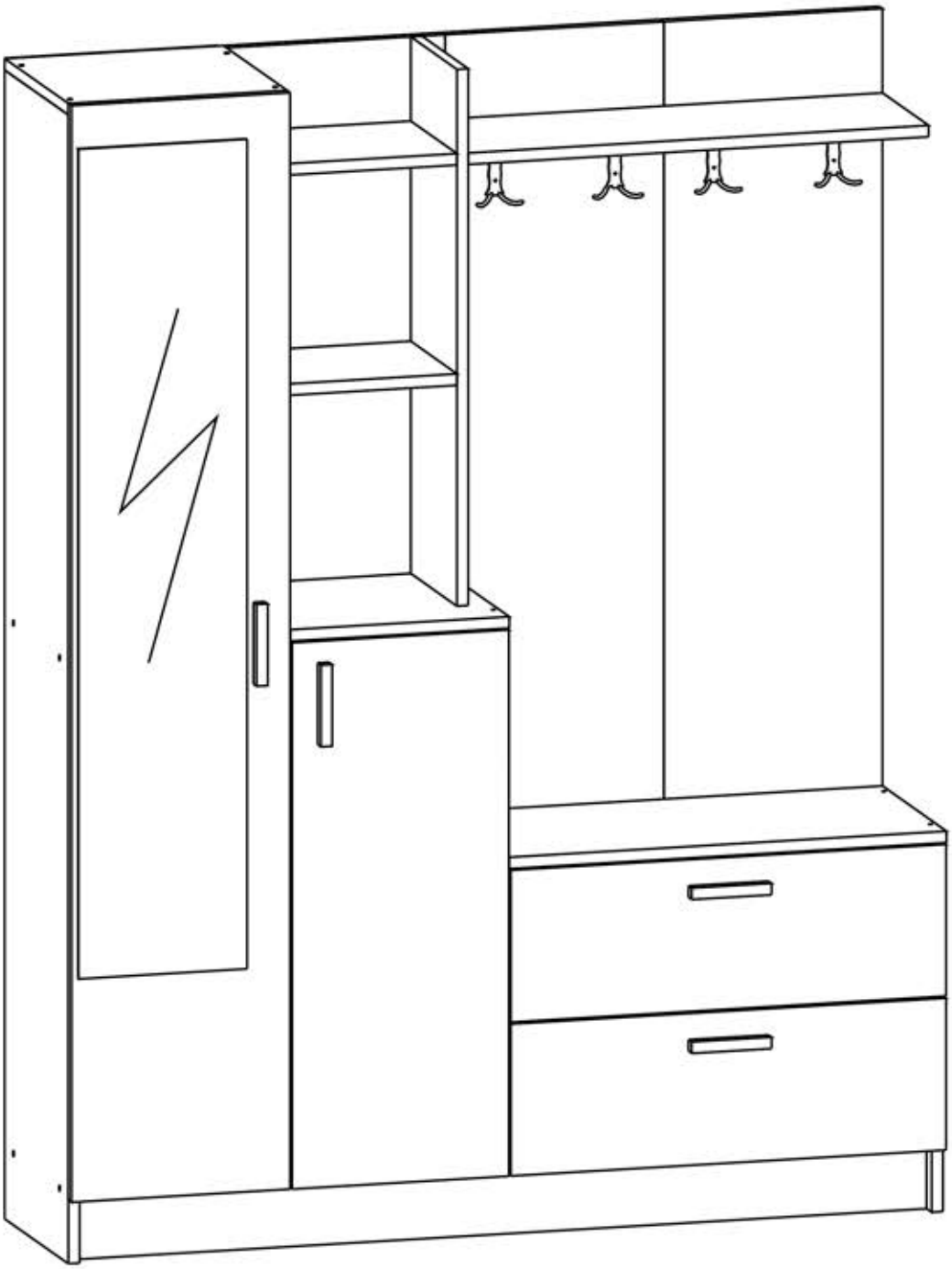

B0502 x14	B0301 x44	B0304 X61	B0307 x8	B0205 x4
B0505 x5	B0506 x2	B0101 x9	B0105 x9	B1201 x4
RENK1 x46 RENK2 x3	B0508 x20	B0318 x80		

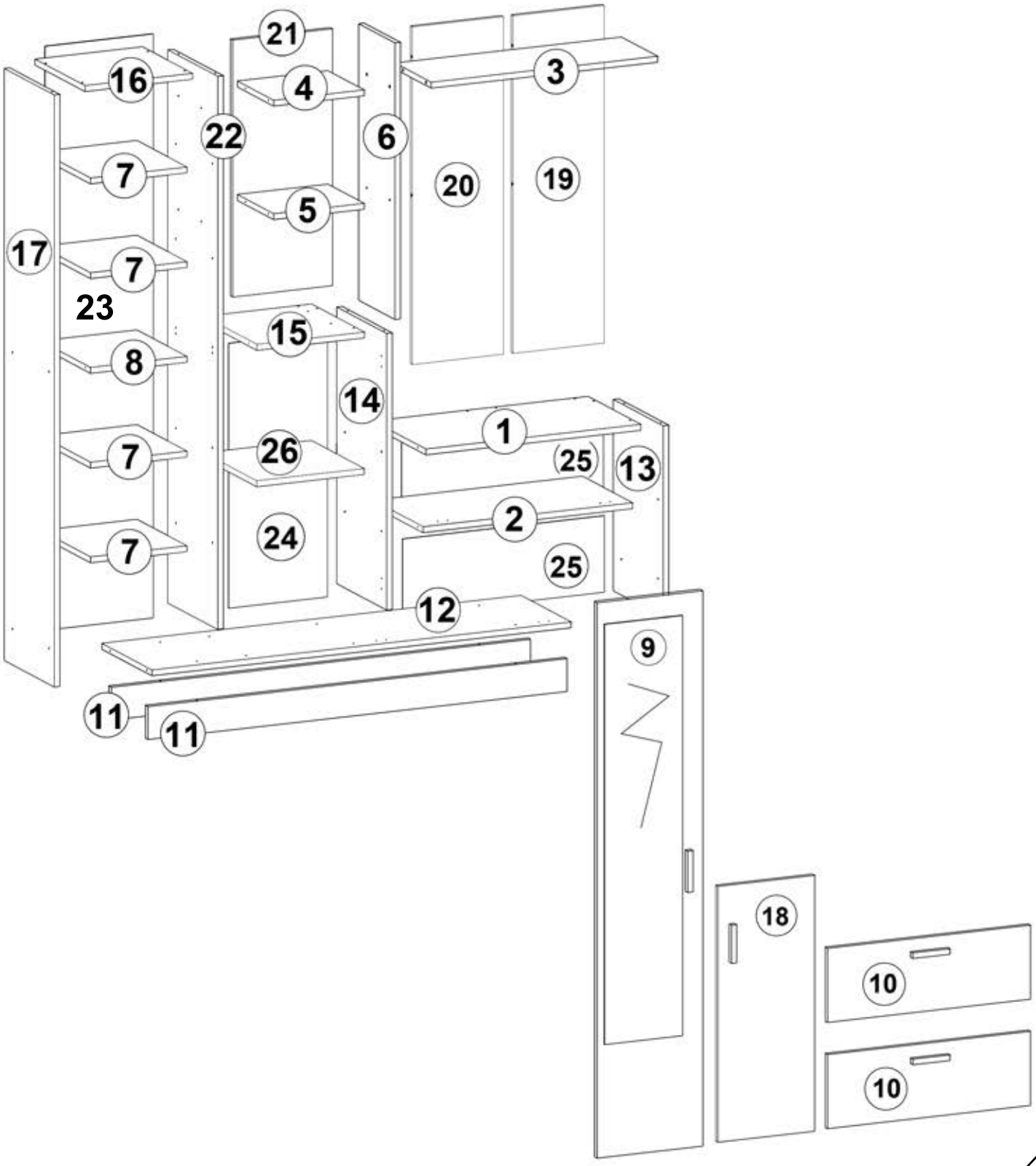

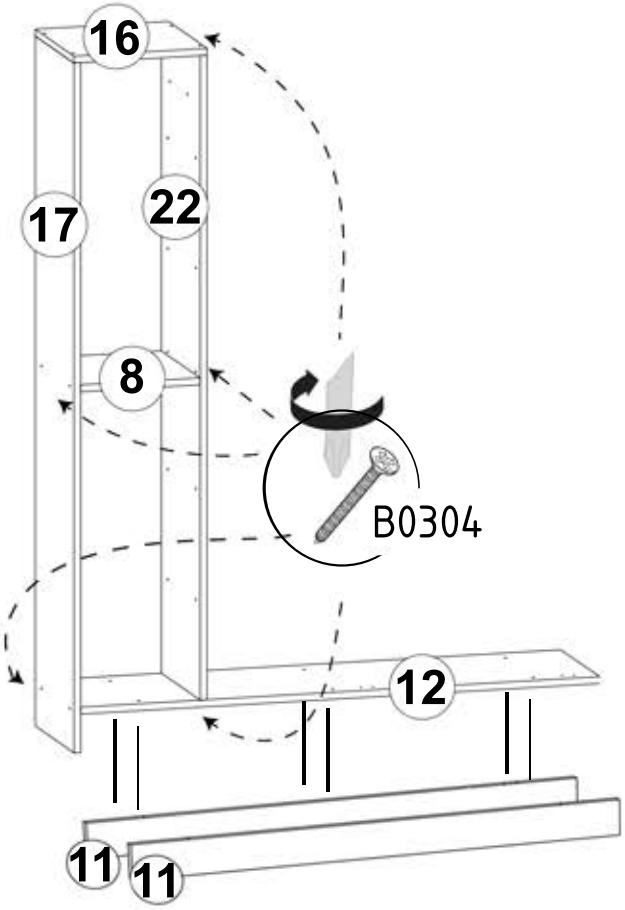
16
17
22
8
B0304
12
11
11

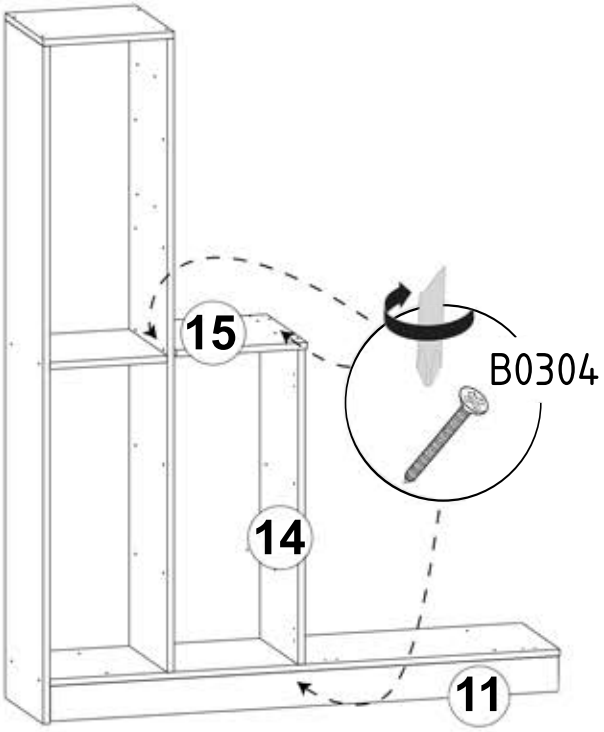
15
B0304
14
11

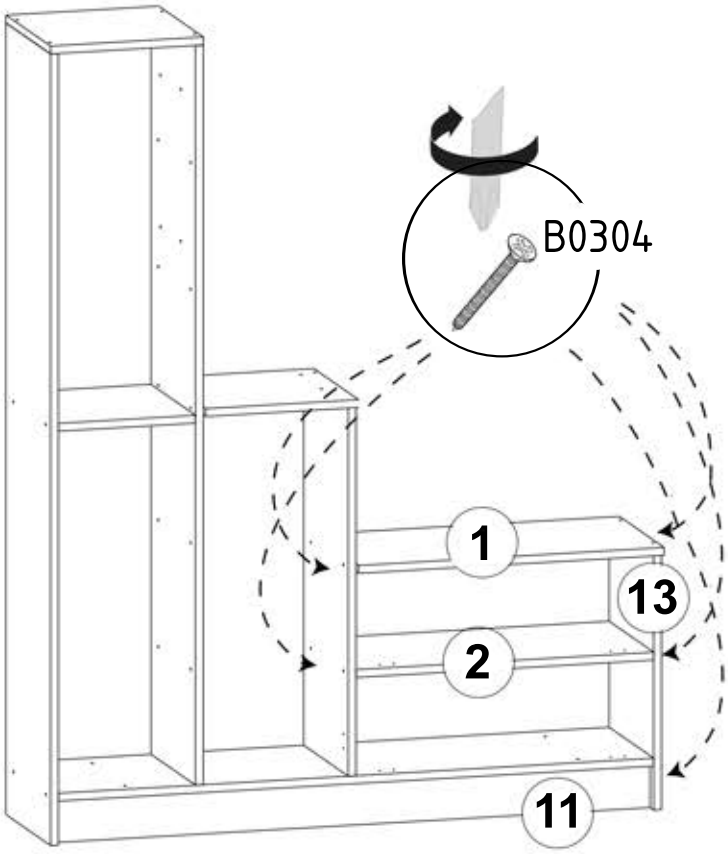
B0304
1
13
2
11

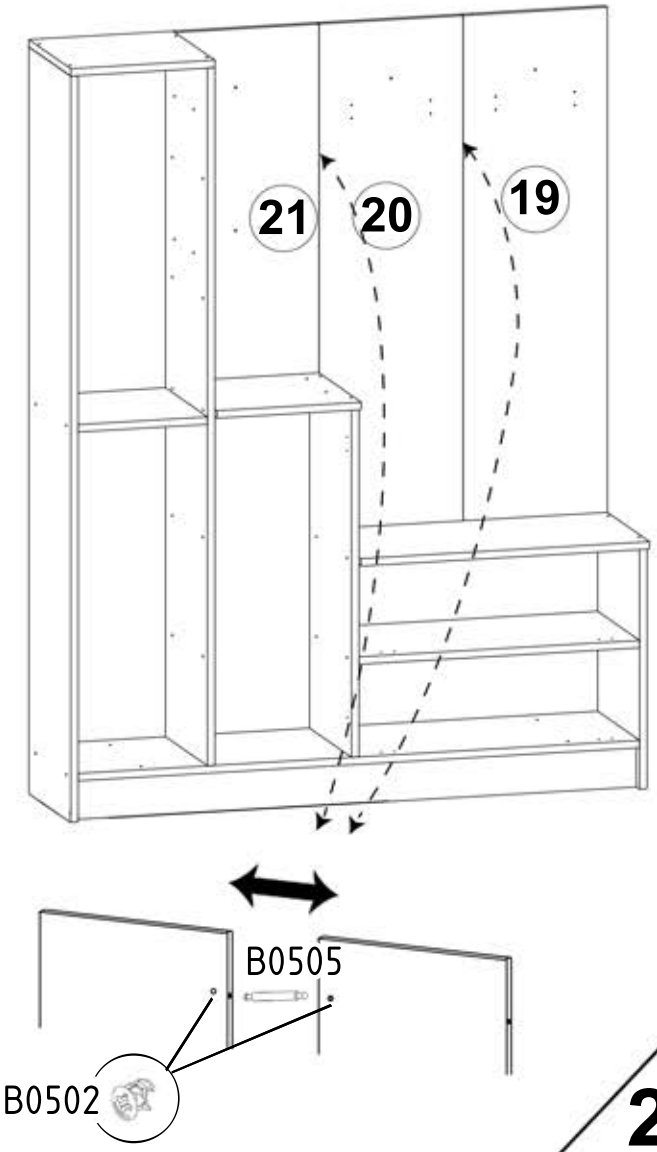
21
20
19
B0505
B0502

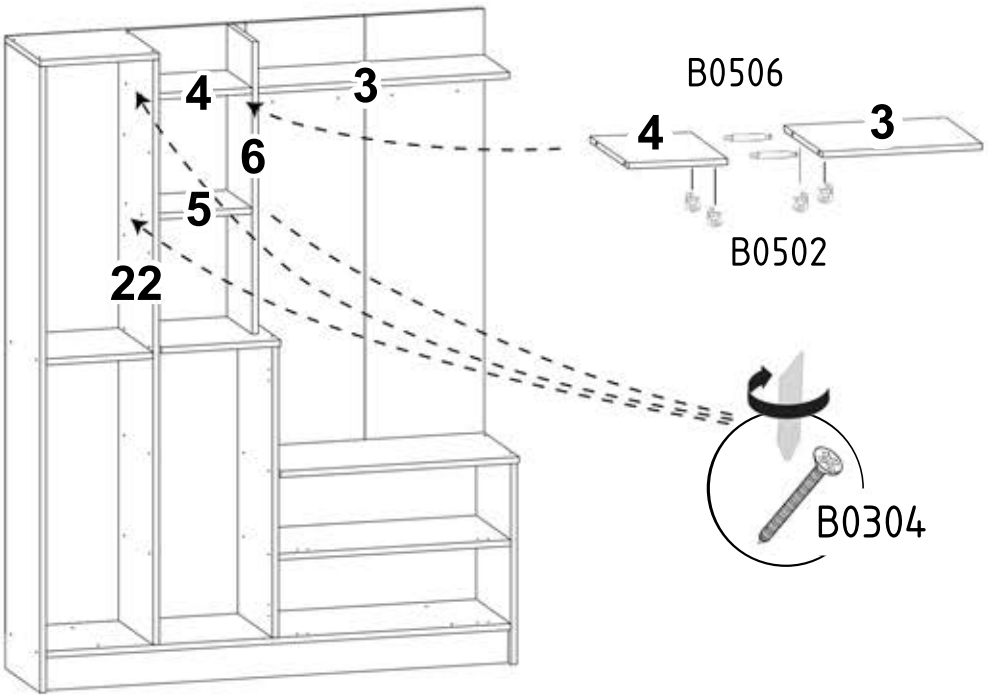
4
3
6
5
22
B0506
4
3
B0502
B0304

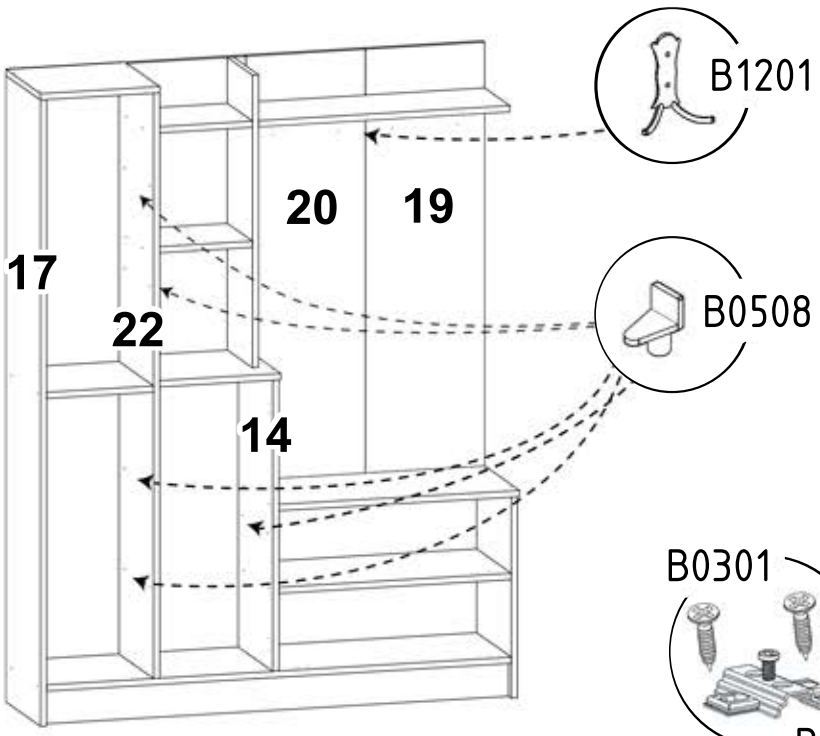
B1201
20
19
17
22
B0508
14

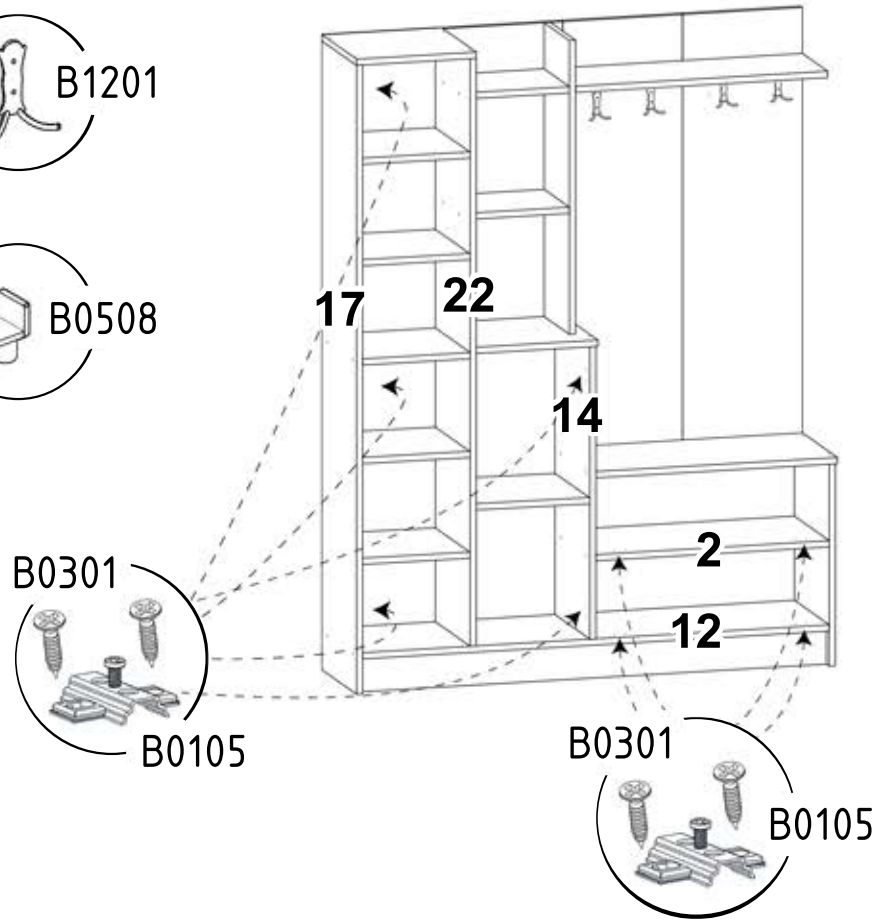
17
22
14
2
12
B0301
B0105
B0301
B0105

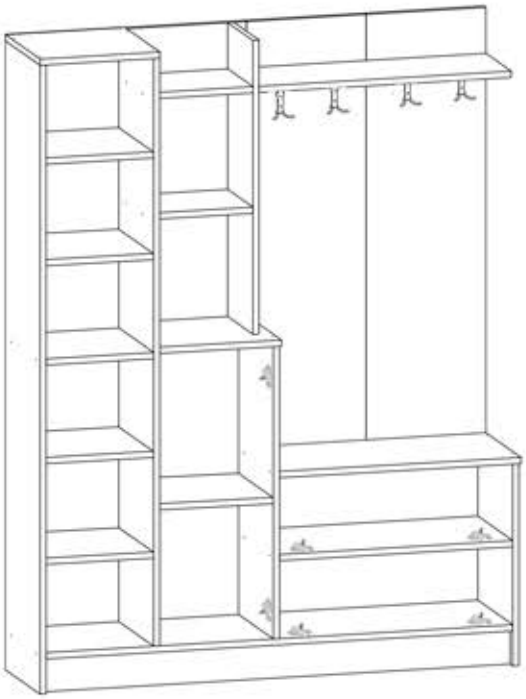

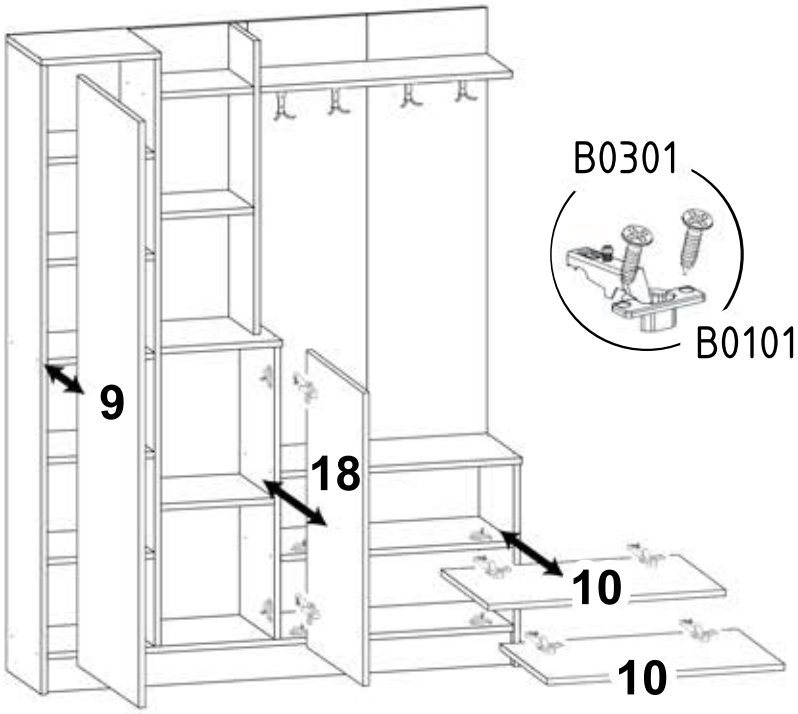
B0301
B0101
9
18
10
10

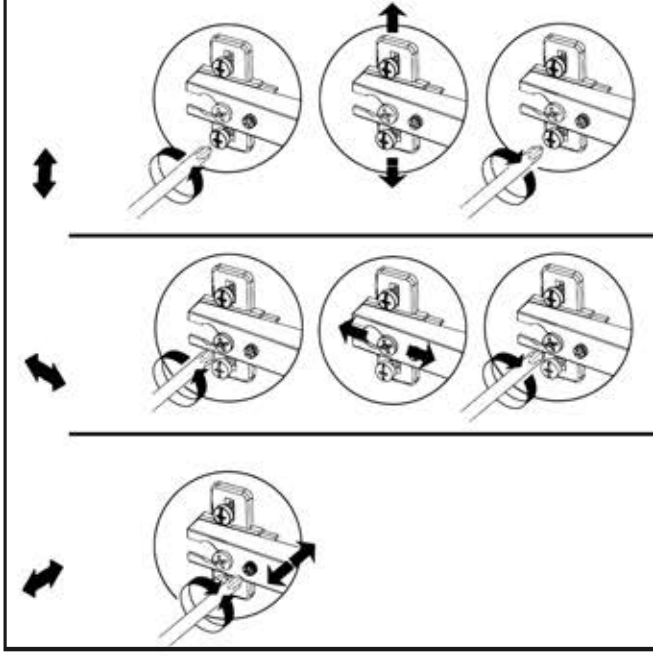

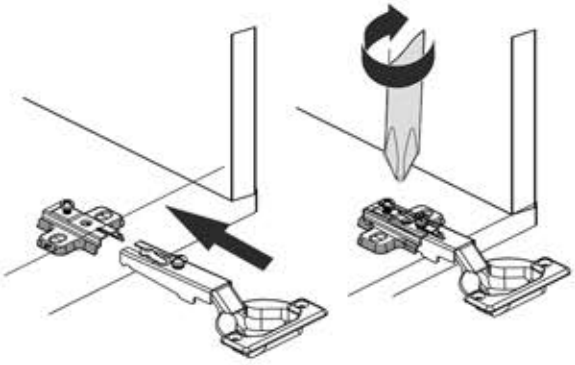

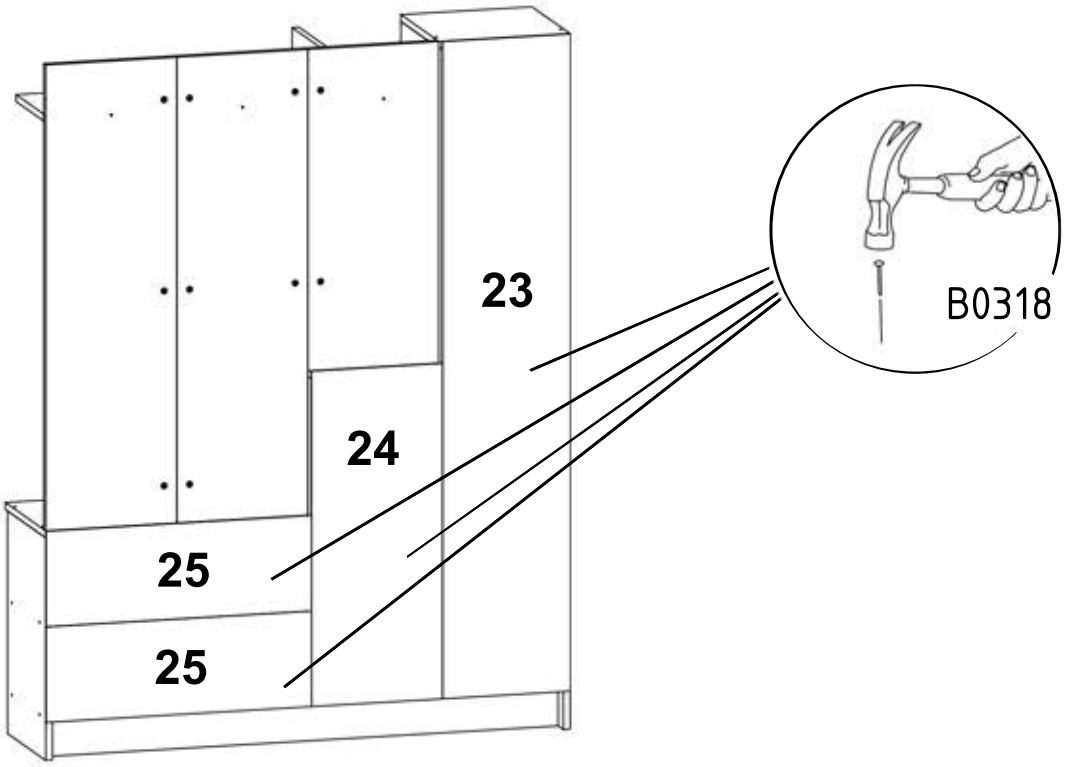
23
24
25
25
B0318