KINGSTON

TO ORDER PARTS, CALL: 1-877-252-7277
www.kingstonbrass.com

# VTRO535323

## 53" Acrylic Freestanding Tub with Drain

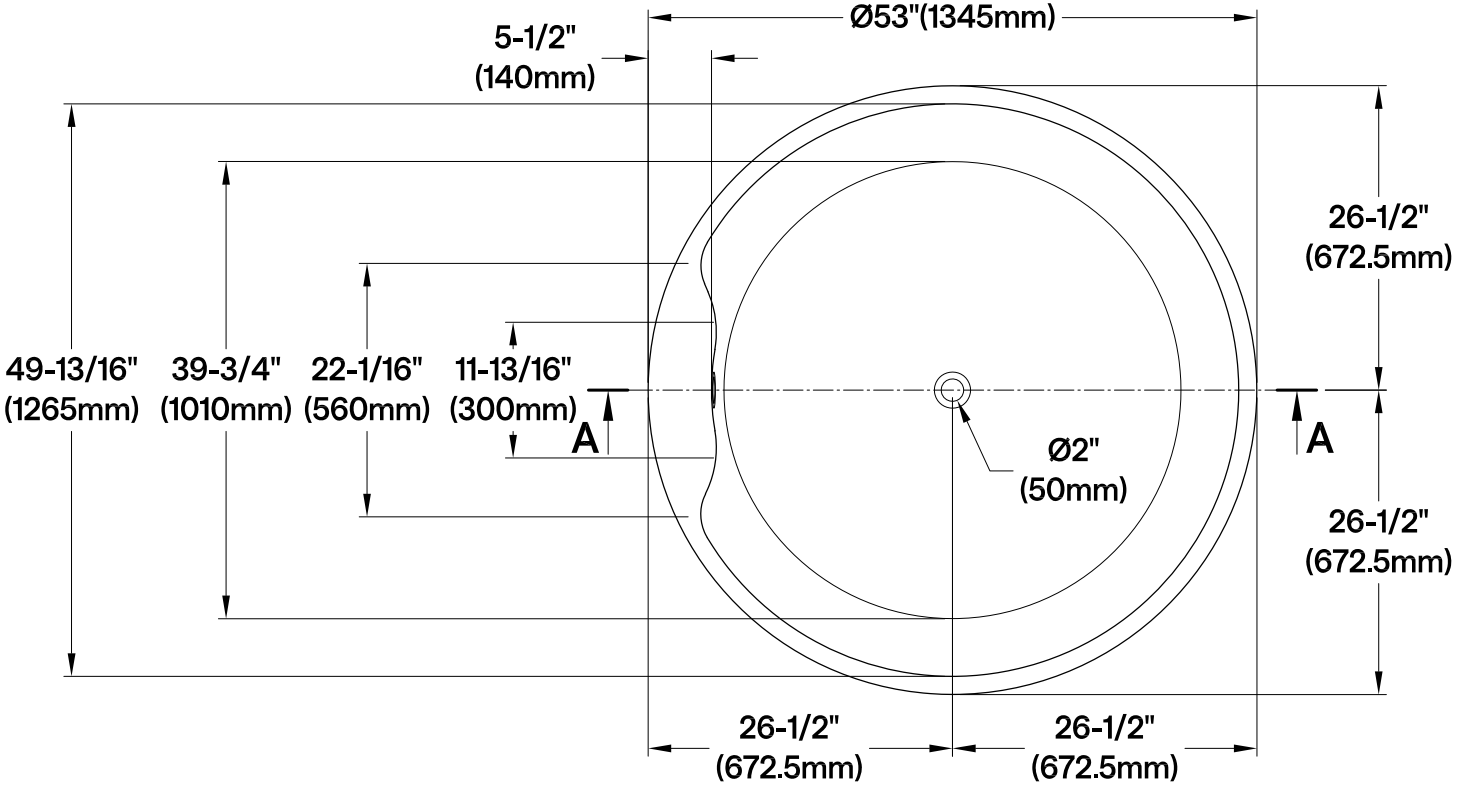


M12 x 75 (6 pcs)

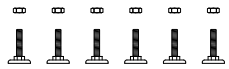

Drain Hole Size
SCALE (3:1)

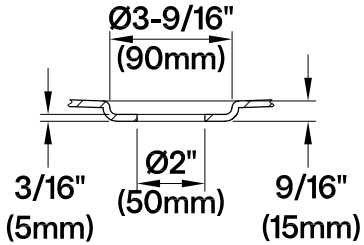


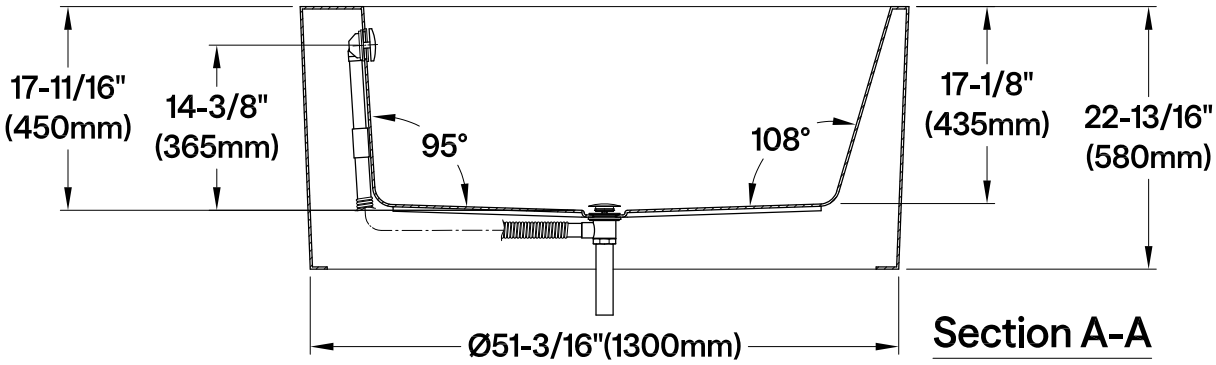


Section A-A

2025-08-A