Skysea-T

YY033-150001

Information

Brand Name	TONA	Model	YY033-150001
Product Name	Bathtub	Specification	1500*780*580mm
Material	Acrylic	N.kg	33.0kg
Color	White Glossy	G.kg	37.5kg
Production Proocess	Seamiess butt joint	G.kg(include pallet)	360kg
Installation Method	Freestanding	Volume	0.678m³
Faucet	Without faucet	Drain	130mm
Component	Bathtub+Pop up+Overflow hole+Drain Pipe	Capacity	230L
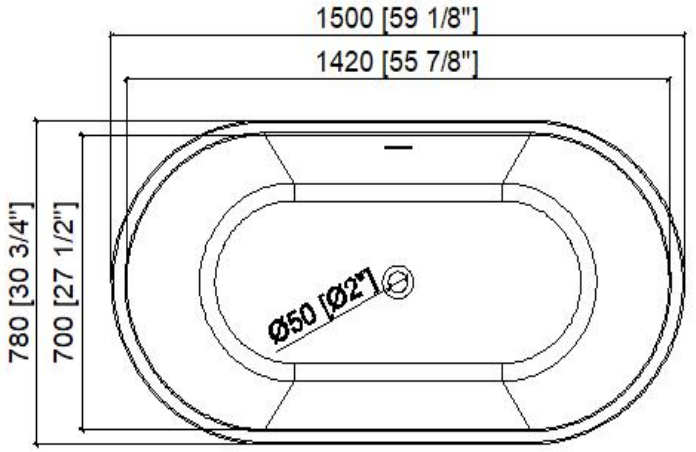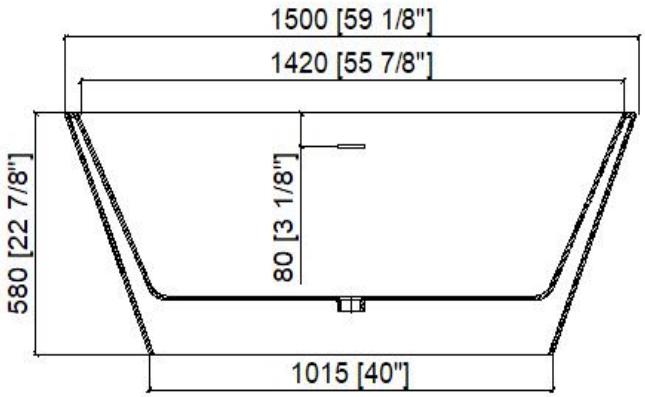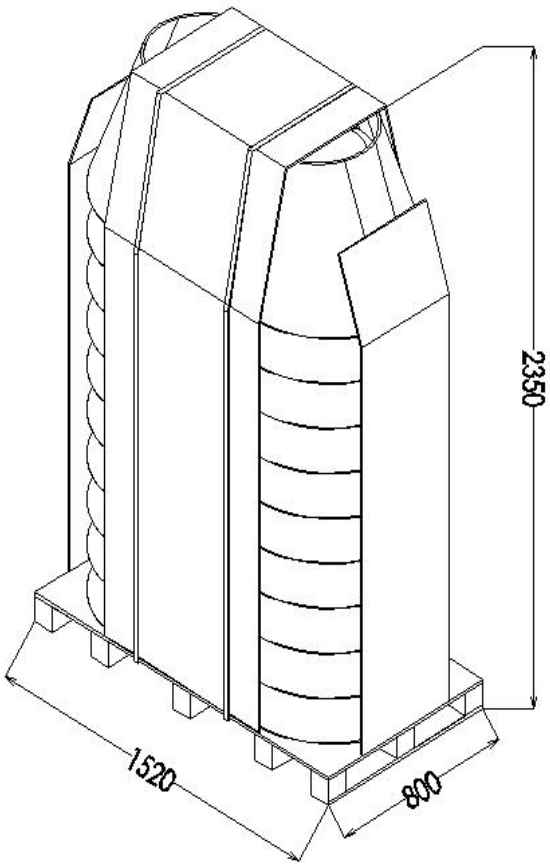
Technical drawing