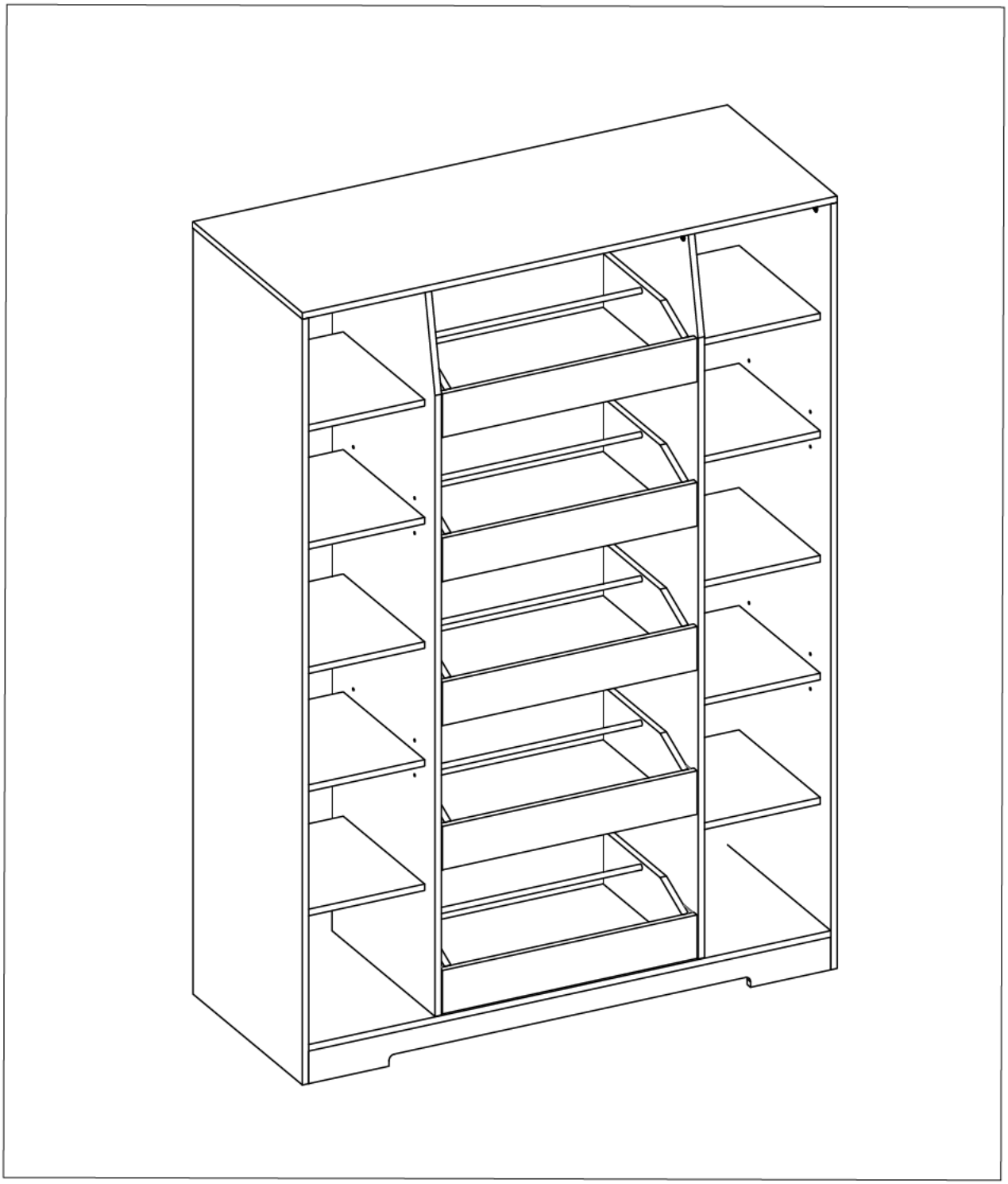

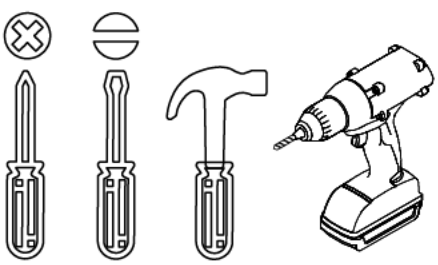

Tools required
(not included)

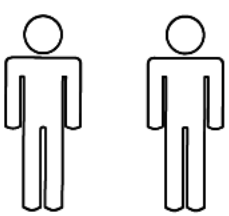

2 people for assembly

Safety and Care Advice

Important – Please read these instructions fully before starting assembly

• Check you have all the components and tools listed on the following pages.

• Remove all fittings from the plastic bags and separate them into their groups.

• Keep children and animals away from the work area, small parts could choke if swallowed.

• Make sure you have enough space to layout the parts before starting.

• During assembly do not stand or put weight on the product, this could cause damage.

• Assemble the item as close to its final position (in the same room) as possible.

• Assemble on a soft level surface to avoid damaging the unit or your floor.

• Parts of the assembly will be easier with 2 people.

• To reduce the likelihood of damaging your product please ensure that your power drill is set on a low torque setting.

Care and maintenance

• Only clean using a damp cloth and mild detergent, do no use bleach or abrasive cleaners.

• From time to time check that there are no loose screws on this unit.

• This product should not be discarded with household waste. Take to your local authority waste disposal centre.

Handy Hints

• Assemble all parts and bolts loosely during assembly, only once the product is complete should you fully tighten the bolts

• Regularly check and ensure That all bolts and fittings are tightend properly.

WARNING

In order to help prevent overturning - please follow these instructions

To help prevent product toppling over please follow the below steps:-

Use the anti tip stap or wall fixing method provided (if applicable)
Do not allow children to climb or hang on the furniture
Do not open more than one drawer at a time
Do not place heavy items in the top drawers
Do not place heavy items on top of the furniture, unless the furniture has been designed for this purpose

Please note that only the anti tip strap is provided.
You will need to provide wall plugs and screws applicable for your wall type

Using Camlocks

Step 1

Connect the malecamlock as diected inthe assemblyinstructionsusing a scewdriver.

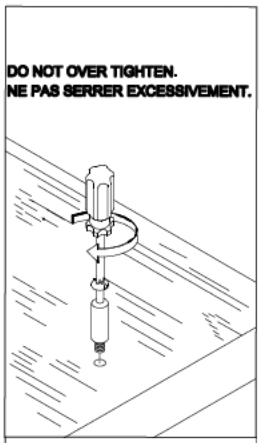

Step 2

Push the male camlockinto the entry hole.

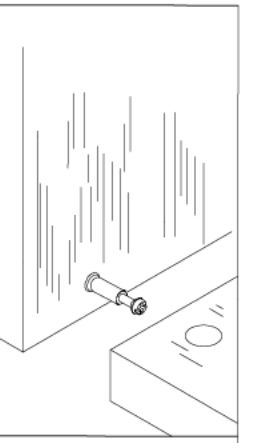

Step 3

Insert the femle camlock as shown in theinstruction.
Note:ensure that thearrow on the top of thecamlock points towardsthe entry hole for themale camlock.

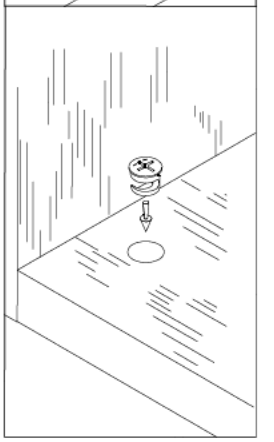

Step 4

Turn the female camlockclockwise with ascrewdriver
You should feel a clickwhen the camlock islocked in place.
The joint is now secure,

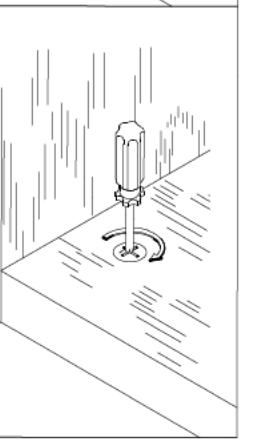

⚠ WARNING

Children have died from
furniture tipover. To reduce the risk of furniture tipover:

·ALWAYS install tipover restraint provided.
·NEVER put a TV on this product.
·NEVER allow children to stand. climb or hang on drawers, doors, or shelves.
·NEVER open more than one drawer at a time.
·Place heaviest items in the lowest drawers.

This is a permanent label.
Do not remove!

Important Notice:

If you encounter any issues with the product, we kindly request you to promptly contact the customer service of the store on Amazon. Specifically, if you need to initiate a product return, please reach out to the customer service for assistance. We are dedicated to prioritizing your needs and will efficiently process refunds or arrange for reshipments as necessary. It is important to note that selecting the return address provided on the backend may not be suitable for receiving returns, so we advise against using it directly.

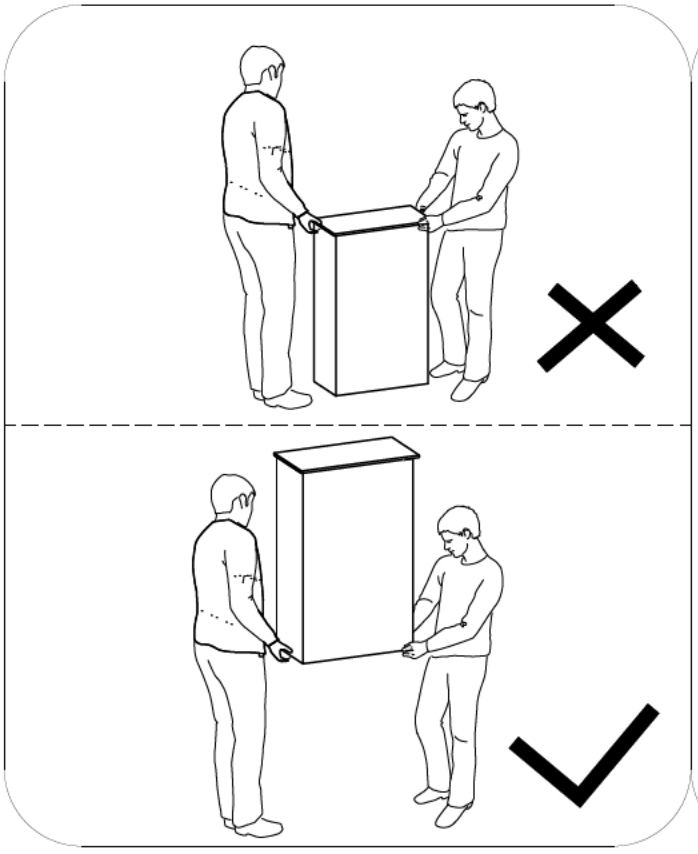

Safety warning for furniture use

1. If you want to move the furniture, the furniture should be moved, not dragged, carefully put gently, to prevent the impact of sharp tools and hard objects.

2, when moving cabinet frame furniture, should move out of the cabinet object, door, drawer seal or take out the drawer directly, lest furniture tilt, parts slide hurt, even damage.

3, when moving, avoid hard and drag, so as to avoid loose foot plate and tenon, furniture must be lifted a little slowly move.

4, tables and chairs can not be lifted the surface, easy to fall off, should be lifted from both sides of the table and the chair face, the cabinet had better unload the cabinet door and lift, can reduce the weight, but also avoid the cabinet door activity.If you need to move the particularly heavy furniture, you can use a soft rope into the furniture chassis to move again.

PRODUCT ASSEMBLY

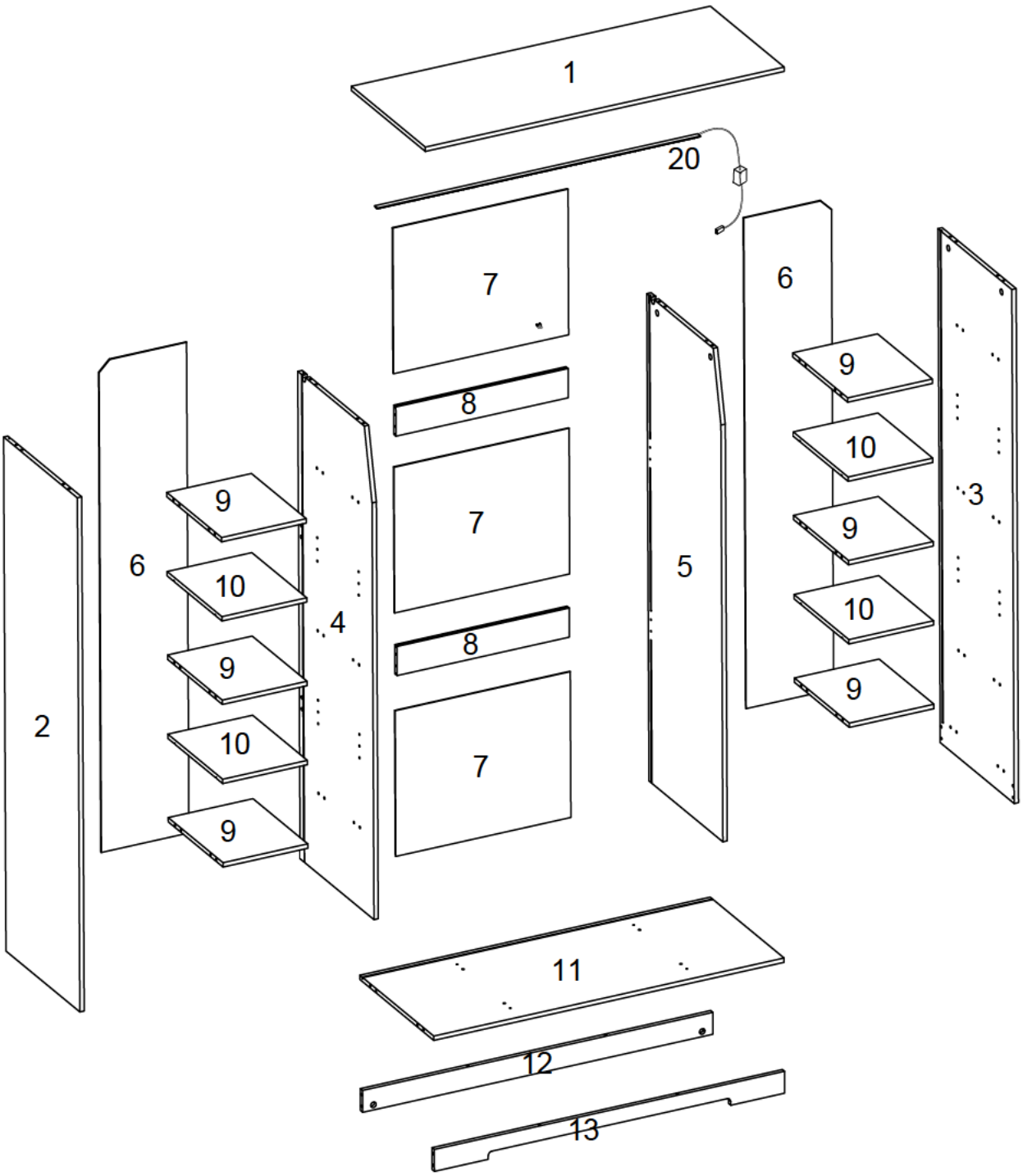

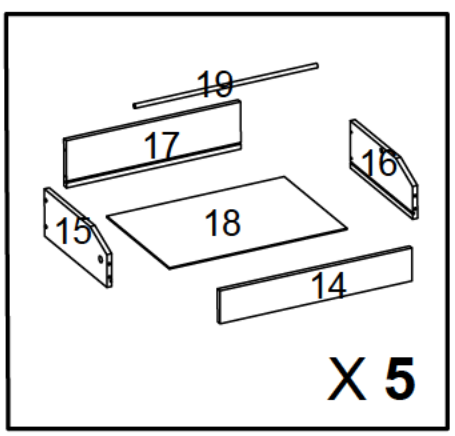

Components - Fittings

Please check you have all the panels listed below

Note: **The quantitie below are the correcet amount to complete the assembly. In some cases more fittings may be supplied than are required.**

A		50 pcs +5 pcs	B	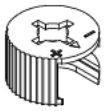	50 pcs +5 pcs
C	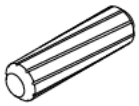	58 pcs +5 pcs	D	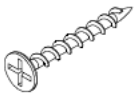	32 pcs +3 pcs
E		51 pcs +4 pcs	F		3 pcs
G	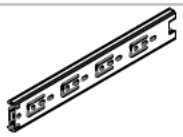	10 pcs	H		2 set
I	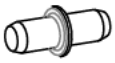	16 pcs +1 pcs	J		20 pcs +2 pcs
K		4 pcs			

Step 1

A		10 pcs

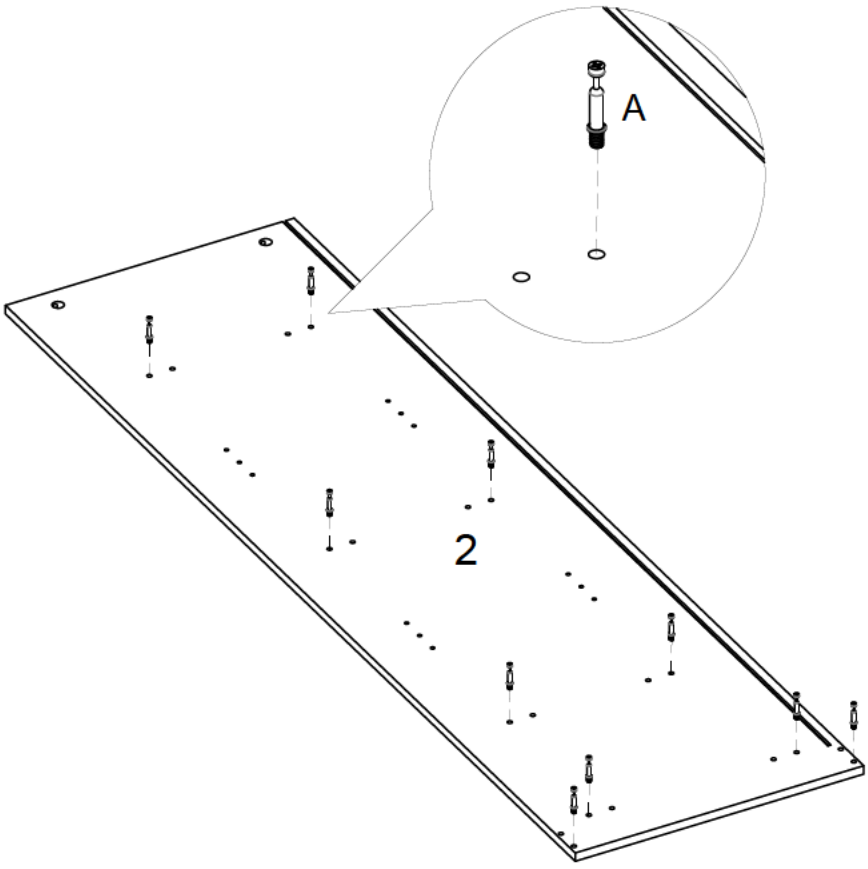

Step 2

A		10 pcs

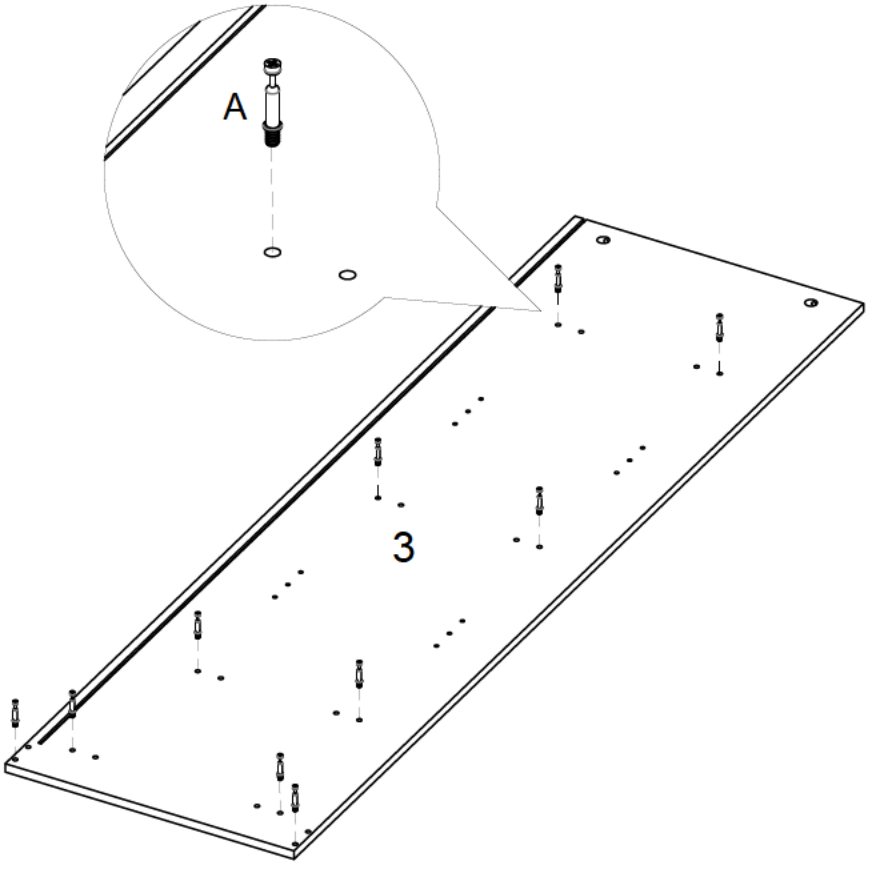

Step 3

G		10 pcs

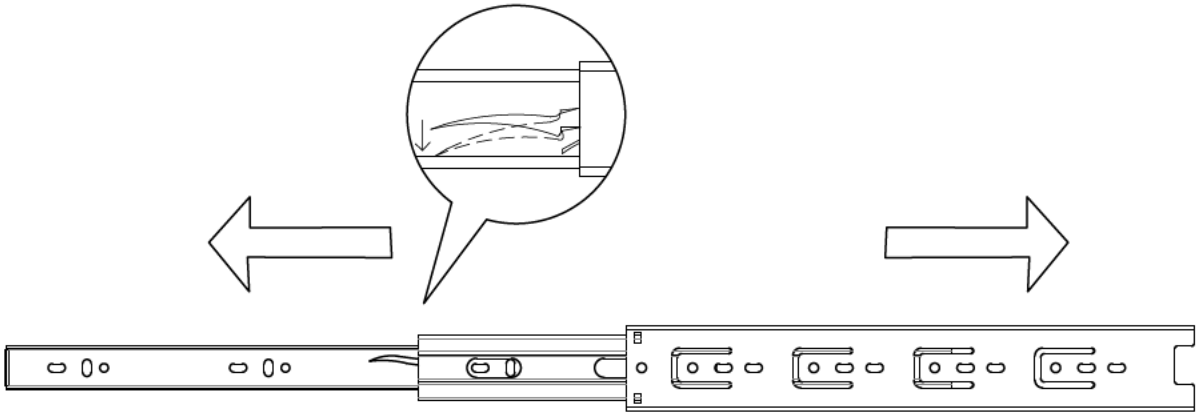

X 10

Step 4

G		5 pcs
A		6 pcs
E		10 pcs

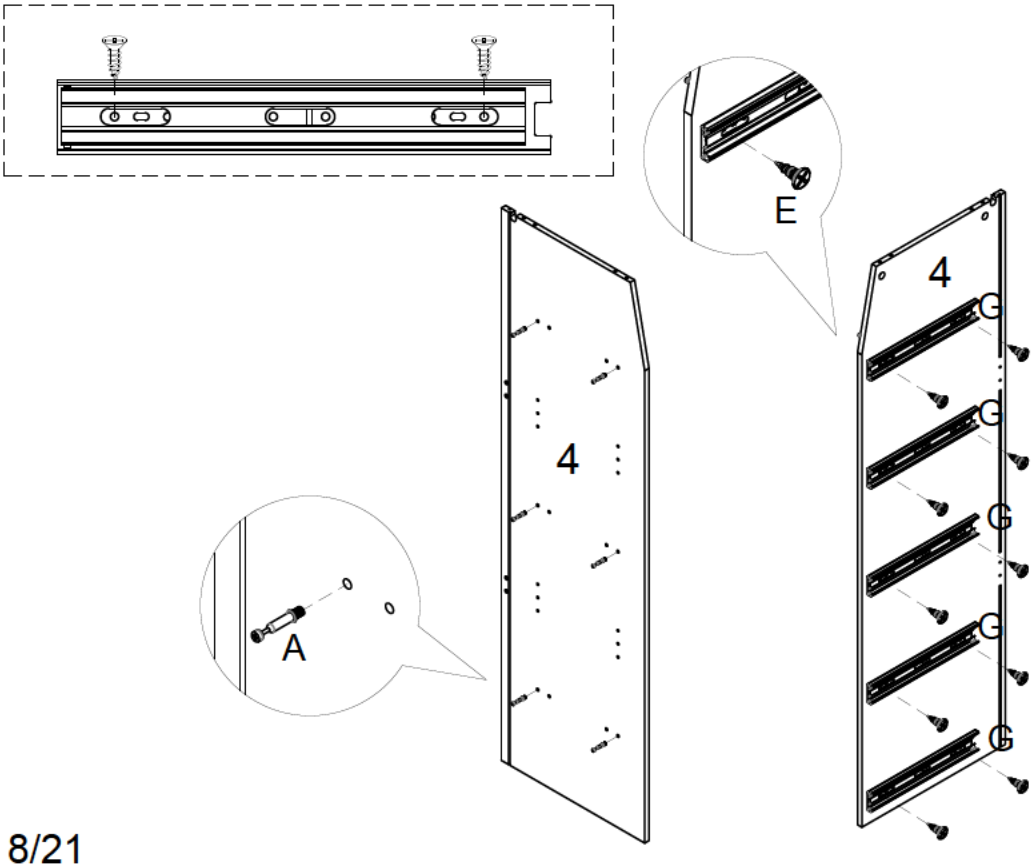

Step 5

G		5 pcs
A		6 pcs
E		10 pcs

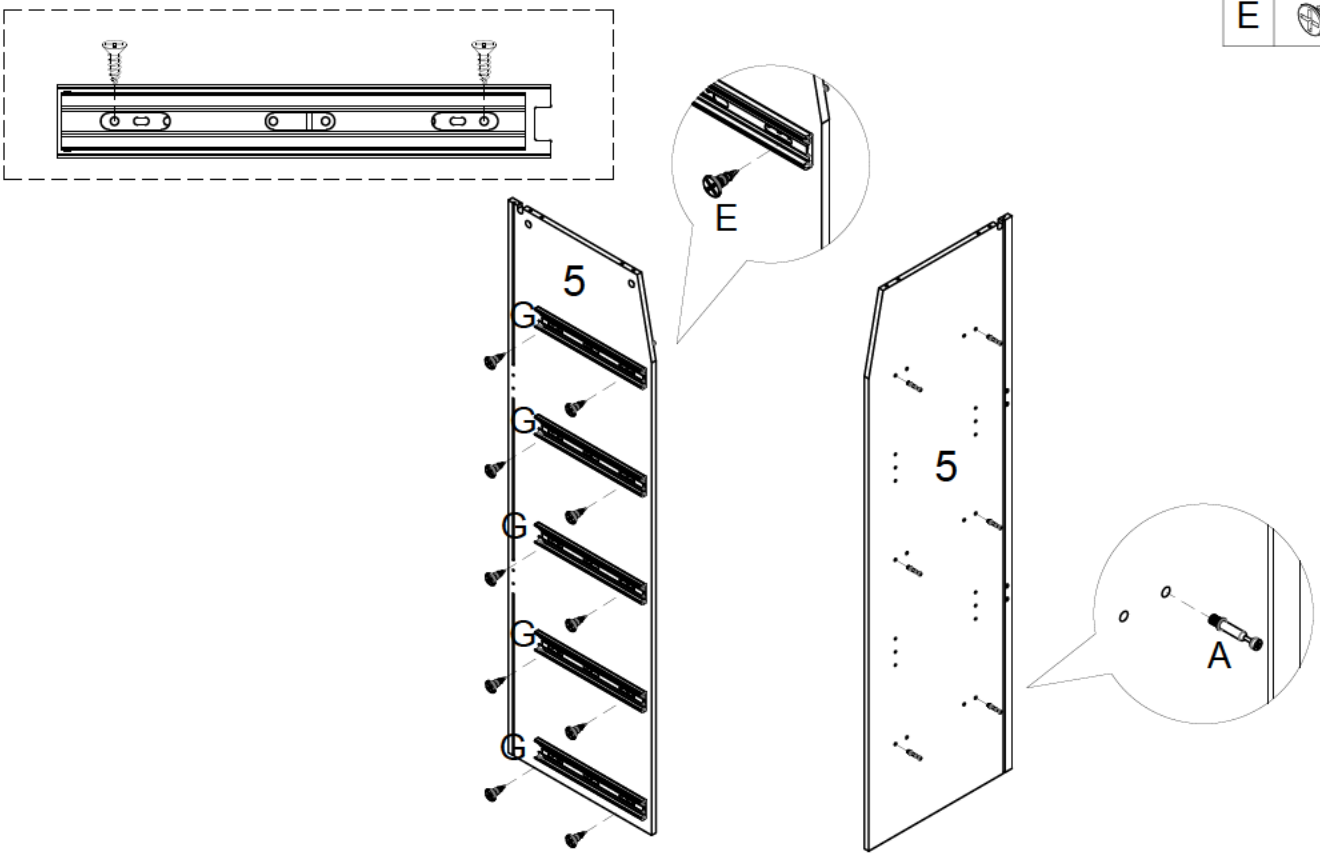

Step 6

K		4 pcs
E		4 pcs

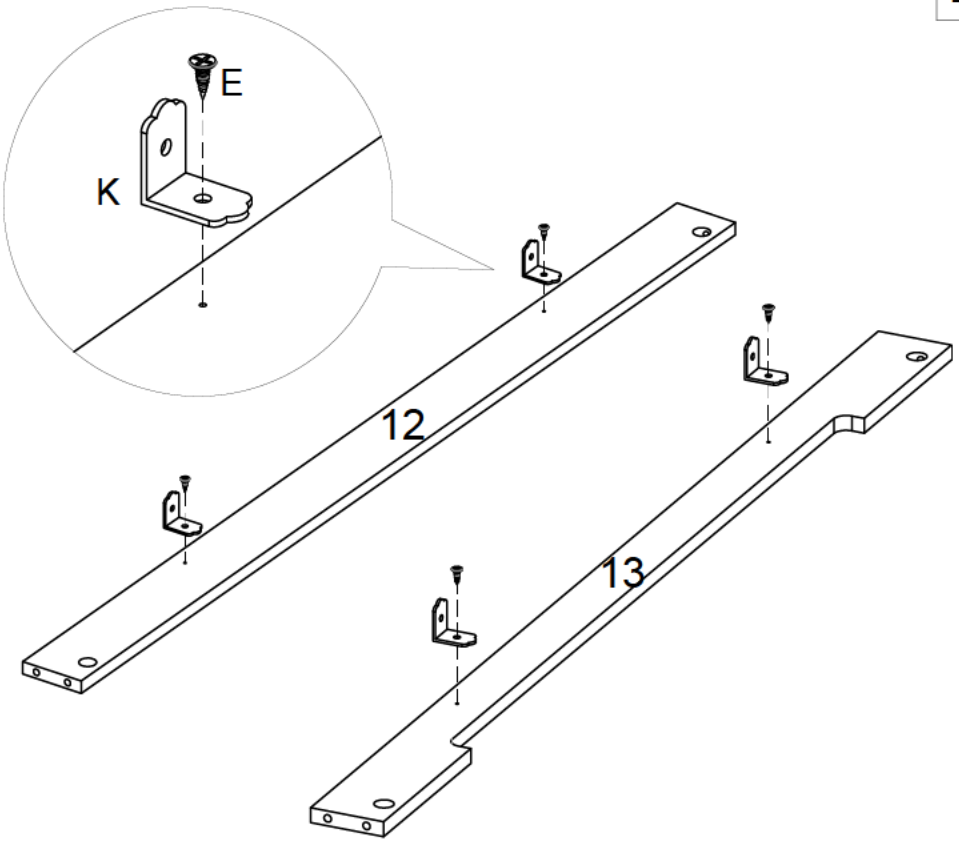

Step 7

E		4 pcs
C		4 pcs

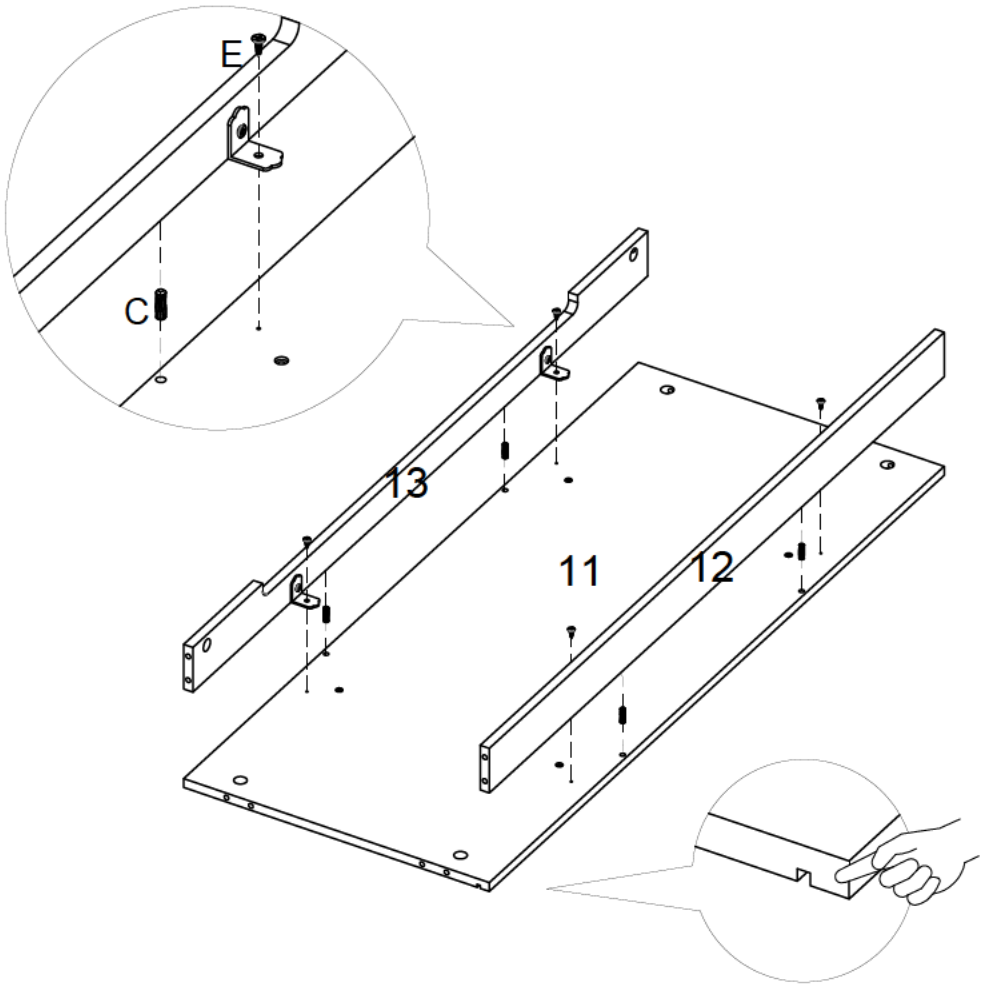

Step 8

C		4 pcs
D		4 pcs

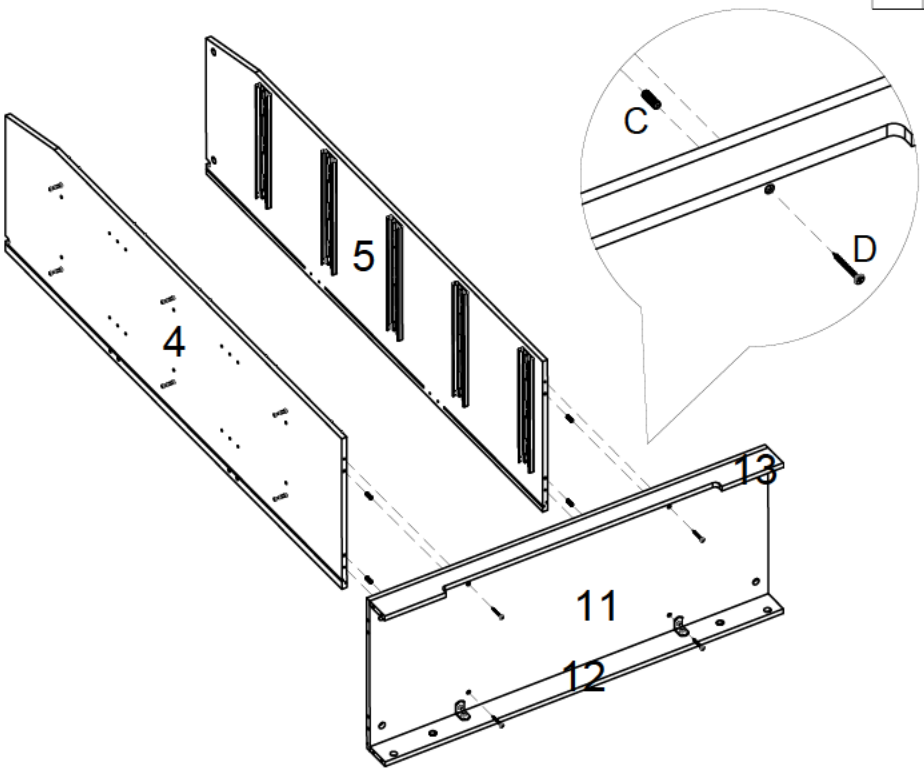

Step 9

B		6 pcs
C		6 pcs

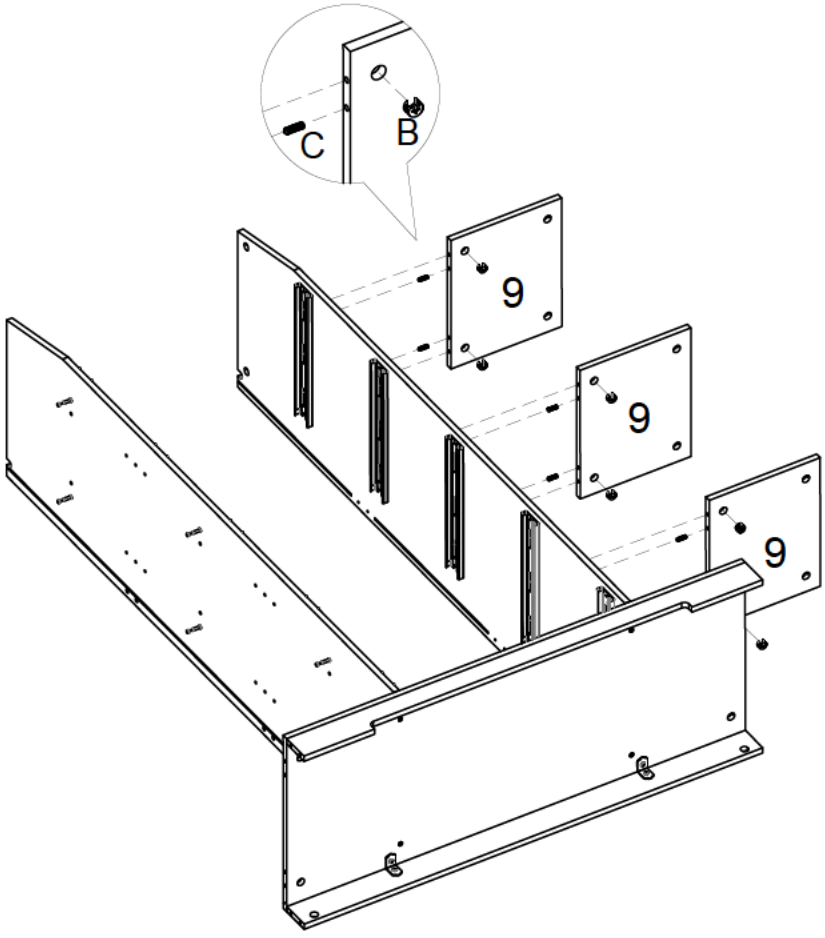

Step 10

B		10 pcs
C		10 pcs

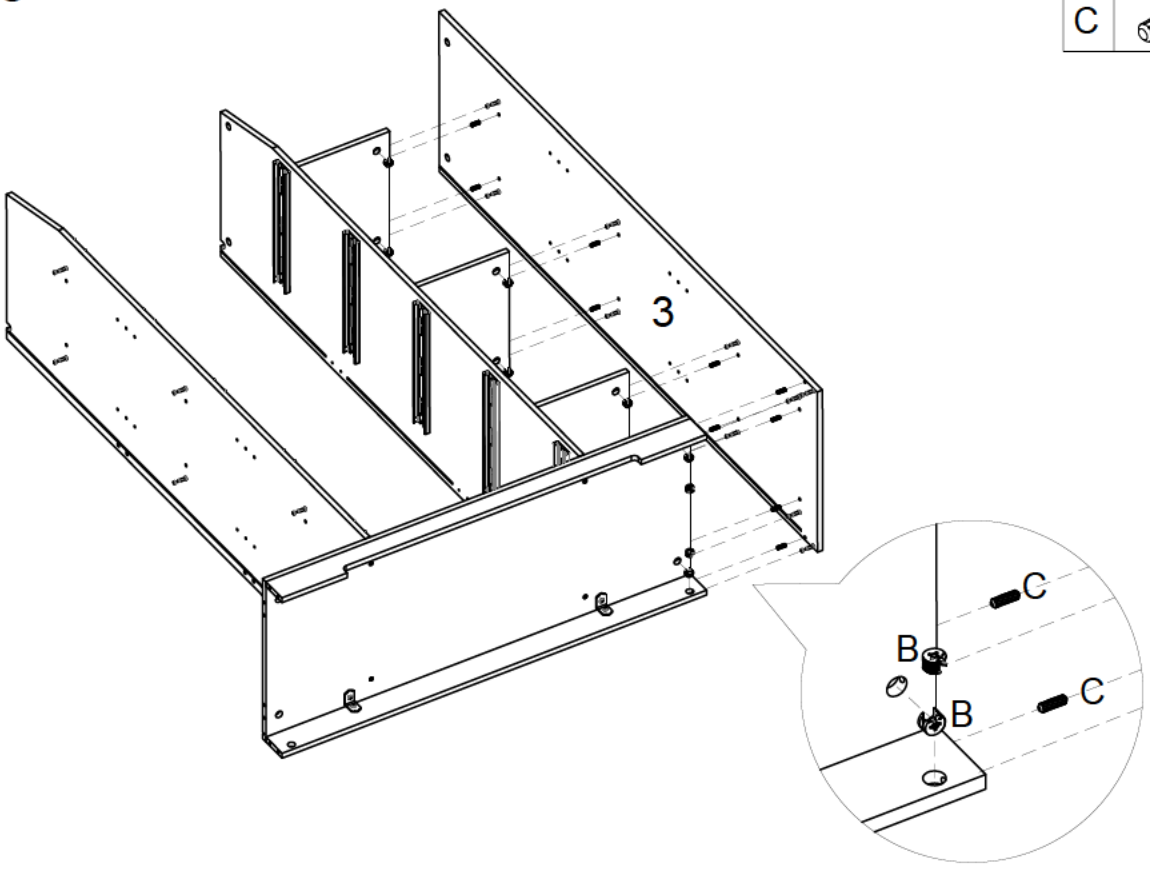

Step 11

B		6 pcs
C		6 pcs

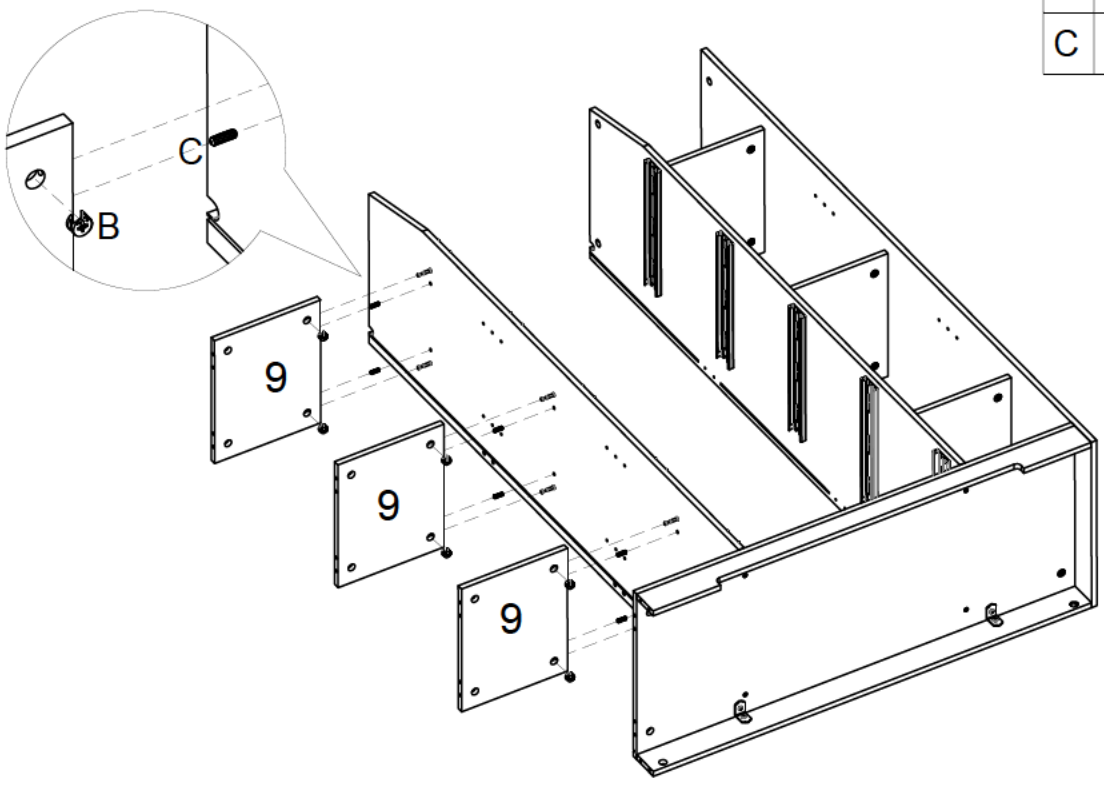

Step 12

B		10 pcs
C		10 pcs

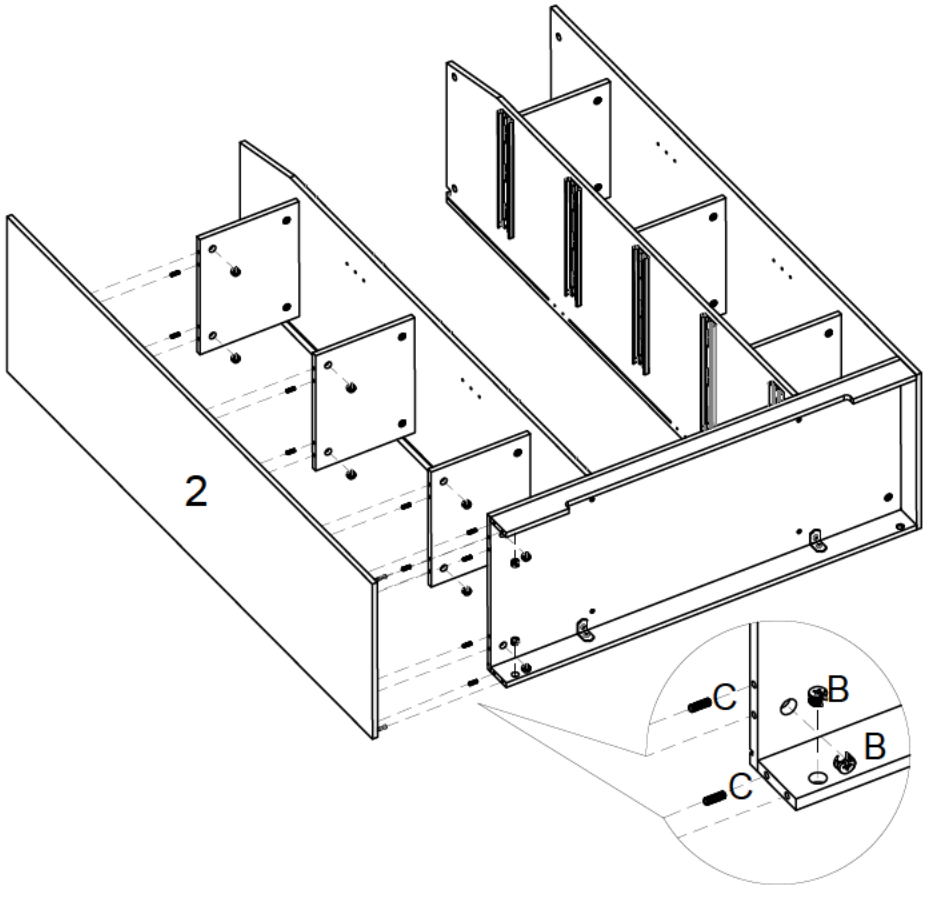

Step 13

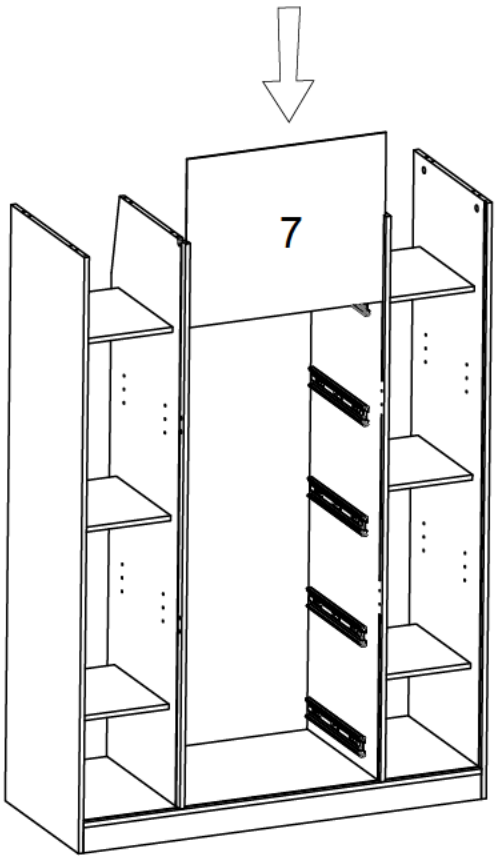

Step 14

D		4 pcs

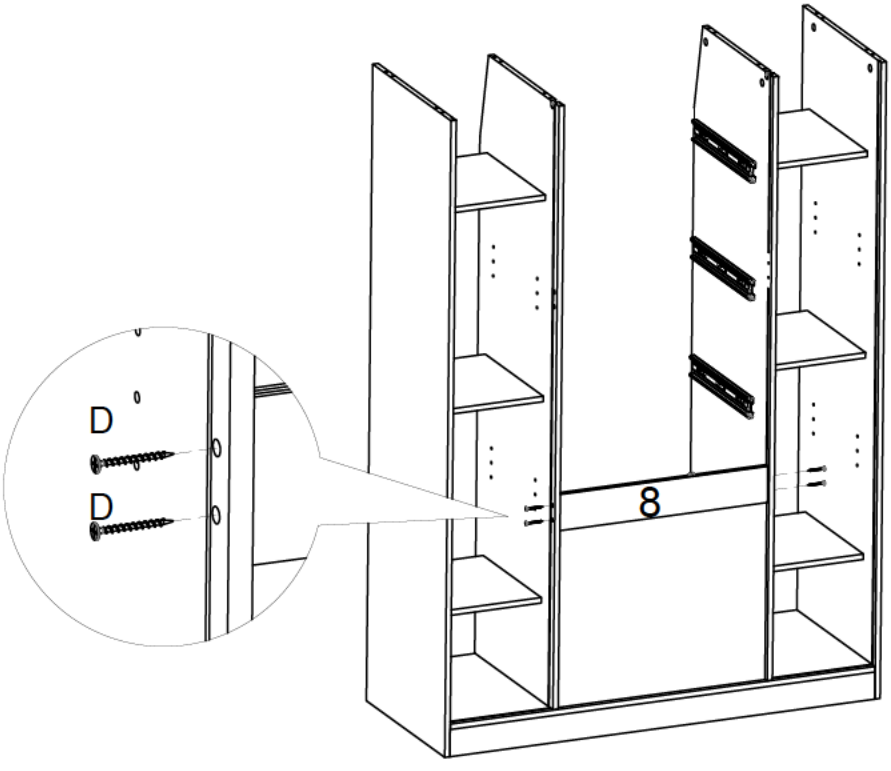

Step 15

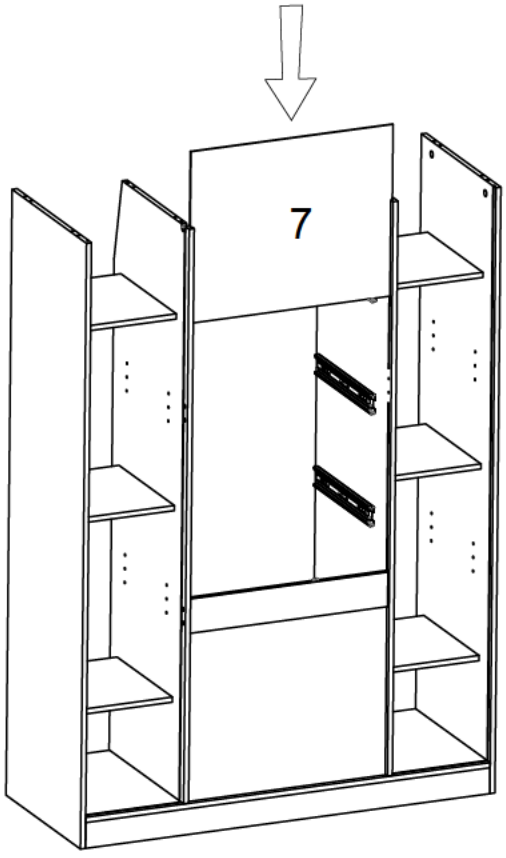

Step 16

D		4 pcs

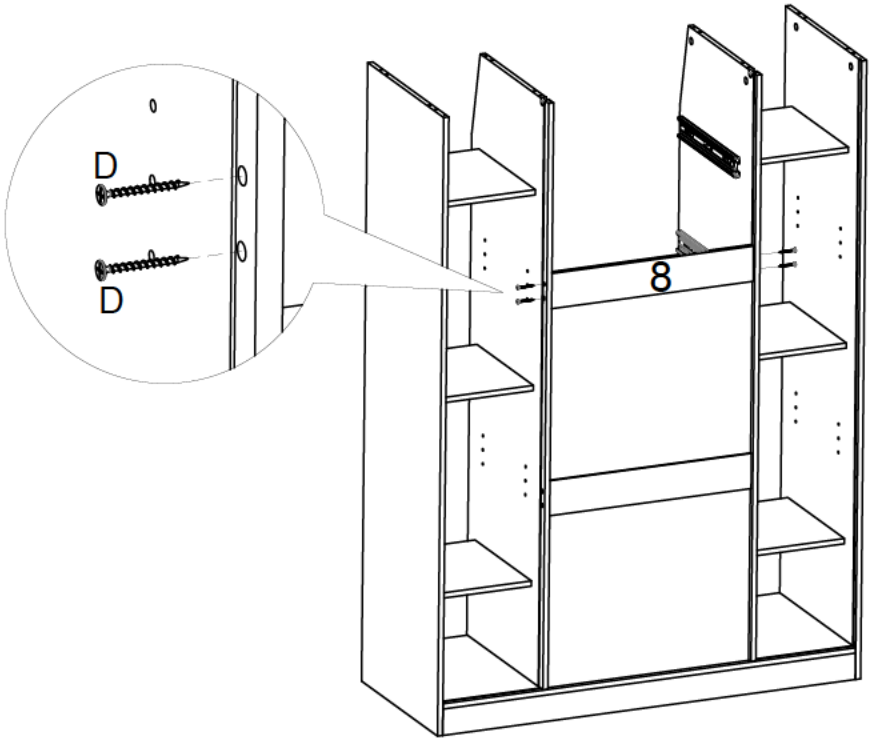

Step 17

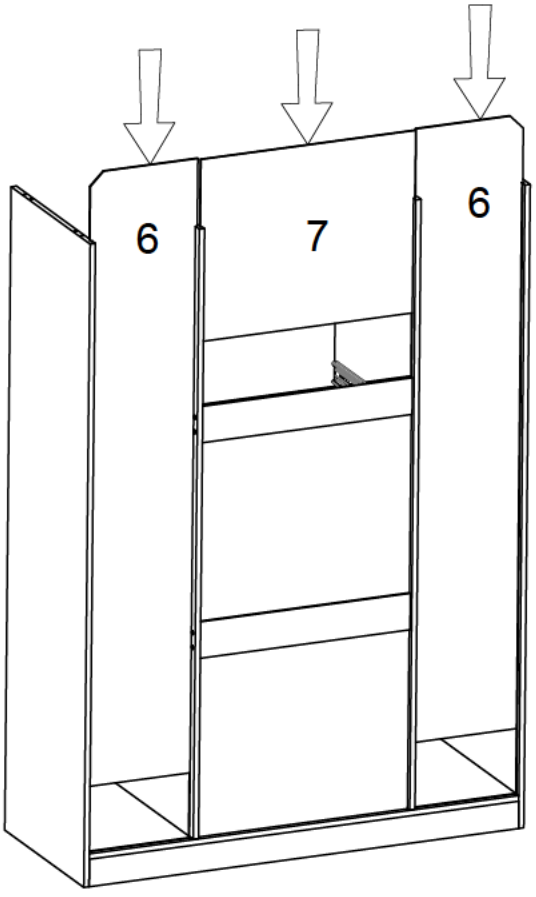

Step 18

F		3 pcs
E		3 pcs
A		8 pcs

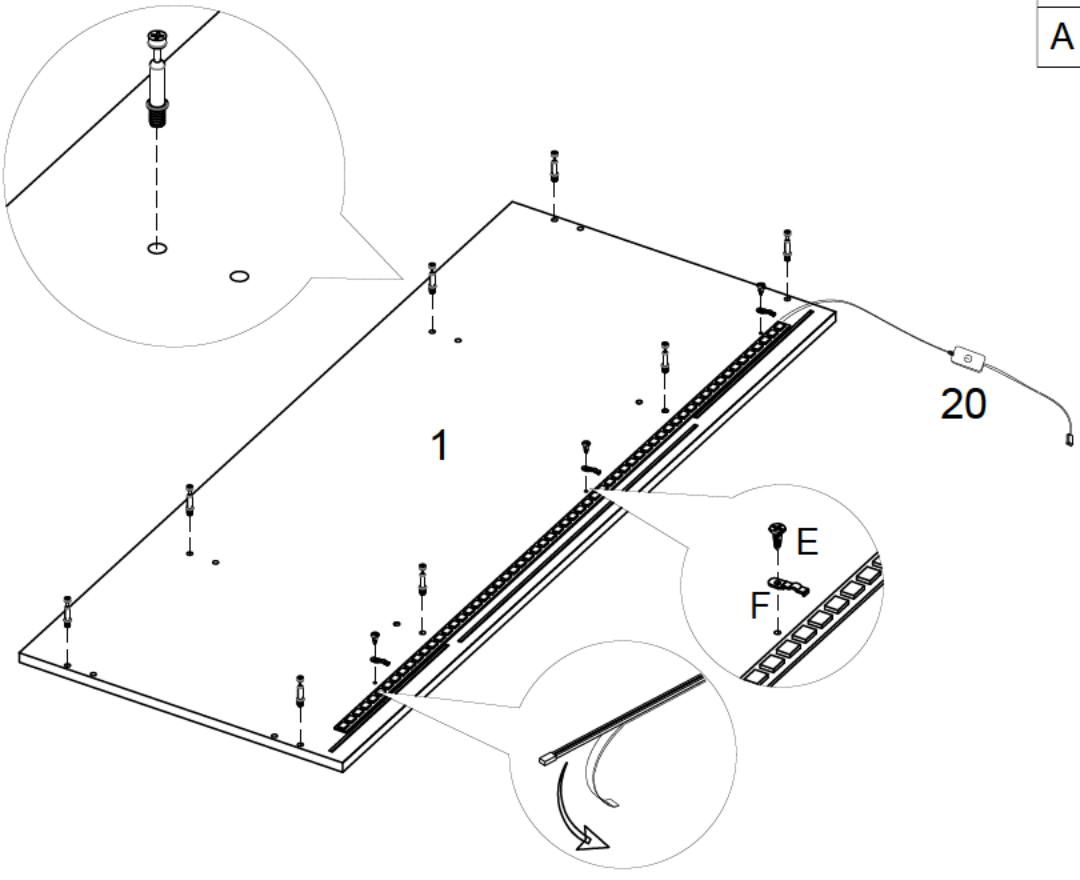

Step 19

B		8 pcs
C		8 pcs

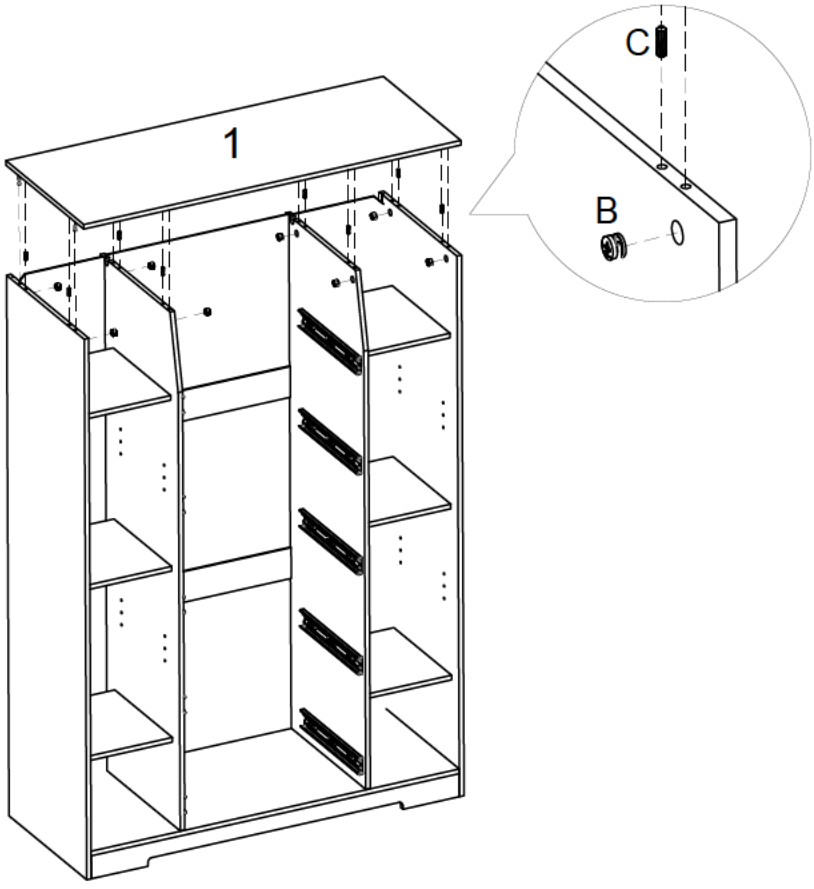

Step 20

J		20 pcs
H		2 pcs

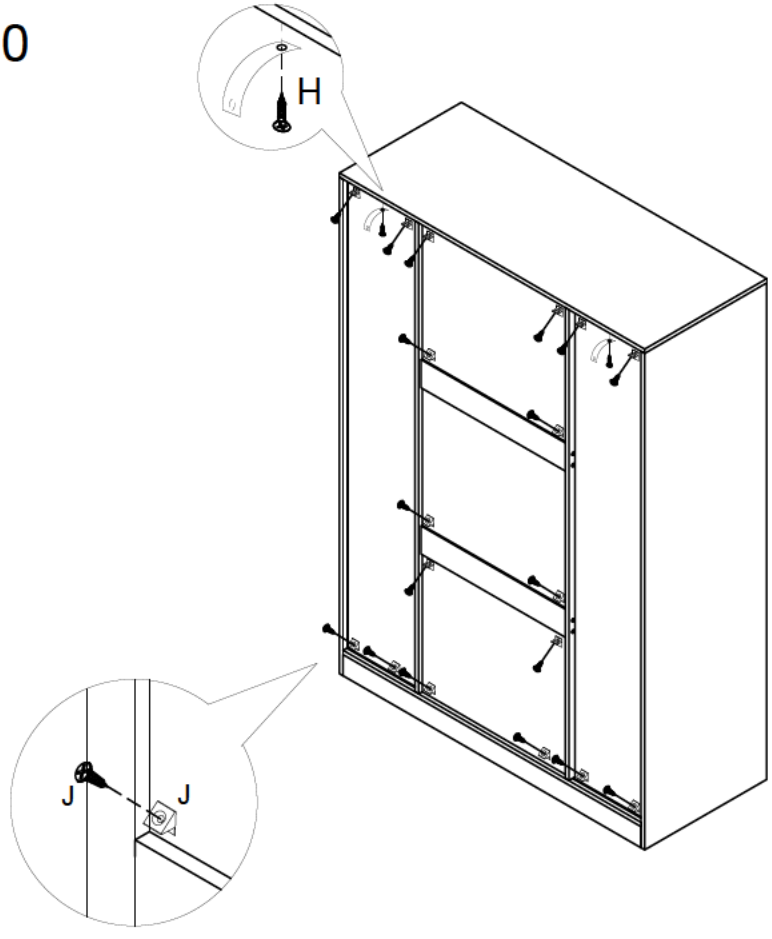

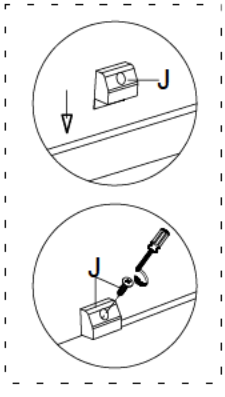

Step 21

I		16 pcs
H		2 pcs

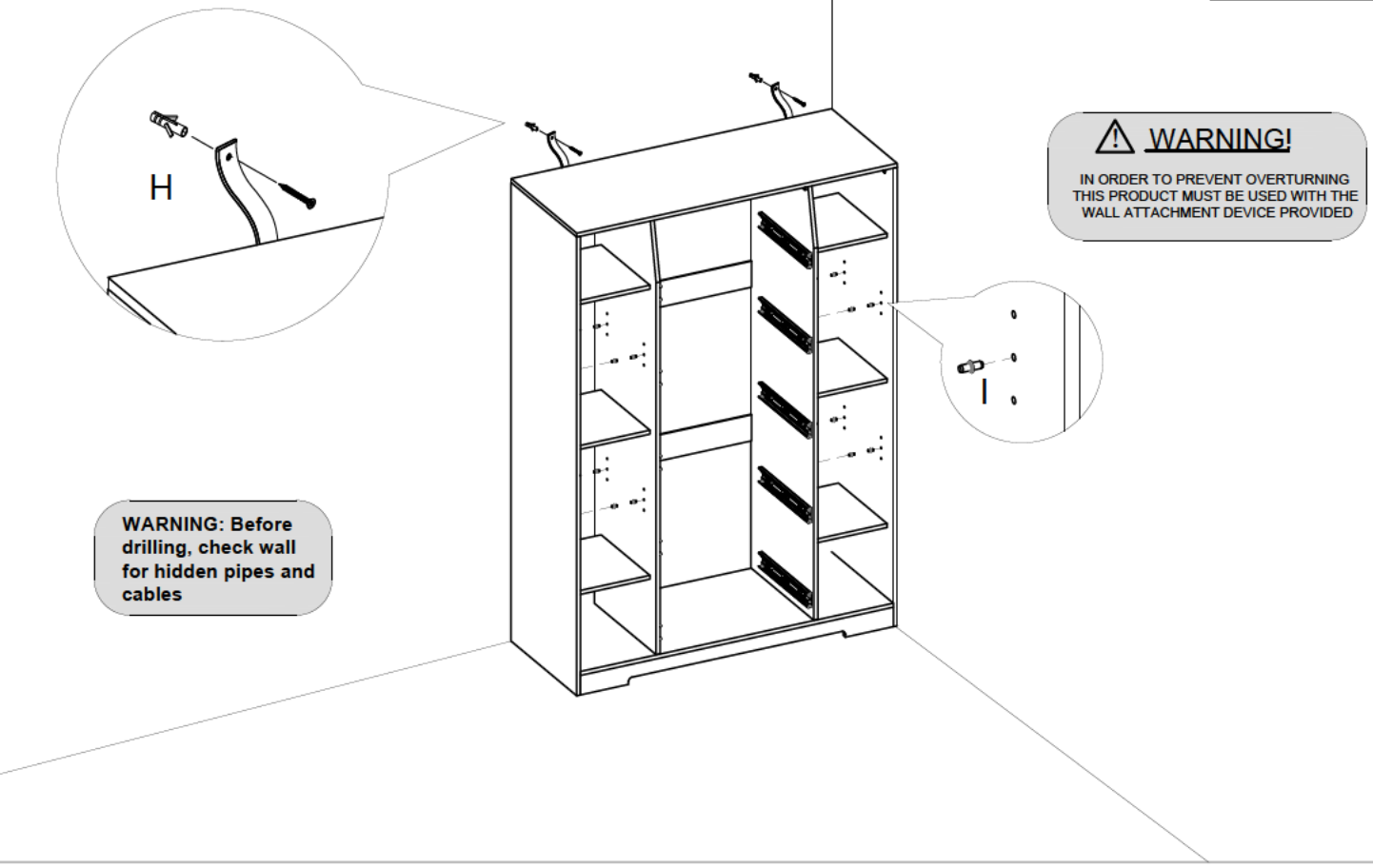

Step 22

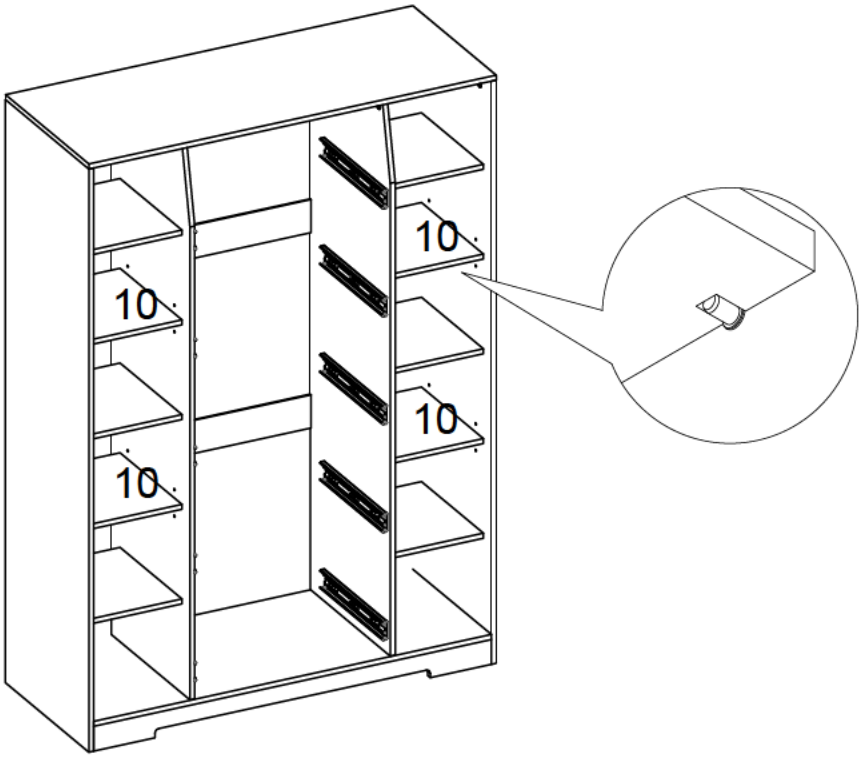

D		20 pcs

Step 23

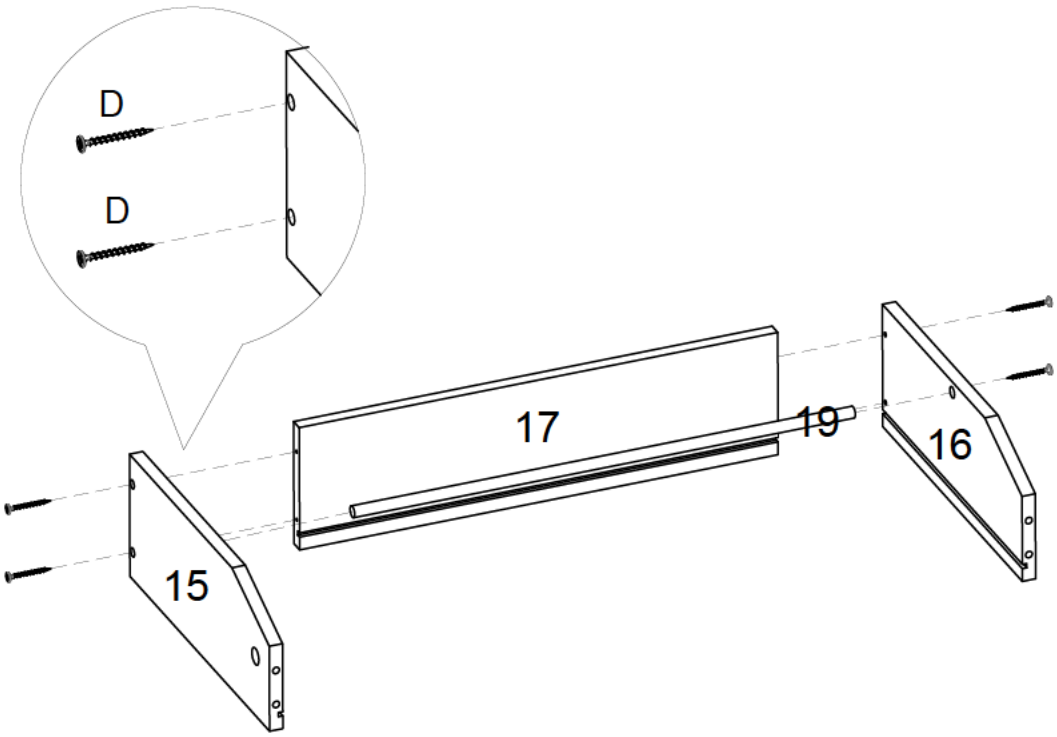

X 5

Step 24

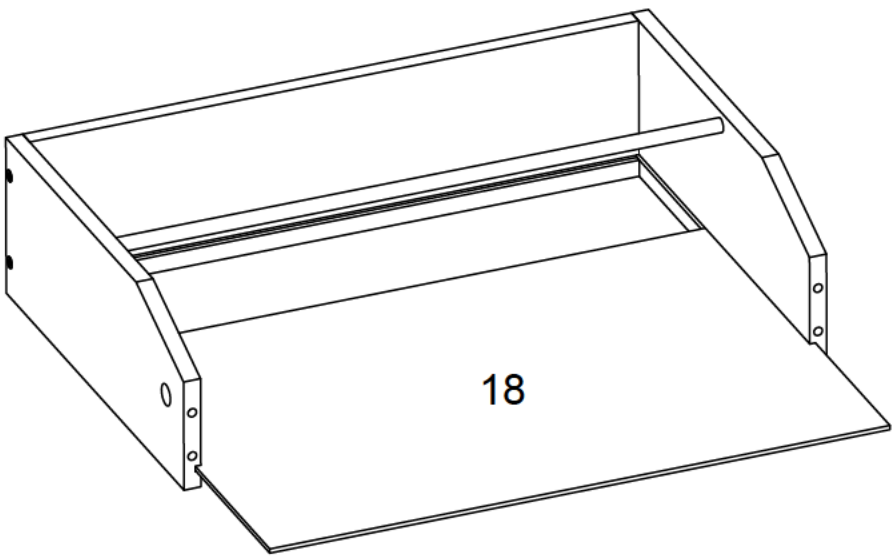

X 5

Step 25

A		10 pcs

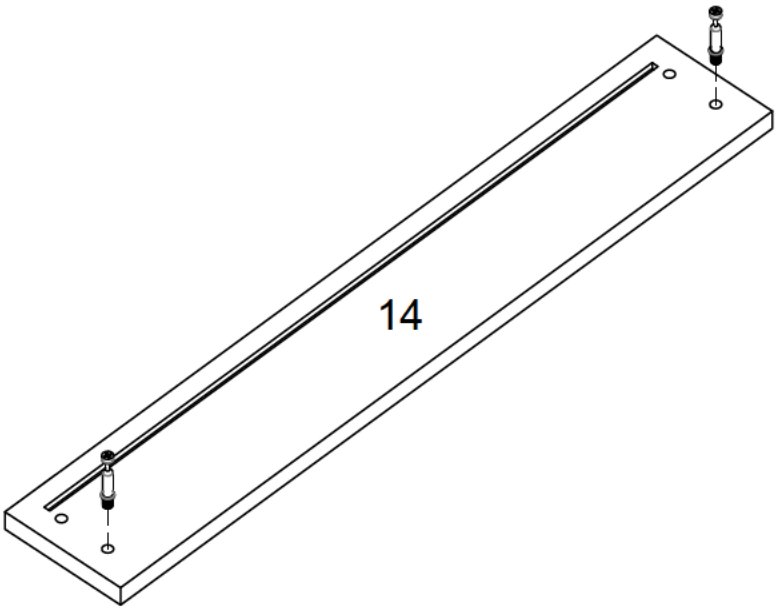

X 5

Step 26

B		10 pcs
C		10 pcs

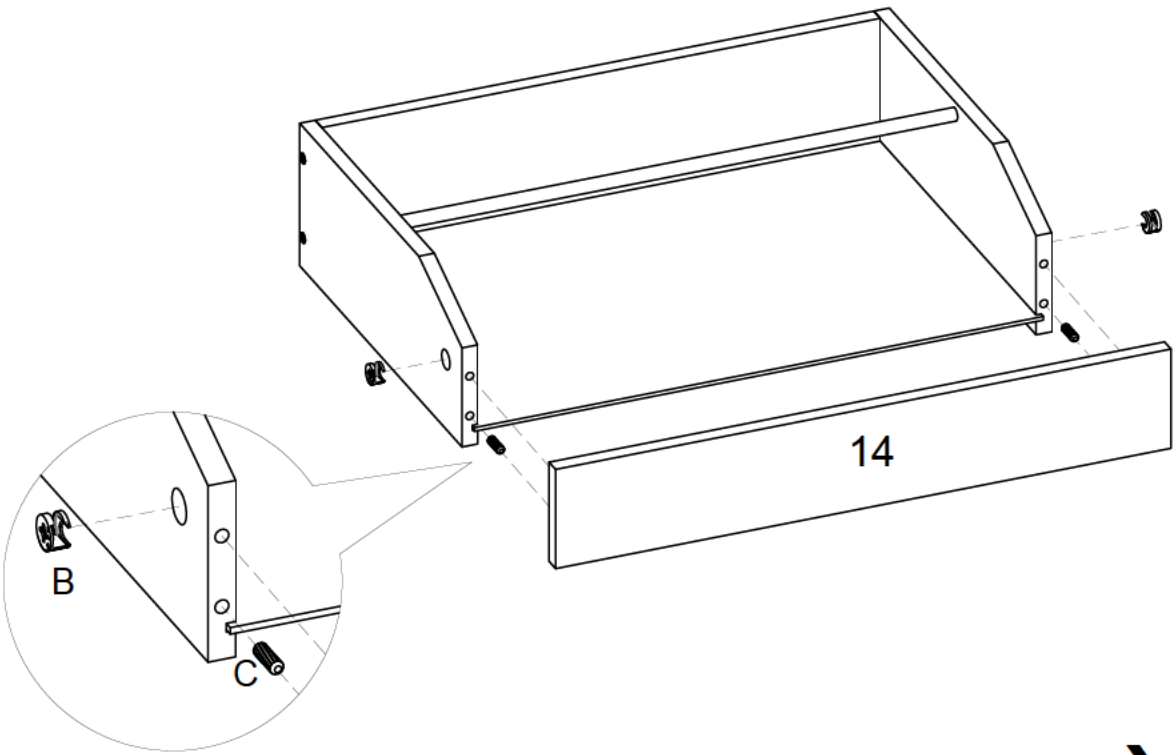

X 5

E		20 pcs
G		10 pcs

Step 27

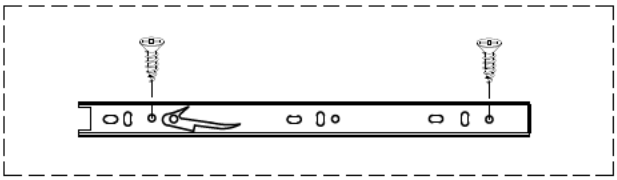

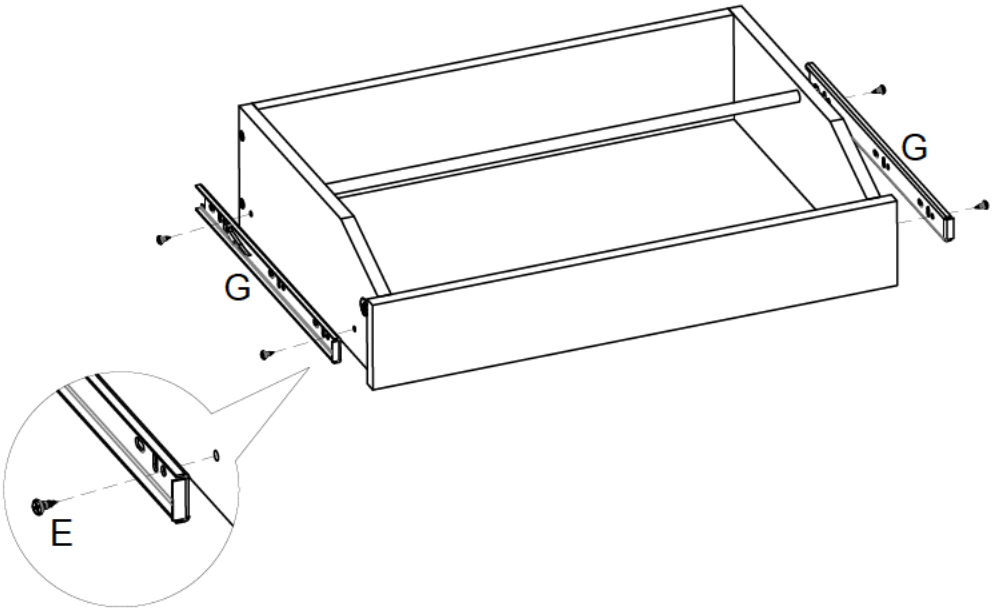

X 5

Step 28

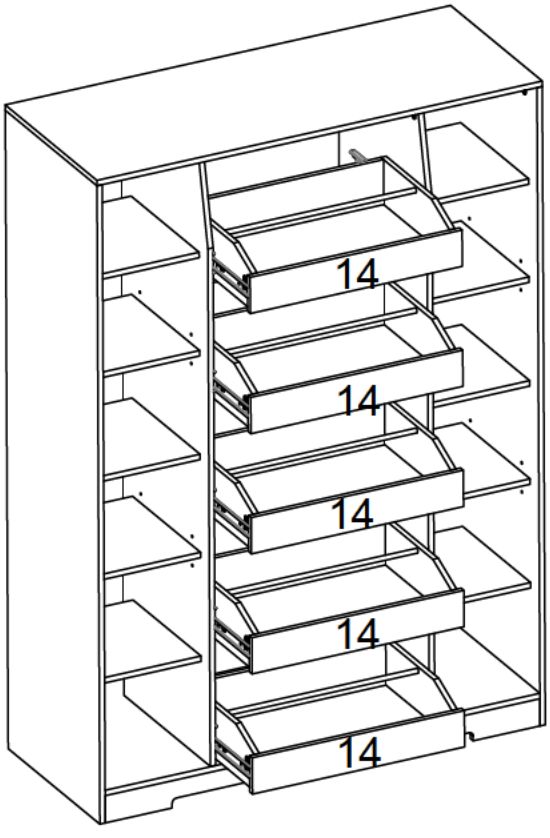

Assembly Instructions

A Guide to Wall Mounting & Fixings

Important notes:

Important: To make sure there is NO hidden wires or pipes inside the walls when drilling.

If plastic wall plugs (rawl plugs) are supplied with your product, eg:

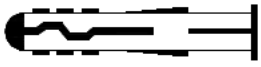

For Block Masonry Walls.

If you have any doubt about the correct wall plugs for your walls, please seek professional advice before assembling.

Make sure that the screws and wall plugs being used are suitable for supporting your unit. Consult a qualified tradeperson if you are not sure.

Hints:

1. General rule: always use a larger screw and wall plug if you are not sure.
2. Ensure you use the recommended drill bit to match the wall plug and hole size.
3. Ensure you drill the hole horizontally; do not force the drill or enlarge the hole.
4. Take extra care when drilling high walls, ceilings and ceramic tiles. Ensure
5. Ensure wall plugs are inserted beyond the thickness of the ceramic tiles to avoid the tiles splitting or cracking.

Types of walls

You can use one of the following types of wall plug if your walls are made of brick, breeze block, concrete, stone or wood.

No. 1 "General Purpose" wall plug

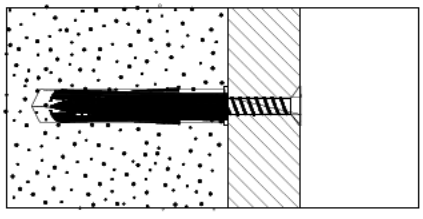

Generally aerated blocks should not be used to support heavy loads,

For light loads, general purpose wall plugs can be used.

No. 3 "Cavity Fixing" wall plug

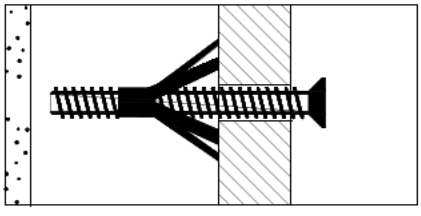

For use with plasterboard partitions or hollow wooden doors.

No. 5 "Hammer Fixing" wall plug

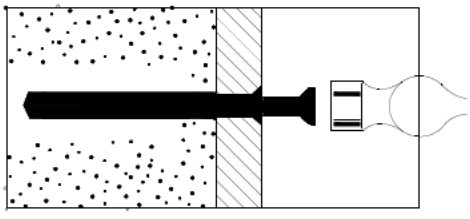

rather than the plasterboard. the retaining wall.

No. 2 "Plasterboard" wall plug

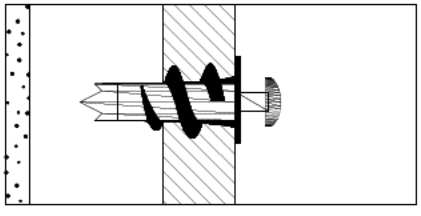

For use when attaching light loads onto plasterboard partitions.

No. 4 "Cavity Fixing - Heavy Duty" wall plug

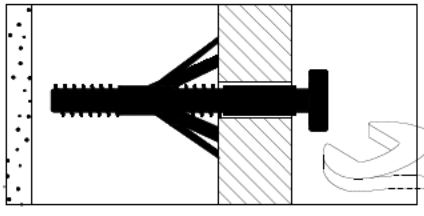

heavy loads such as shelving, wall cabinets and coat racks.

No. 6 "Shield Anchor" wall plug - heavy loads

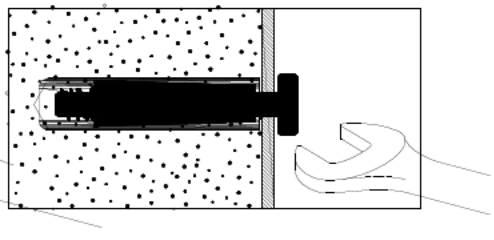

For use with heavier loads such as TV and HiFi speakers and satelite dishes etc.

Care & Maintenance

Safety: Always check the fitting and location to ensure your safety in and around the home.

Fitting: From time to time check the fitting to ensure the wall plugs or screws do not become loose.