7959

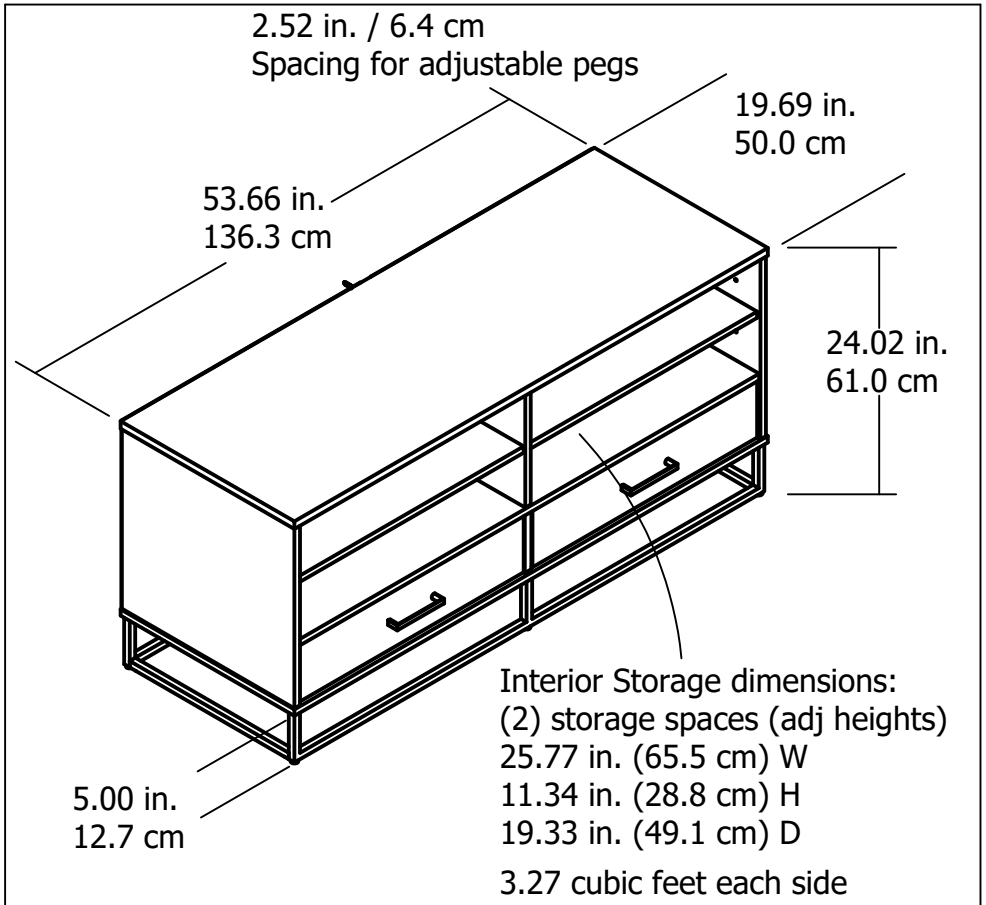

Interior Drawer dimensions:
23.64 in. (60.0 cm) W
3.64 in. (9.25 cm) H
12.97 in. (32.95 cm) D

0.65 cubic feet each drawer

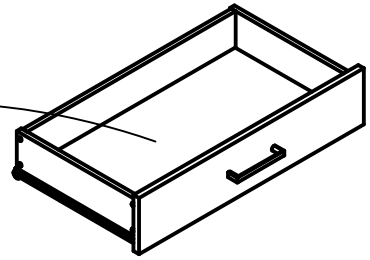

Overall Product Size:
53.66"W x 19.69"D x 24.02"H
136.3cm W x 50.0cm D x 61.0cm H

Wood Breakdown: 90%
Total storage: 7.84 cubic feet

No CRT (tube type) TV permitted.
This item has been designed for most flat panel TV's having up to 55" (139.7 CM) diagonal screen size.

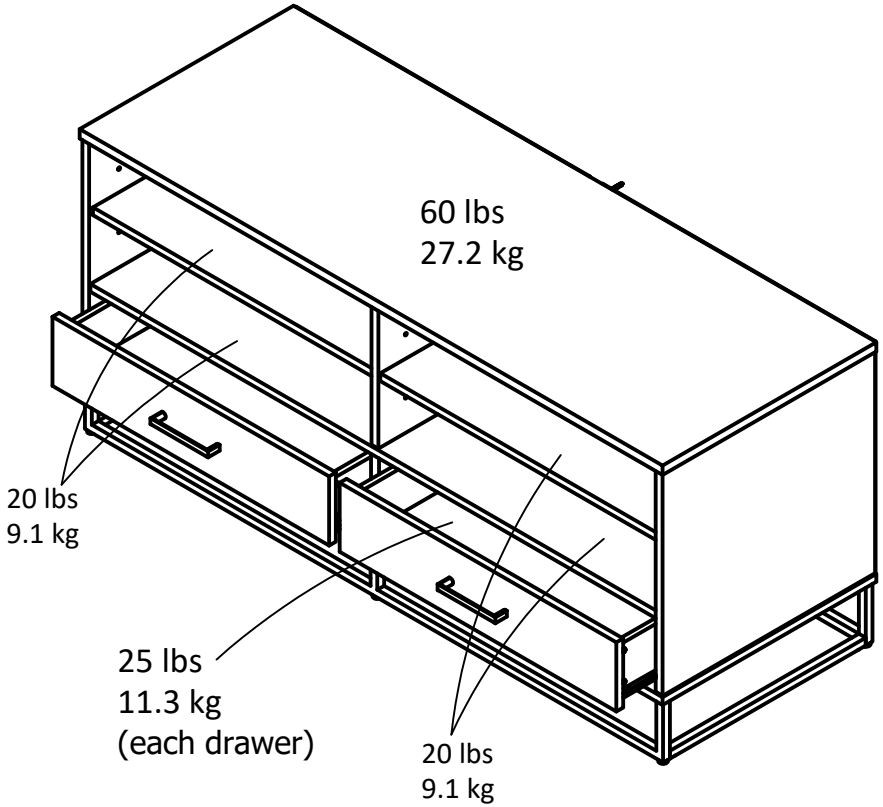

Maximum Weight Capacities
Unit Weight: 103 lbs. (46.7 kg)