Electric Lift Recliner

US-LRC213-SDJ

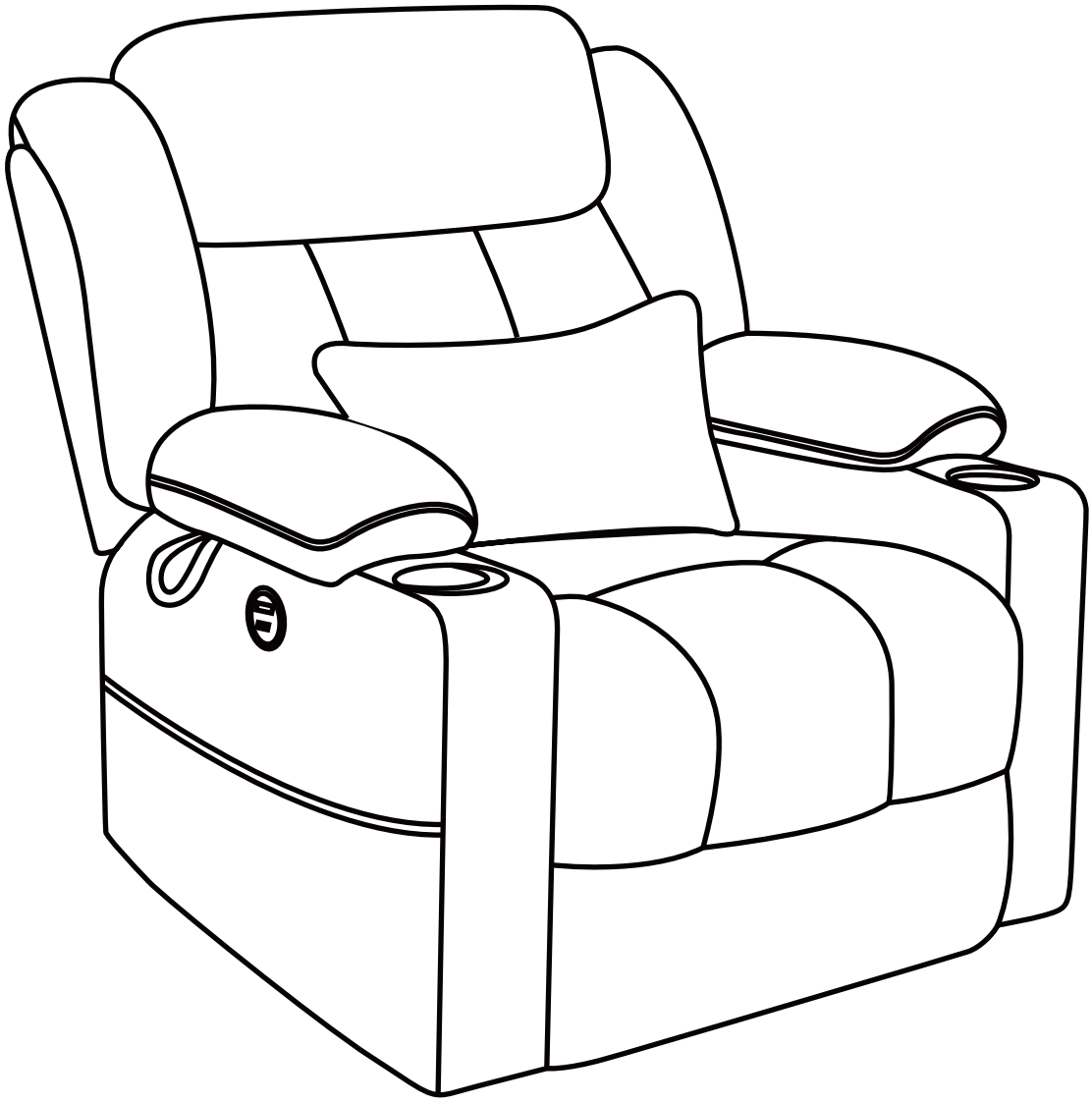

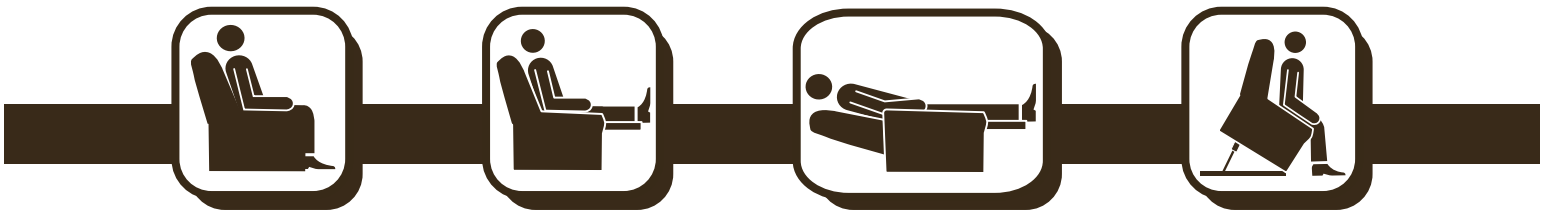

OWNER'S MANUAL

CONTENTS

I **SAFETY GUIDELINES** - 01
1. Mandatory
2. Danger
3. Disclaimer

II **ASSEMBLY INSTRUCTIONS** - 04
1. Product Parameters
2. Part List
3. Assembly Steps

III **OPERATING INSTRUCTIONS** - 11
1. Operation Precautions
2. Lift Remote Operation Instruction
3. Massage Remote Operation Instruction

IV **CARE AND MAINTENANCE** - 15
1. Fabric Care
2. Faux Leather Care
3. Electronics Care
4. Disposal & Recycling

V **TROUBLESHOOTING** - 17

VI **HOW TO REMOVE THE CHAIR** - 23

VII **WARRANTY** - 24

VIII **RETURN / REPLACEMENT POLICY** - 25

I. SAFETY GUIDELINES

1. Mandatory



Please read the safety instructions and other instructions carefully. Failure to follow the guidelines and warnings in this manual and on the product may result in personal injury or product damage and will void the product warranty. Please keep this manual in a safe place for future reference.

2. ⚠ Danger



Electrical Hazards



Do not connect the extension cord to any AC/DC converter or battery charger.



Use a UL listed or UL certified single outlet plug style surge protector with a protection capacity of at least 1000 joules. The surge protector must plug directly into the electrical outlet.



To prevent suffocation, keep plastic bags out of the reach of children.



Do not allow children and pets to play on or near the chair while in use. Serious injury or even death may result if children or pets hide under the chair while it is in motion.



Keep cord out of reach of small children, and do not use where it may be a trip hazard.



Avoid exposing upholstered seating to burning cigars or cigarettes, open flames, and high temperatures.



Do not use this product if it is wet, submerged, or in contact with water or any liquid.



Do not place objects under the chair



Always keep the seat upright and closed. Keep hands and feet away from the mechanism and all moving parts. The footrest must be fully closed before entering or exiting the seat. Only the user may operate the seat.

3. Disclaimer

Please be sure to read and fully understand this manual before using this product. We are not responsible for any damage or injury caused by improper or unsafe use of this product. In particular, we expressly disclaim liability for any personal injury or property damage that may occur during any use that does not comply with applicable federal, state or local laws and regulations.

II. ASSEMBLY INSTRUCTIONS

Notice

- Please read these instructions thoroughly before using.
- Do not plug the power supply in until assembly complete.
- Choose a location for the lift chair that is close to an electrical outlet (2 power outlet required).

1. Product Parameters

Specification	Description
Model No	US-LRC213-SDJ
Rated Voltage	100~240V
Rated Current	2A
Out put Voltage	29V
Package Quantity	3

2. Part List

Notice

• Use our parts only for all replacements.

Box 1 of 3

A Chair Base 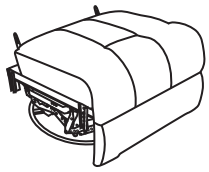	**B** Armrest Cover (L) 	**C** Armrest Cover (R) 	**D** Pillow 	**J** Anti-fall Bracket x2 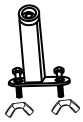
K Power Cord 	**L** Remote Control 	**M** Power Source 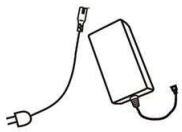	**N** Y-shaped Power Cord 	**O** Lifting Remote Control 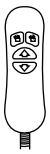

Box 2 of 3

E Left Armrest 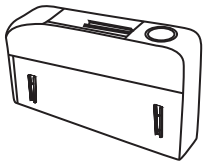	**F** Right Armrest with USB 	**H** Wing(L) 	**I** Wing(R) 

Box 3 of 3

G Backrest

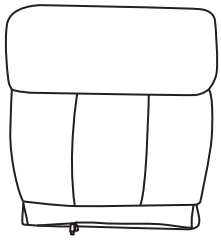

3. Assembly Steps

Step1 - Armrest Assembly

1. Ensure the armrest which has USB charge port is located on right of base.
2. Slide the left and right armrest into the brackets of the base.
3. Press each armrest down as far as it will go (Figure).

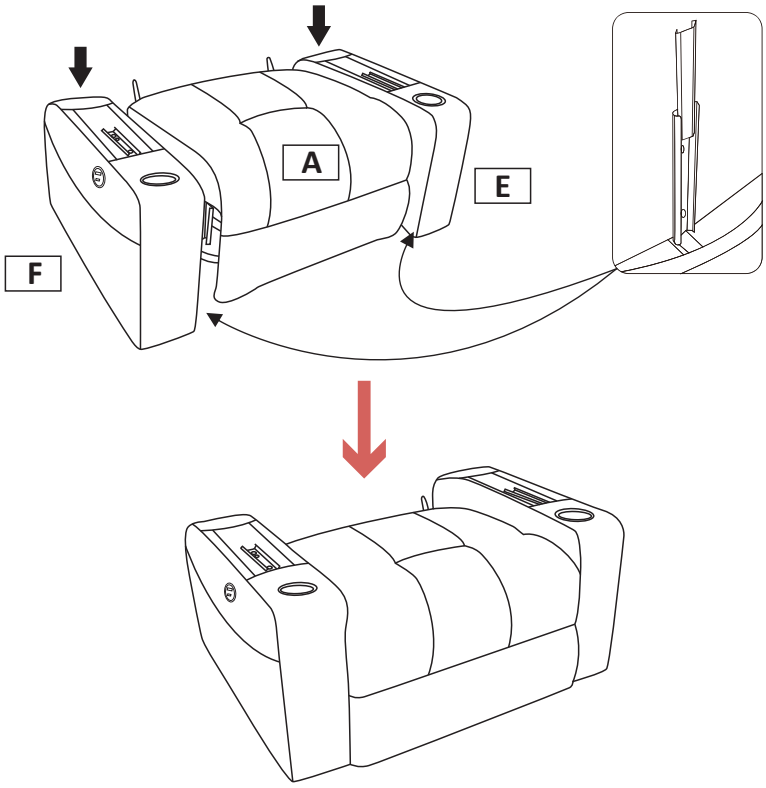

ATTENTION

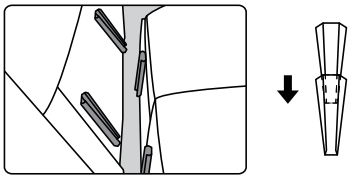

Ensure the two connections on each armrest are all inserted onto the seat tightly.

Step2 - Armrest Cover Assembly

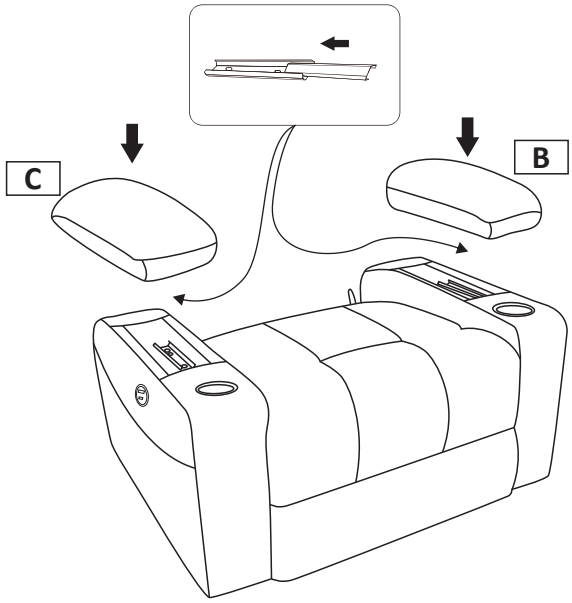

Step3 - Backrest Assembly

1. Align the brackets of backrest at the clips of seat-back (Figure).

2. Push the brackets into the seat-back tightly. Listen for a “click” sound on each side to ensure the backrest is locked in properly.

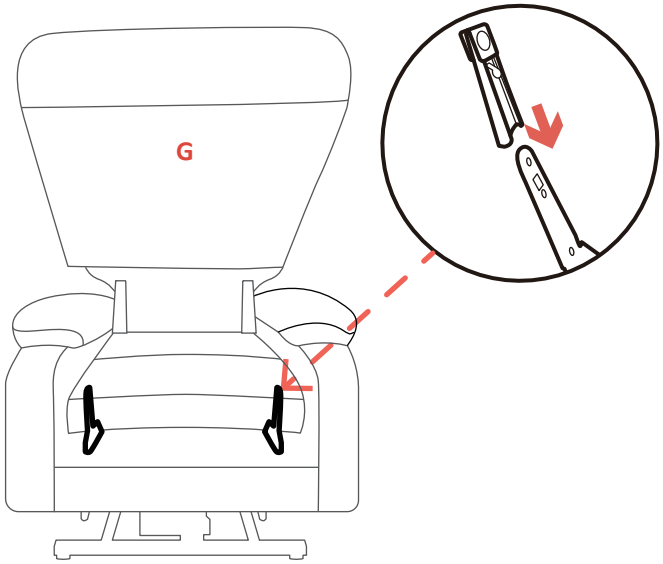

NOTE: Align the slots at the bottom of the backrest with the corresponding protrusions on the chair base. Push the backrest firmly into the base until you hear a click, indicating it's securely in place.

ATTENTION

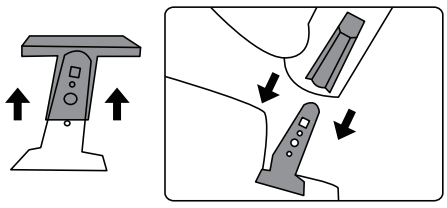

Remove the plastic cap before assembling backrest.

Step4 - Wing Assembly

1.Insert the Connectors on the Wing [I] and Wing [H] into the Connectors on the Backrest Panel[G].

2.Push firmly down on Wings to sure they are fully locked into position.

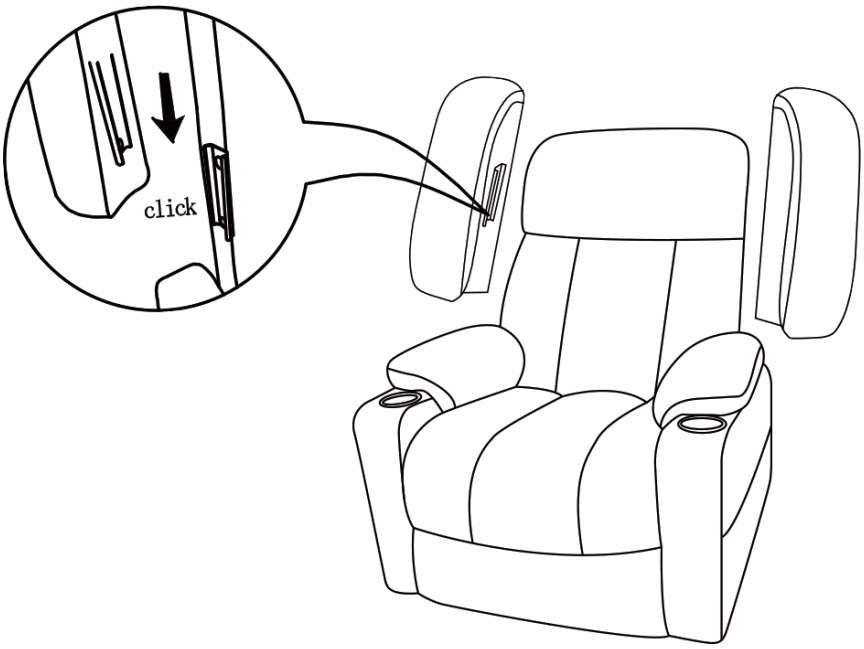

Step5 - Massage Remote Connections

① and ② wire connect with the backrest and chair base.
③ wire connects with backrest and Y-shaped power cord(K).
④ wire connects with backrest and remote control(L).
⑤ wire connects with armrest and USB.

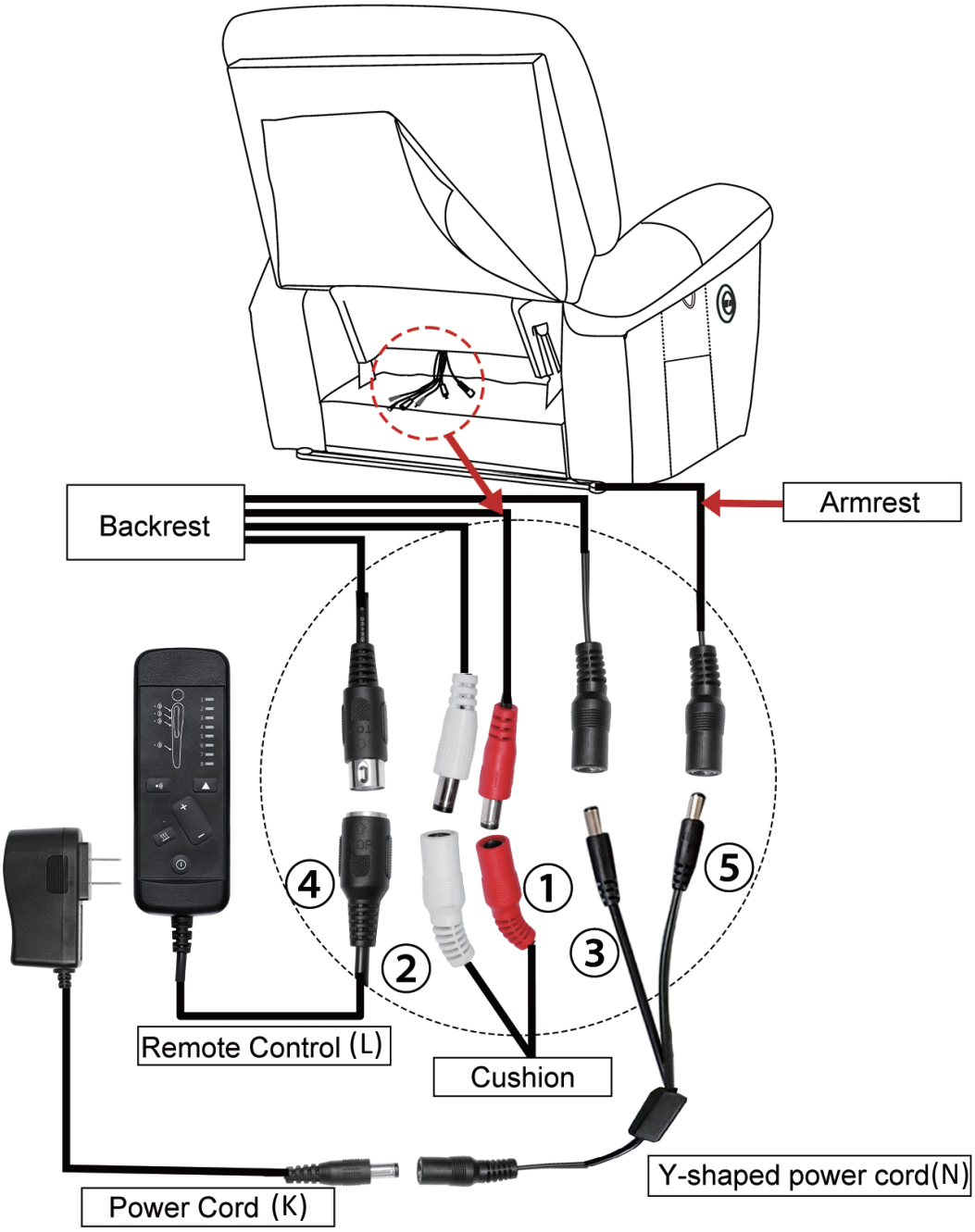

NOTE: 1:Two same color wires connect.
2:Plug power cord and power source into outlet,then you can use all function.

Step6 - Lift Connections

⑥ wire connect the motor and the wire from rightside armrest,which use to connect the control panel.

⑦ wire connect the motor and power source(M).

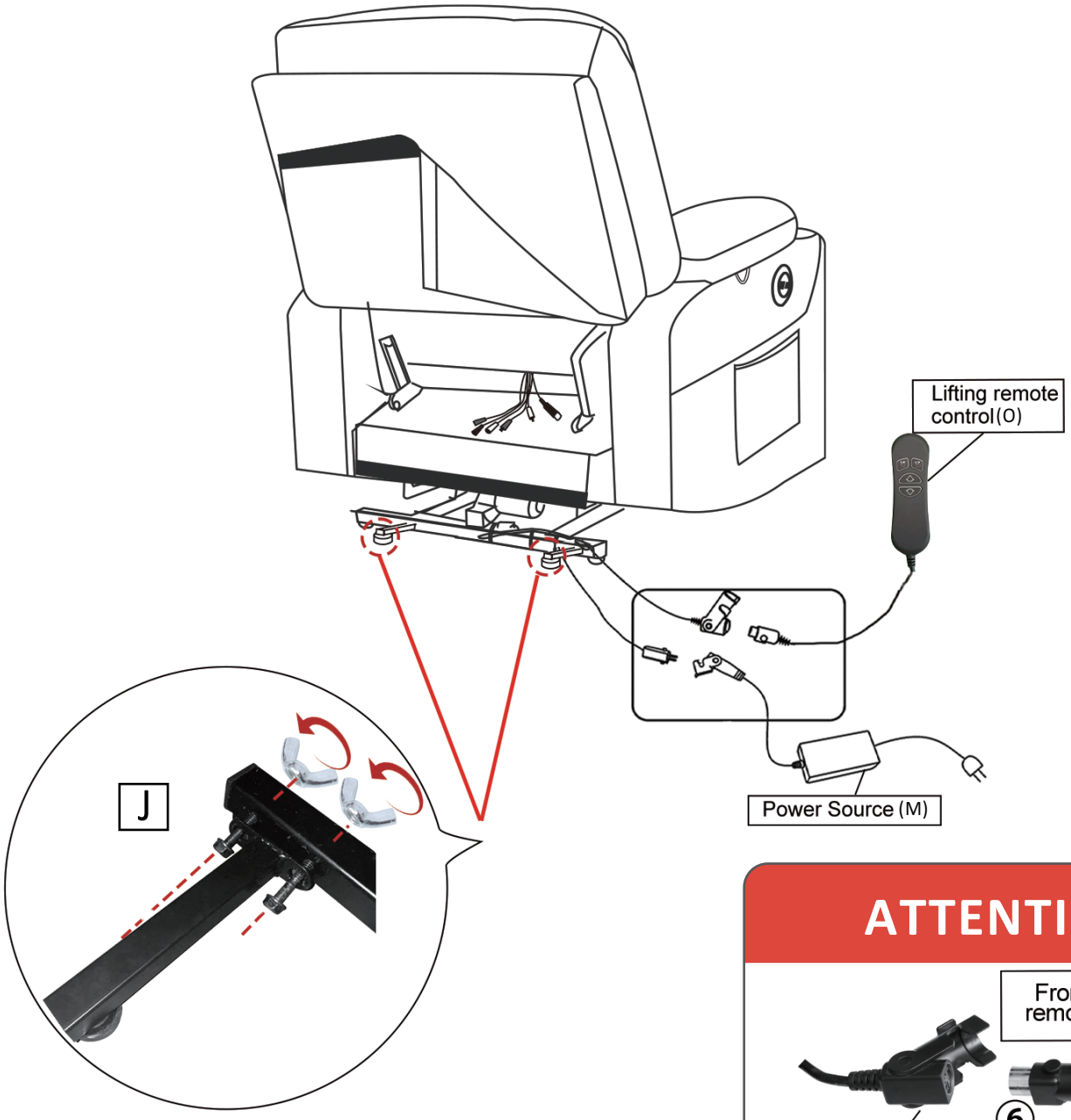

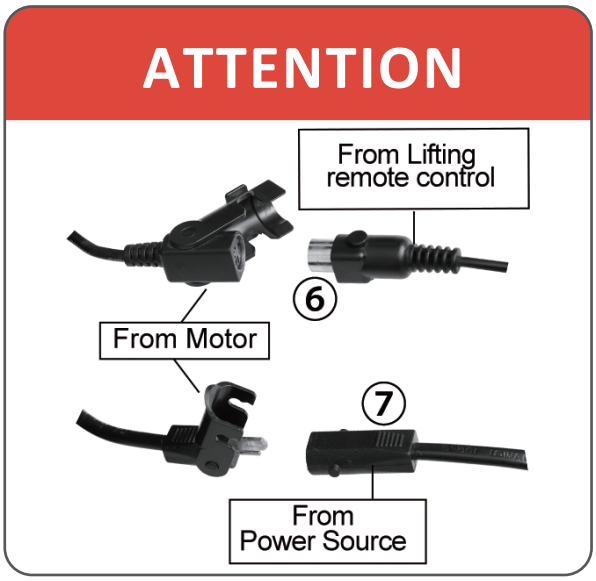

Step7 - Final Check

1. Make sure both metal brackets on each armrest are mounted on the base.
   (There are two metal brackets on each side of the base, it looks like assembly finished when you insert armrest into only one bracket instead of two, however all pressure will apply to one bracket, that is one likely reason that the armrest fall apart from the seat.)

2. Make sure the backrest inserts are locked to the base.
   (Pull up the backrest to check if it is locked in place.)

3. Make sure all wires are connected tightly.

4. Make sure all wires are not placed on the bottom of the rack and will not be pressed by frame.
   (If the wire is pressed by the frame, the wire will be broken by the frame and the chair will stop working.).

5. Make sure the anti-tilt fitting screws are tightened.

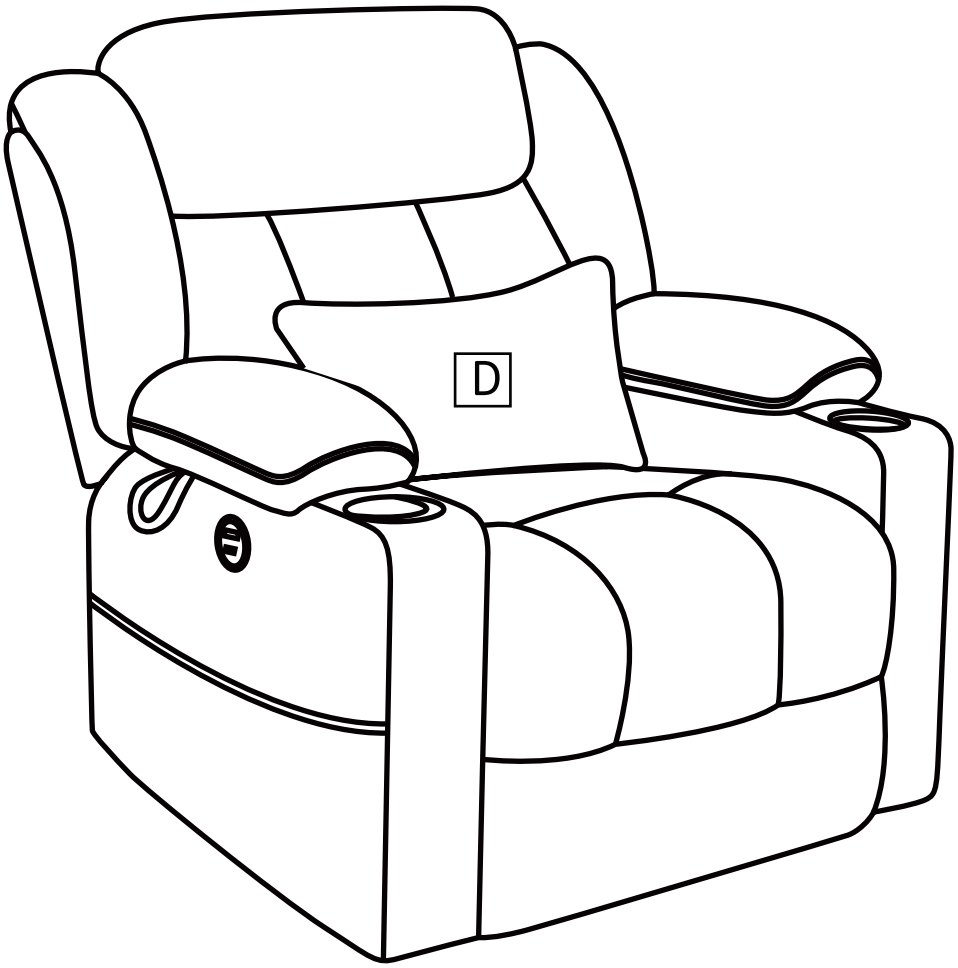

III. OPERATING INSTRUCTIONS

1. Operation Precautions

• Do not use outdoors. INDOOR USE ONLY.
• To avoid tip over, do not put your weight against the back of the chair.
• Do not stand, sit, or place extra weight on the arms, back or open footrest.
• Do not use this product if it is damaged. Do not use attachments or substitute parts.
• Do not use this product if you have poor circulation, are mobility-impaired, or cannot sense heat, except as directed by your health care provider.
• Do not operate the unit until the back is installed and locked.
• Do not attempt to disassemble or repair the actuator or pump; no serviceable parts are inside.
• Do not allow electrical cord to be pinched between moving parts or between the frame and the floor. Do not place cord under carpet or in a location where it could become worn.
• Do not use pillow, blanket, or other cover between occupant and chair surface when heat is engaged.
• Do not attempt to disconnect the power plug by pulling the power cord. Always hold the power plug and pull it out.
• Closely supervise children and disabled persons using this product.
• To reduce the risk of head entrapment and other injuries, keep children and pets away from openings and moving parts in and around furniture.
• Unplug power cords from outlet before relocating or troubleshooting.
• This product has many moving parts, serious injury can occur if not used properly. Keep hands, fingers, and body parts away from the mechanism.
• To exit the unit safely and prevent a tripping hazard, bring the back upright and close the footrest.

- Place tables and area rugs at a distance to allow the footrest to fully extend without rubbing or interference.
- Check the condition of the power supplies, electrical cords, plugs, and connectors often. Keep the power supplies and electrical cords away from heat sources. Never operate the unit with a damaged power supply, electrical cord, plug or connector.
- This product is not intended for use as a health care device. Some medications and physical limitations may impair your ability to operate this product in a safe manner. Consult your physician if you are taking prescribed or over the counter medication, or if you have physical limitations.
- Do not charge your device into the USB charge ports over 24hours.
- Do not charge any devices over 5V/2A with the USB charge ports.
- Do not overlay the USB charge ports with other heat-dissipating electronic products. This may prevent heat dissipation and cause overheating or melting.
- Users of medical devices should contact their health care provider before using this product.
- Unplug the power cord immediately if you detect strange odors or fumes coming from the chair. Contact your Customer Support.
- Burns may result from improper use and care of internal heating parts. To avoid risk of burns, do not use pins, do not allow heating pad area to become wet, and do not remove upholstery cover.
- If you give this product to someone else, must include this owner's manual.

2. Lift Operation Instruction

INFINITE POSITION

Adjust the backrest and footrest independently to a full reclining position



3. Massage Remote Operation Instruction

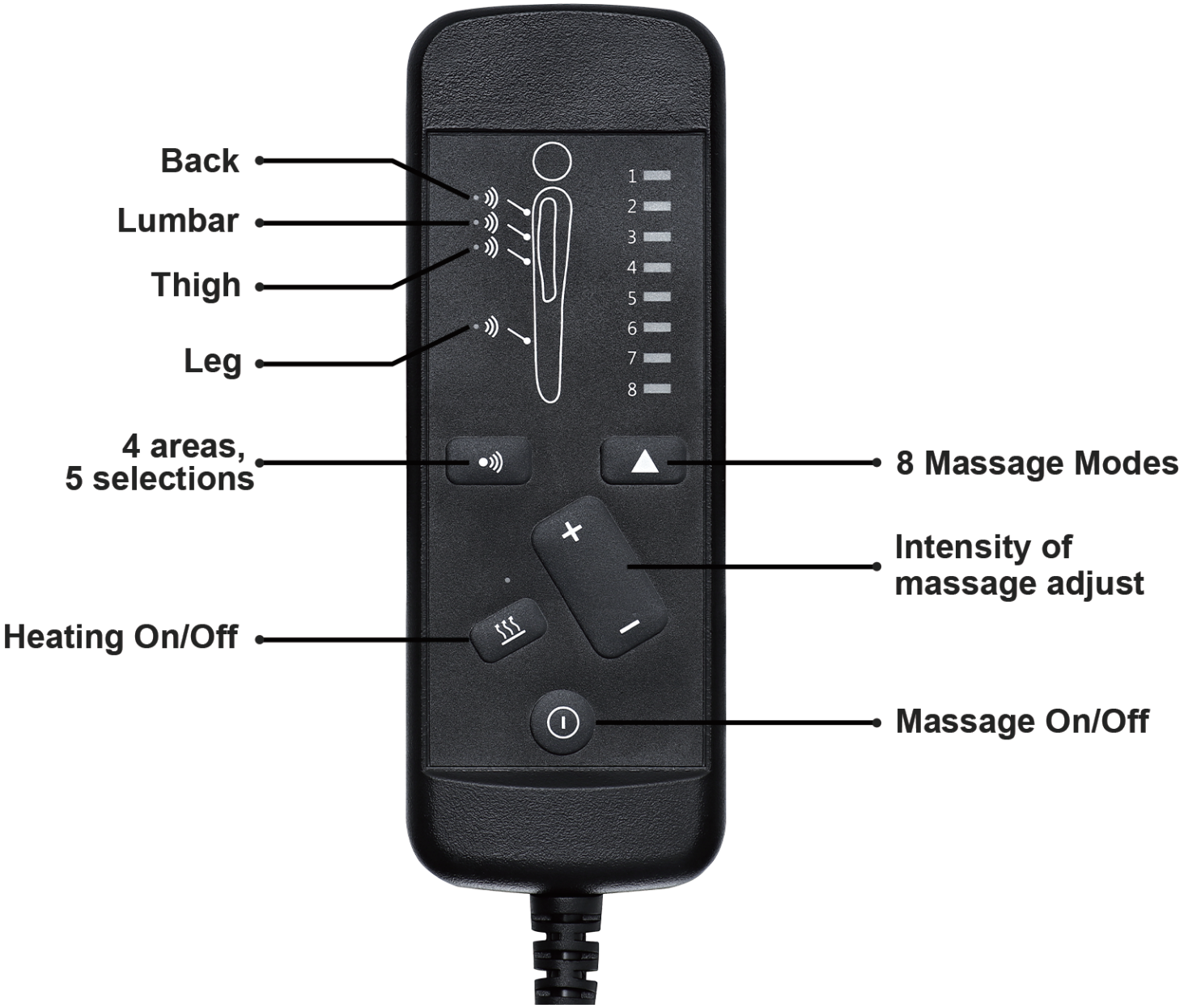

● **Heating Safety Tip:** For optimal warmth and safe operation, do not place pillows, blankets, or any other coverings between yourself and the seat surface while heating.

● **Timer Setting:** The massage function automatically defaults to a 15-minute cycle upon powering on.

IV. CARE AND MAINTENANCE

Your product will provide years of superior performance and satisfaction with regular care and maintenance. To maintain the finish quality of your "assistant", please follow the guidelines and cleaning procedures provided below.

■ Notice

- Do not place your chair in direct sunlight, as sunlight causes fading.
- Do not smoke cigarettes while sitting in or using your chair.
- Avoid extreme changes in temperature by arranging chair away from radiators, heat and air vents.
- Do not use solvent-type cleaners to spot clean.
- Do not saturate fabric.
- Please be careful that pet scratch may cause fabric or leather break.

1. Fabric Care

● Inspect the fabric on a regular basis for any pulls, tears, or gaps.

● Frequent vacuuming or light brushing with a nonmetallic, stiff bristle brush to remove dust and grime is recommended.

● When liquid spills onto the fabric, please immediately wipe off liquid spills with a dry or lightly dampened clean white cloth, sponge, or paper towel.

2. Faux Leather Care

● Wipe leather down regularly with a clean, dry microfiber cloth.

● For more stubborn dust, dampen the cloth with distilled water. Make sure that the cloth is not soaking wet. Never let water soak into leather.

● Always be sure to use a soft cloth and never use an abrasive brush or scrubber as this can scratch and damage the leather.

3. Electronics Care

● Inspect all wiring harnesses to make sure they are not damaged or stuck under chair.

● Keep all the electronics free from moisture and temperature extremes.

● Check electrical components frequently for signs of corrosion and replace as necessary.

● Contact Seller if damage is present, do not fix it by yourself.

4. Disposal & Recycling

Your power recliner sofa must be disposed of according to applicable local and national statutory disposal regulations. Contact your local waste disposal agency for information on proper disposal of recliner sofa packaging, metal/wood frame components, fabric, electronic components.

V. TROUBLESHOOTING

The following troubleshooting FAQs should summarize what you need to know about your power recliner sofa. If at any time you do not feel comfortable performing the trouble-shooting steps listed in this manual, please contact the customer service.

Questions	Answers
What if my lift chair does not operate at all?	• Make sure all the connections at the bottom of the chair are secured; refer to the Assembly Instructions. • Make sure the **GREEN** light of the lift remote is on. • Check if the **GREEN** light on the power adapter is on.
What if the massage and heat do not work?	• Make sure the light of the massage remote is on. • Check whether the USB light is on to determine whether there is a problem with the connecting box. • Check all the electrical cords are not crimped or pinched. • Check if the **GREEN** light of the power adapter is on.
What if the USB charge ports do not work?	• Check if the **GREEN** light at the power adapter is on. • Make sure the USB cable coming out of the right armrest is properly connected to the connecting box behind the bottom of the chair; refer to the Step 3 lift connection in the "Assembly Instructions".

Questions	Answers
What if my lift chair is wobbly?	• Check the base of chair to make sure all the rubber seat retainers are not broken. • Make sure the armrests are installed tightly; refer to the Assembly
What if the armrest falls apart from seat?	• Ensure the two connections on each armrest are all inserted onto the base tightly. • Check the brackets of armrest and base to ensure there is
What if my lift chair makes a clicking noise?	• Check the lift motor and make sure the end of lift motor at the center of pivot point. • Make sure the weight capacity of 350 Ibs has not been exceeded.
What if my lift chair tilted to one side?	• Check the brackets of backrest are installed into seat tightly. • Make sure the rack of lift chair is in a good condition without any distortion. • Use lift chair on the flat carpet, not smooth floor.
What if the remote is very hot?	• Check all wiring harnesses to make sure they are not damaged or frayed. • If all cords are in a good condition, please unplug the remote and cool it for a while before using it. • If there is a burning smell, unplug the remote and contact customer service support to replacement.

NOTE:

If the lift recliner still does not operate properly, please contact the customer service for help and never attempt to make any repairs or adjustments yourself.

Lift Motor Replacement:

NOTE:

1. Take an original bottom picture for reference before disassembling.
2. The disassembled small parts need to be put away to prevent falling into the rack.

Can scan QRCODE to watch video demonstrations

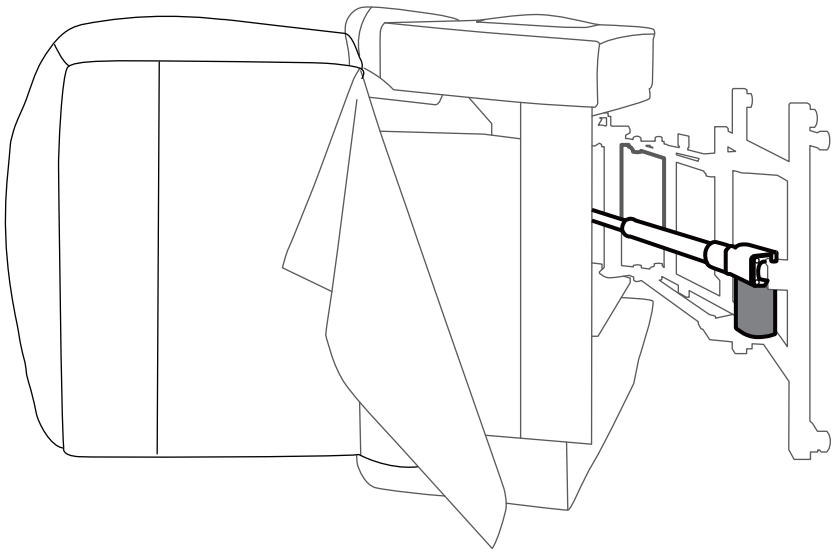

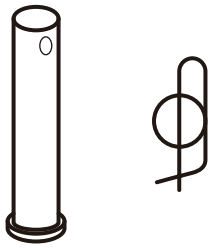

Step1 - TURN THE CHAIR TO THE LEFT

First turn the chair to the left, the right armrest is upward, be careful not to break the wire of USB charge ports.

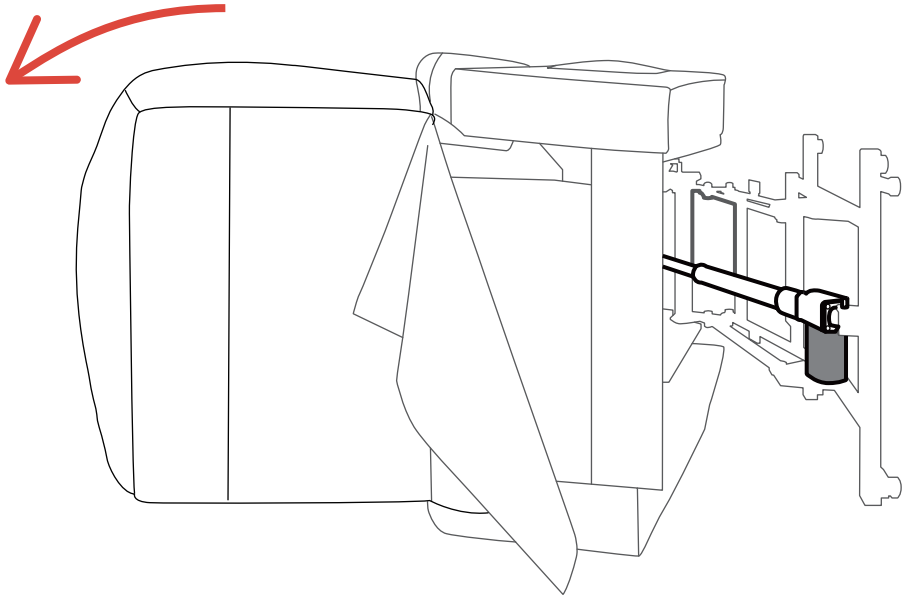

Step2 - Remove Bolts

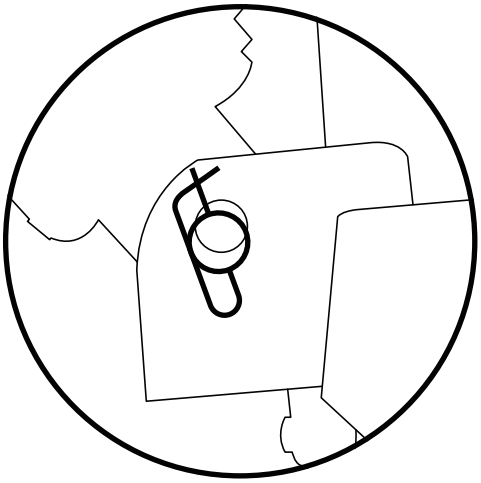

(1) The original position of the paper clip

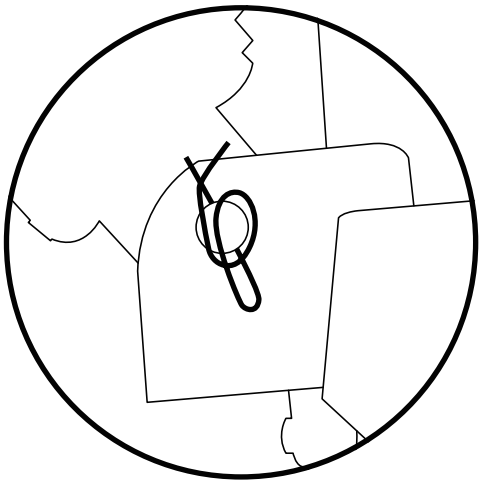

(2) Twist the paper clip

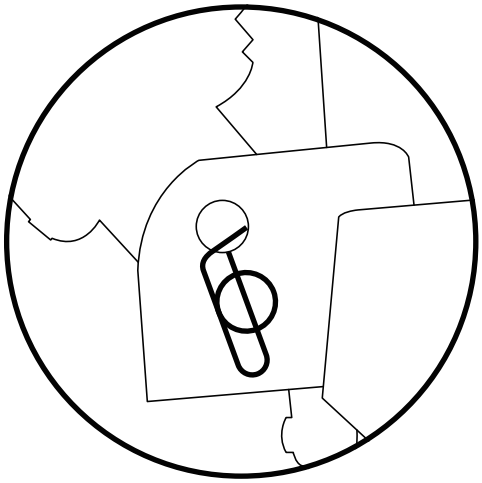

(3) Pull out the paper clip

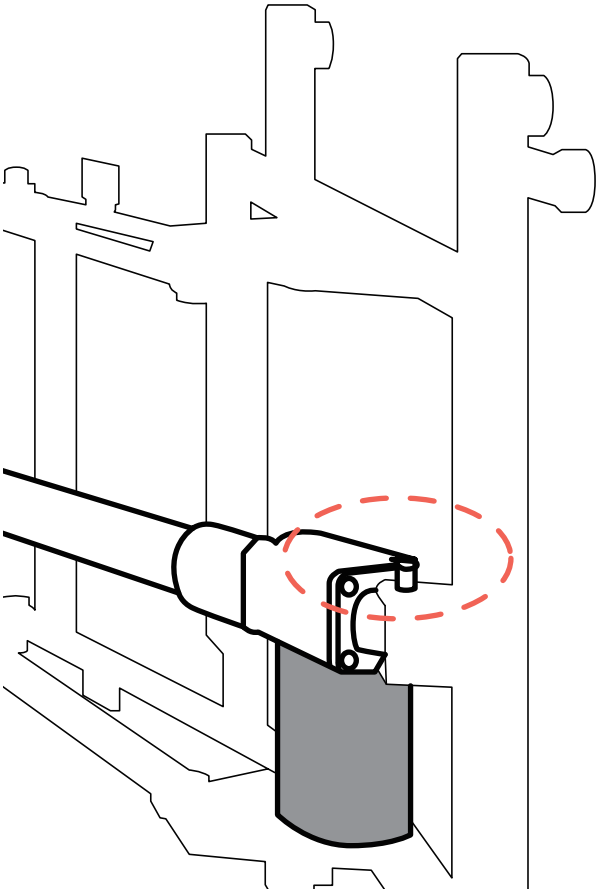

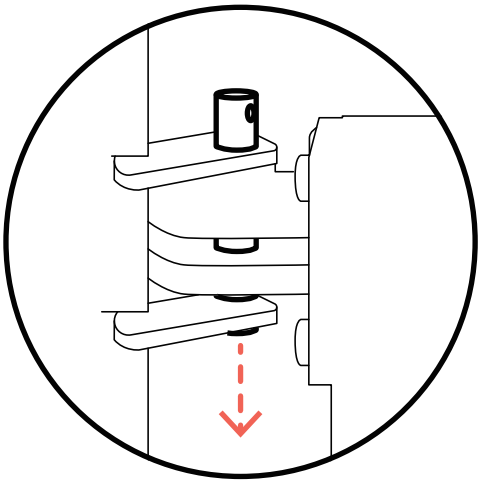

(4) Pull out the bolt

Step3 - Remove Old Lift Motor

Repeat “Step 2” with the other end of the lift motor.

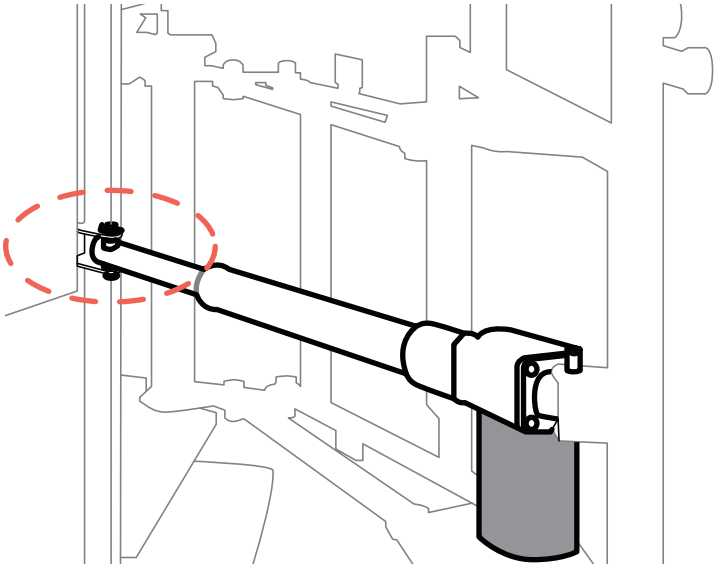

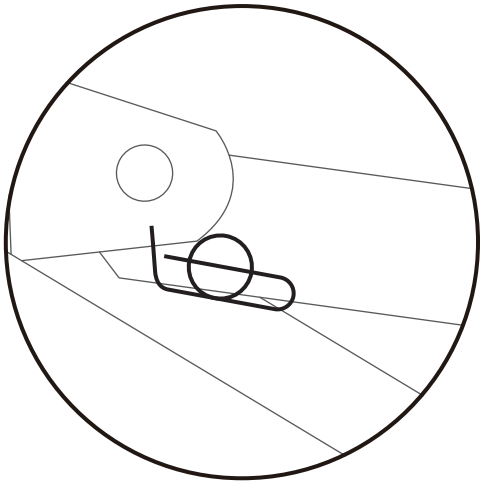

Step4 - Replace the New Lift Motor

Replace the new lift motor.

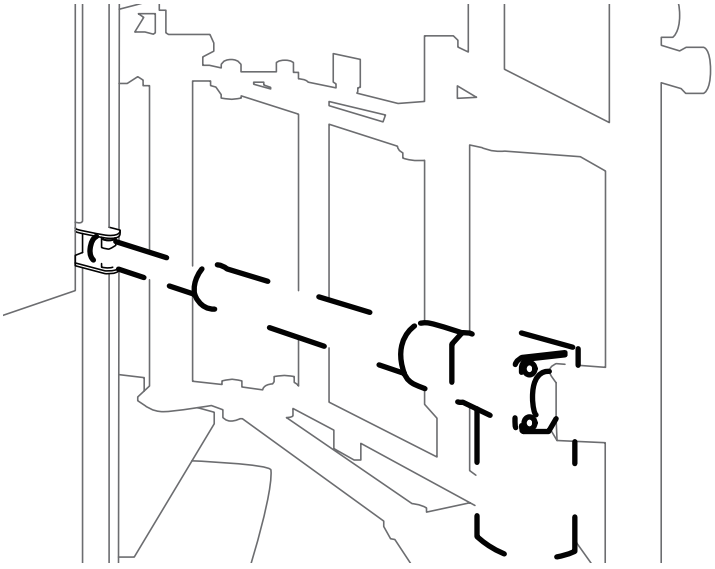

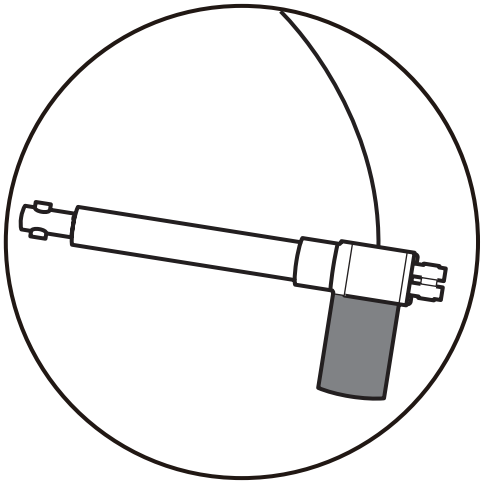

NOTE:

Please note that the motor of the lift motor is facing ground, be careful not to install it backwards, otherwise the lift motor will break.

Step5 - Install Bolts

Insert bolts and paper clips at both ends of the lift motor.

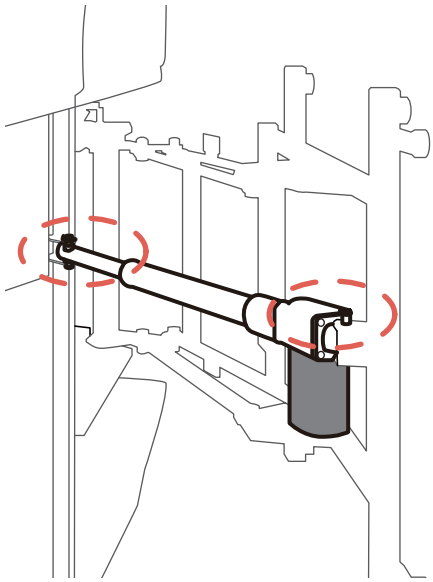

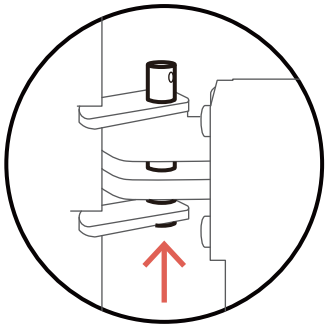

1. Insert the bolt

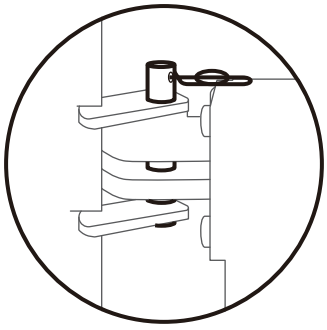

2. Insert the paper clip

Step6 - Final Check

Check & Confirm

1.Make sure bolts and paper clips are fully inserted.

2.Make sure the lift motor is installed in the correct direction.

3.Make sure the wires are not crushed by the seat frame.

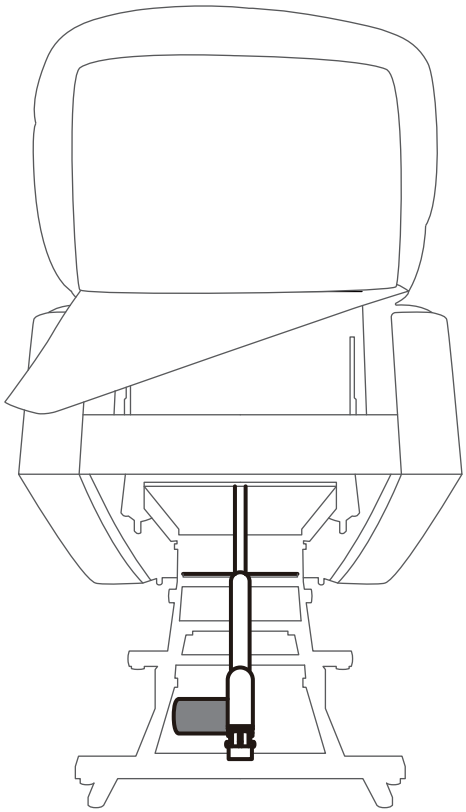

VI. HOW TO REMOVE THE CHAIR ?

Please note that you need to take apart the backrest before removing the arms.

■ **Notice**

• Note: Push the armrest inward to reduce friction between the inserts, then shake the armrest left and right and lift it up

1. Force apart the buckles while take the backrest out from the arms.

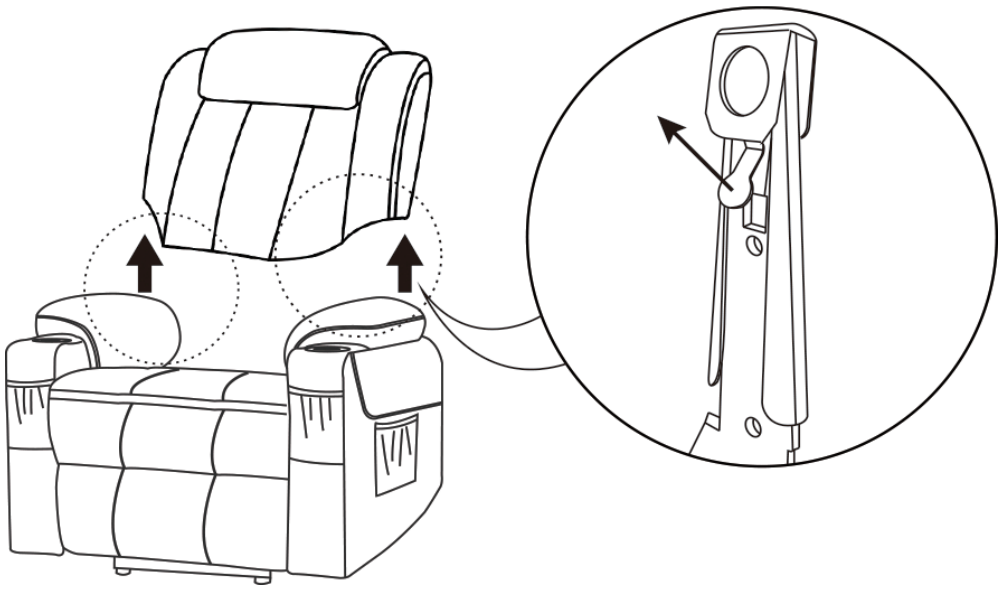

2. Then pull out the arms from the base

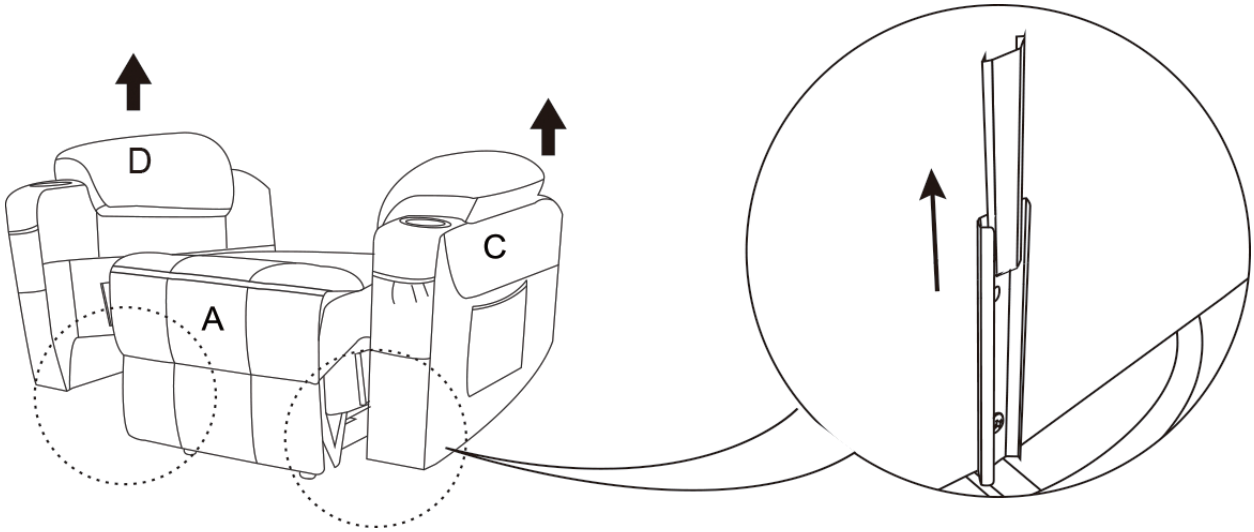

VII. WARRANTY

■ Notice

- For product beyond the limited manufacturer warranty period and scope, we can also provide replacement service, but a basic charge will be charged according to the circumstances.
- The warranty only applies to our products and does not include any accessories or enhancements.
- Warranties are only valid in the 48 contiguous United States and are contingent upon the consumer operating the product according to the corresponding instruction manual.

Reclining Mechanism	**★ 1 Year**
Upholstery Material	**★ 1 Year**
Metal/ Wood Chair Frame	**★ 1 Year**
Electronic Parts	**★ 1 Year**

CONSUMER WARRANTY LIMITATIONS AND EXCLUSIONS

All warranties begin on the date of delivery.

- We will replace the defective parts or send replacement product provided that the warranty parts have not been subjected to misuse, abuse or improper service by the consumer, for example, damaged wire arising in consequence of negligence or improper operation.
- Exclusions also include components with damage caused by:
  - Contamination
  - Abuse, misuse, accident, or negligence
  - Commercial use, or use other than normal
  - Improper operation, maintenance, or storage

NOTE:

We will pay standard shipping rates on all warranted parts for the first year. We can also sell you replacement part for a discount price when your product is out of warranty policy.

VIII. RETURN/ REPLACEMENT POLICY

■ **Notice**

Why don't we recommend returning the item by yourself?

- Huge cost- UPS/FedEx oversize fee.
- Need you to take the box to UPS/FedEx facility.

Return/ Replacement Policy

You have 30 days from the date of purchase to return any item purchased from our store.

Please securely pack the item in its original packaging, including any accessories or manuals that came with the product. To initiate a return, please contact our customer service team .

Return Conditions

We accept the return of items that are in new, unused condition, with original tags attached and all original packaging and other components included. Refunds will be issued in the original form of payment for the price of the item, including taxes.

NOTE:

- Please keep the original packaging in case the product needs to be returned. If the original packaging is not available, the newly found packaging needs to meet the following size standard: UPS/FedEx packaging size standard: (width+ height) ∗ 2+ length< 123 inch.
- Please disassemble the product before you return it, otherwise there will be a huge cost as oversized and it could even exceed your order amount.
- Please do not purchase return label for a damaged/defective product by yourself.
- If you have any problem to return the product, please contact us immediately, we will do our best to help you with a reasonable solution.